DESPIECE TECNICO

Cocinas a Gas
Fourneaux à Gaz
Gas Ranges
Cucine a Gas
Fogões a Gás
Gas-Herde

GAMA 700

Modelos:

CG7-20
CG7-40
CG7-60
CG7-41
CG7-61
CGE7-41

Mayo 2008 May

Revisado Mayo 2010

FAGOR

Fagor Industrial

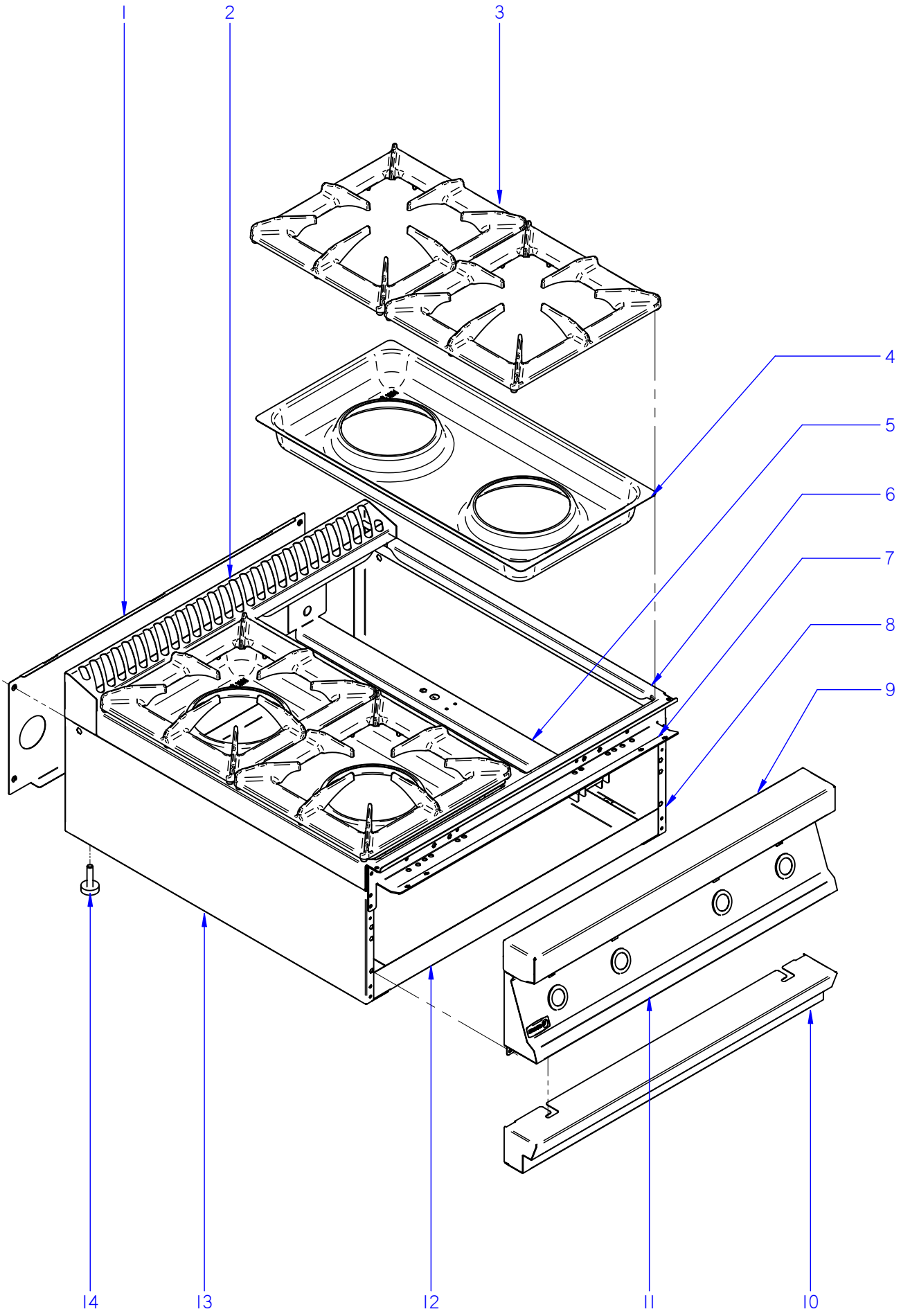

ITEM MARCADO EN COLOR = REPUESTO RECOMENDADO
COLOURED ITEM = RECOMMENDED SPARE PART

N plano	Firma	Fecha	Aparato	MUEBLE	Lamina	
C-2050		2008-05	COCINAS CG7-20; CG7-40; CG7-60		1	Fagor Industrial S.Coop. FAGOR Oñate

MOD.	COCINAS	ZONA	MUEBLE	PLANO	C-2050

ITEM	CODIGO	DENOMINACION	TEXTO	CG7-20	CG7-40	CG7-60					NOTAS
1	H602804000	PANEL POSTERIOR SU. G700 1/2M	SUP REAR PANEL G700 1/2M	1	_	_					
1	H602808000	PANEL POSTERIOR SU. G700 1M	SUP REAR PANEL G700 1M	_	1	_					
1	U932813000	PANEL POSTERIOR SU. G750	SUP REAR PANEL G750	_	_	1					
	Q419005000	REMACHE 4X8 ALMG3 / ALUMINIO	RIVET 4X8 ALMG3 / ALUMINIUM	4	4	4					
	X010503000	CIERRE MUELLE	LOCK SPRING	3	4	4					
	Q419007000	REMACHE TUBULAR C/V D3.2X6	TUBULAR RIVET C/V D3.2X6	6	8	8					
2	H125404000	EMBELLECEDOR POSTERIO. 1/2M	REAR TRIM. 1/2M	1	_	_					
2	S565401000	EMBELLECEDOR POSTERIOR 1M	REAR TRIM 1M	_	1	_					
2	U915406000	EMBELLECEDOR POSTERIO. 1,5M	REAR TRIM 1,5M	_	_	1					
3	U915413000	PARRILLA DE MESA (G 700)	TABLE GRILL (G 700)	2	4	6					
4	U915407000	BACINETA QUEMADORES G 700	BASIN BURNERS G 700	1	2	3					
5	U915408000	LISTON SOPORTE QUEMA G 700	BURNER SUPPORT STRUT G 700	1	2	3					
	Q221342000	REMACHE EXAGONAL M5	HEXAGONAL RIVET M5	4	8	12					
	Q152004000	TORNIL. APLASTADO M5X13 A 304	FLAT HEADED SCREW M5x13 A 3	4	8	12					
6	U915410000	MESA COCINA 1/2 M G 700	KITCHEN TABLE 1/2 M G 700	1	_	_					
6	U915411000	MESA COCINA 1 M G 700	KITCHEN TABLE 1 M G 700	_	1	_					
6	U915405000	MESA COCINA 1 1/2 M G 700	KITCHEN TABLE 1 1/2 M G 700	_	_	1					
	Q012031000	TORNILLO EXAGONAL M5X10 A.304	HEXAGONAL BOLT M5X10 A.304	4	4	4					
7	H602602000	ESCUADRA AMARRE ANTER. 1/2 M	FRONT FASTENING BRACKET 1/2	1	_	_					
7	H602603000	ESCUADRA AMARRE ANTER. 1 M	FRONT FASTENING BRACKET 1	_	1	_					
7	U912603000	ESCUADRA AMARRE ANTER. 1,5 M	FRONT FASTENING BRACKET 1	_	_	1					
	Q221342000	REMACHE EXAGONAL M5	HEXAGONAL RIVET M5	6	6	6					
	Q012031000	TORNILLO EXAGONAL M5X10 A.304	HEXAGONAL BOLT M5X10 A.304	3	6	6					
8	H122802000	PANEL LATERAL SUP. DCHO. G700	RIGHT SUP. SIDE PANEL G700	1	1	1					
	Q221342000	REMACHE EXAGONAL M5	HEXAGONAL RIVET M5	5	6	6					
	Q221343000	REMACHE EXAGONAL M6	HEXAGONAL RIVET M6	5	5	5					SISTEMA PUENTE
9	H125403000	ANTERIOR MESA 1/2M G-700	FRONT BENCH 1/2M G-700	1	_	_					
9	H125409000	ANTERIOR MESA 1M G-700	FRONT BENCH 1M G-700	_	1	_					
9	U915402000	ANTERIOR MESA 1,5 M G-700	FRONT BENCH 1,5 M G-700	_	_	1					

MOD.	COCINAS	ZONA	MUEBLE	PLANO	C-2050

ITEM	CODIGO	DENOMINACION	TEXTO	CG7-20	CG7-40	CG7-60					NOTAS
10	H602803000	ZOCALO 7-05 Q	SKIRTING 7-05 Q	1	_	_					
10	H602816000	ZOCALO 7-10 Q	SKIRTING 7-10 Q	_	1	_					
10	U932817000	ZOCALO 7-50	SKIRTING 7-50	_	_	1					
	Q012031000	TORNILLO EXAGONAL M5X10 A.304	HEXAGONAL BOLT M5X10 A.304	2	2	2					
	Q302022000	ARANDELA 16X6X1.2 A.304	WASHER 16X6X1.2 A.304	2	2	2					
	Q162040000	TUERCA EXAGONAL M6	HEXAGONAL NUT M6	2	4	4					
	Q302022000	ARANDELA 16X6X1.2 A.304	WASHER 16X6X1.2 A.304	2	4	4					
11	U902806000	PANEL PORTAMANDOS CG7-20	CONTROL HOLDER PANEL CG7-	1	_	_					
11	U902802000	PANEL PORTAMANDOS CG7-40	CONTROL HOLDER PANEL CG7-	_	1	_					
11	U902809000	PANEL PORTAMANDOS CG7-60	CONTROL HOLDER PANEL CG7-	_	_	1					
	Q151336000	TORNILLO SOPORTE GUIAS	GUIDE SUPPORT BOLT	2	2	3					
	Q152004000	TORNIL. APLASTADO M5X13 A 304	FLAT HEADED SCREW M5x13 A 3	4	4	4					
	Q302022000	ARANDELA 16X6X1.2 A.304	WASHER 16X6X1.2 A.304	2	2	2					
	U912805000	ESCUDO FAGOR G700	FAGOR EMBLEM G700	1	1	1					
	Q221023000	CLIP SUJECIÓN RÁPIDA Ø5	RAPID CONNECT CLIP Ø5	2	2	2					
12	U902807000	BASE CG7-20 SM	BASE CG7-20 SM	1	_	_					
12	U902803000	BASE CG7-40 Q	BASE CG7-40 Q	_	1	_					
12	U932816000	BASE CG7-50	BASE CG7-50	_	_	1					
	Q419005000	REMACHE 4X8 ALMG3 / ALUMINIO	RIVET 4X8 ALMG3 / ALUMINIUM	4	4	4					
13	H122801000	PANEL LATERAL SUP. IZDO. G700	LEFT UPPER SIDE PANEL G700	1	1	1					
	Q221342000	REMACHE EXAGONAL M5	HEXAGONAL RIVET M5	5	5	5					
	Q221343000	REMACHE EXAGONAL M6	HEXAGONAL RIVET M6	5	5	5					SISTEMA PUENTE
14	Z200107000	PATA REGULABLE	ADJUSTABLE LEG	4	4	4					
	Q221345000	REMACHE EXAGONAL M10	HEXAGONAL RIVET M10	4	4	4					

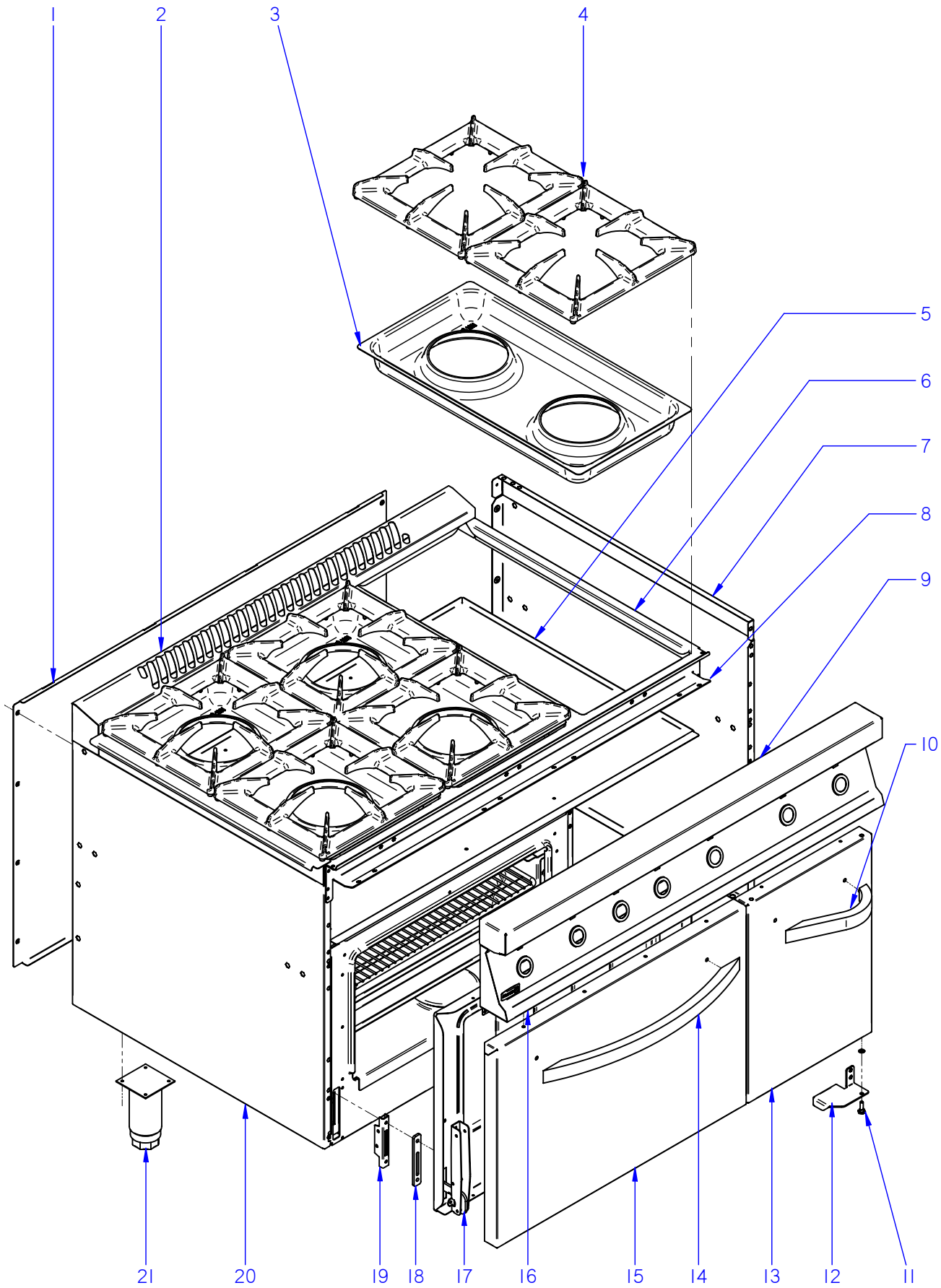

ITEM MARCADO EN COLOR = REPUESTO RECOMENDADO
COLOURED ITEM = RECOMMENDED SPARE PART

N plano	Firma	Fecha	Aparato	MUEBLE	Lamina	
C-2051		2008-05	COCINAS CG7-41 / 61 ; CGE7-41		2	Fagor Industrial S.Coop. FAGOR Oñate

MOD.	COCINAS	ZONA	MUEBLE	PLANO	C-2051

ITEM	CODIGO	DENOMINACION	TEXTO	CG7-41	CG7-61	CGE7-41					NOTAS
1	S562805000	PANEL POSTERIOR G750	REAR PANEL G750	1	_	1					
1	U912809000	PANEL POSTERIOR 1 1/2M G 700	REAR PANEL 1 1/2M G 700	_	1	_					
	Q419005000	REMACHE 4X8 ALMG3 / ALUMINIO	RIVET 4X8 ALMG3 / ALUMINIUM	8	8	8					
2	S565401000	EMBELLECEDOR POSTERIOR 1M	REAR TRIM 1M	1	_	1					
2	U915406000	EMBELLE CHIMENEA 1 1/2 G 700	FLUE PIPE TRIM 1 1/2 G 700	_	1	_					
3	U915407000	BACINETA QUEMADORES G 700	BASIN BURNERS G 700	2	3	2					
4	U915413000	PARRILLA DE MESA (G 700)	TABLE GRILL (G 700)	4	6	4					
5	U912605000	BASE RECOGE GRASAS 1M	GREASE COLLECTION TRAY 1M	1	_	1					
5	U912604000	BASE RECOGE GRASAS 1 1/2M	GREASE COLLECTION BASE 1 1/	_	1	_					
	Q419005000	REMACHE 4X8 ALMG3 / ALUMINIO	RIVET 4X8 ALMG3 / ALUMINIUM	3	3	3					
6	U915411000	MESA COCINA 1 M G 700	KITCHEN TABLE 1 M G 700	1	_	1					
6	U915405000	MESA COCINA 1 1/2M G 700	KITCHEN TABLE 1 1/2M G 700	_	1	_					
	Q152004000	TORNIL. APLASTADO M5X13 A 304	FLAT HEADED SCREW M5x13 A 3	4	4	4					
7	U912802000	PANEL LATERAL DCHO. G700	RIGHT SIDE PANEL G700	1	1	1					
	Q221342000	REMACHE EXAGONAL M5	HEXAGONAL RIVET M5	4	4	4					
	Q221343000	REMACHE EXAGONAL M6	HEXAGONAL RIVET M6	4	4	4					
	Q221343000	REMACHE EXAGONAL M6	HEXAGONAL RIVET M6	7	7	7					SISTEMA PUENTE
	Q012043000	TORNILL. EXAGONAL M6X20 A.304	HEXAGONAL BOLT M6X10 A.304	2	2	2					
	Q302022000	ARANDELA 16X6X1.2 A.304	WASHER 16X6X1.2 A.304	2	2	2					
8	H602603000	ESCUADRA AMARRE ANTER. 1 M	FRONT FASTENING BRACKET 1	1	_	1					
8	U912603000	ESCUADRA AMARRE ANTERI 1 1/2	FRONT FAST. BRACKET 1 1/2	_	1	_					
	Q221342000	REMACHE EXAGONAL M5	HEXAGONAL RIVET M5	6	6	6					
	Q152004000	TORNIL. APLASTADO M5X13 A 304	FLAT HEADED SCREW M5x13 A 3	6	6	6					
9	H125409000	ANTERIOR MESA 1M G-700	FRONT BENCH 1M G-700	1	_	1					
9	U915402000	ANTERIOR MESA 1 1/2M G700	FRONT BENCH 1 1/2M G700	_	1	_					
	Q152004000	TORNIL. APLASTADO M5X13 A 304	FLAT HEADED SCREW M5x13 A 3	2	2	2					
10	U910506000	ASA ARMARIO COMPL G700	FULL CUPBOARD HANDLE G700	_	1	_					
	Q162040000	TUERCA EXAGONAL M6	HEXAGONAL NUT M6	_	2	_					
	Q232040000	ARANDELA A6	WASHER A6	_	2	_					

MOD.	COCINAS	ZONA	MUEBLE	PLANO	C-2051

ITEM	CODIGO	DENOMINACION	TEXTO	CG7-41	CG7-61	CGE7-41					NOTAS
11	X960504000	TORNILLO DE GIRO M8	ROTATION BOLT M8	_	1	_					
	Q232040000	ARANDELA A6	WASHER A6	_	2	_					
	Q232050000	ARANDELA A8	WASHER A8	_	1	_					
12	U020511000	BISAGRA DERECHA INFERIOR	LOWER RIGHT HINGE	_	1	_					
13	U910503000	PUERTA LATERAL G700	SIDE DOOR G700	_	1	_					
	U910504000	CONTRAPUERTA LATERAL G 700	SIDE DOOR REVERSE G 700	_	1	_					
	X960501000	IMAN	MAGNET	_	2	_					
	X960502000	FIJACION IMAN	MAGNET ATTACHMENT	_	2	_					
	Q012021000	TORN.EXA. M4X10	HEX BOLT M4X10	_	2	_					
	Q232050000	ARANDELA A8	WASHER A8	_	2	_					
14	U020504000	ASA DE HORNO COMPL. G 900	COMPL. OVEN HANDLE G 900	1	1	1					
	Q302022000	ARANDELA 16X6X1.2 A.304	WASHER 16X6X1.2 A.304	2	2	2					
	Q012041000	TORNILLO EXAGONAL M6X10 A.304	HEXAGONAL BOLT M6X10 A.304	2	2	2					
	Q162040000	TUERCA EXAGONAL M6	HEXAGONAL NUT M6	2	2	2					
15	U910501000	PUERTA DE HORNO G700	OVEN DOOR G700	1	1	1					
	U910502000	CONTRAPUERTA HORNO G700	OVEN DOOR REVERSE G700	1	1	1					
	Q152004000	TORNIL. APLASTADO M5X13 A 304	FLAT HEADED SCREW M5x13 A 3	3	3	3					
	X160537000	TAPON PUERTAS	DOOR COVER	1	1	1					
16	U912808000	PORTAMANDOS COMPL CG-741	COMPL CONTROL HOLDER CG-7	1	_	1					
16	U912804000	PORTAMANDOS COMPL CG-761	COMPL CONTROL HOLDER CG-7	_	1	_					
16	U952810000	PORTAMANDOS COMPL CGE-741	COMPL CONTROL HOLDER CGE	_	_	1					
	Q152004000	TORNIL. APLASTADO M5X13 A 304	FLAT HEADED SCREW M5x13 A 3	4	4	4					
	U912805000	ESCUDO FAGOR G700	FAGOR EMBLEM G700	1	1	1					
	Q221023000	CLIP SUJECIÓN RÁPIDA Ø5	RAPID CONNECT CLIP Ø5	2	2	2					
17	U020528000	BISAGRA CIERRE HORNO	OVEN LOCK HINGE	2	2	2					
	Q152022000	TORNILLO M.6X8	BOLT M.6X8	6	6	6					
18	U915619000	EMBELLECEDOR GUIA BISAGRA	HINGE GUIDE TRIM	2	2	2					
	Q152045000	TORNILLO AMARRRE M6X25	FASTENING BOLT M6X25	4	4	4					
19	U010512000	GUIA BISAGRA HORNO	OVEN HINGE GUIDE	2	2	2					

MOD.	COCINAS	ZONA	MUEBLE	PLANO	C-2051

ITEM	CODIGO	DENOMINACION	TEXTO	CG7-41	CG7-61	CGE7-41					NOTAS
20	U912801000	PANEL LATERAL IZDO. G700	LEFT SIDE PANEL G700	1	1	1					
	Q221342000	REMACHE EXAGONAL M5	HEXAGONAL RIVET M5	13	13	13					
	Q221343000	REMACHE EXAGONAL M6	HEXAGONAL RIVET M6	2	2	2					
	Q012043000	TORNILL. EXAGONAL M6X20 A.304	HEXAGONAL BOLT M6X10 A.304	2	2	2					
	Q302022000	ARANDELA 16X6X1.2 A.304	WASHER 16X6X1.2 A.304	2	2	2					
	Q221343000	REMACHE EXAGONAL M6	HEXAGONAL RIVET M6	7	7	7					SISTEMA PUENTE
21	X260151000	PATA REGULABLE	ADJUSTABLE LEG	4	4	4					
	Q411304000	REMACHE AVIBULB Ø 4,8	AVIBULB RIVET Ø 4.8	16	16	16					

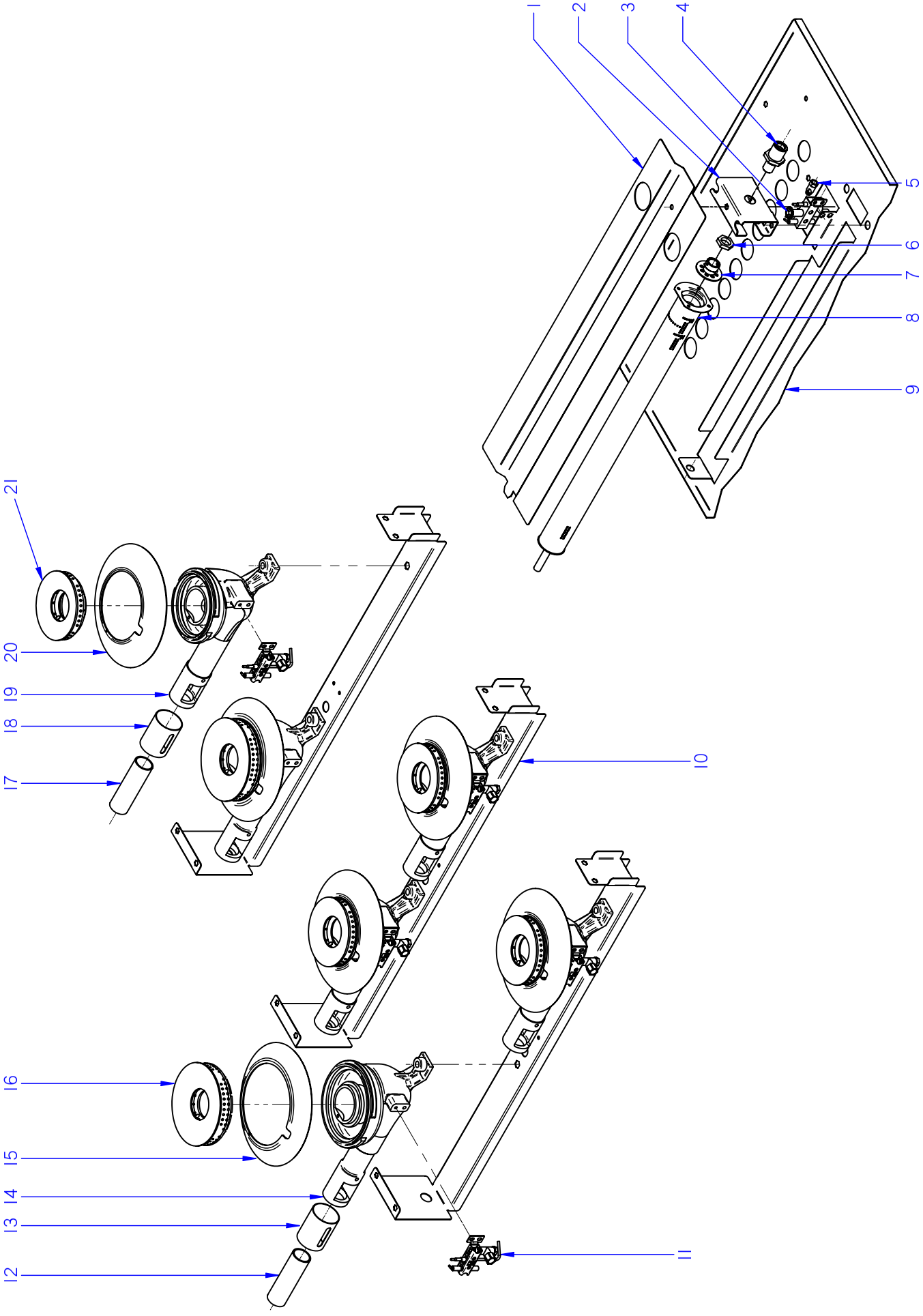

ITEM MARCADO EN COLOR = REPUESTO RECOMENDADO
COLOURED ITEM = RECOMMENDED SPARE PART

N plano	Firma	Fecha	Aparato	QUEMADORES	Lamina	
C-2052		2008-05	COCINAS CG7-20/40/41/61;CGE7-41		3	Fagor Industrial S.Coop. Onate FAGOR

MOD.	COCINAS	ZONA	QUEMADORES	PLANO	C-2052

ITEM	CODIGO	DENOMINACION	TEXTO	CG7-20	CG7-40	CG7-60	CG7-41	CG7-61	CGE7-41		
1	U915613000	DEFLECTOR QUEMADOR HORNO	OVEN BURNER DEFLECTOR	_	_	_	1	1	_		
	Q152004000	TORNIL. APLASTADO M5X13 A 304	FLAT HEADED SCREW M5x13 A 3	_	_	_	1	1	_		
	Q302022000	ARANDELA 16X6X1.2 A.304	WASHER 16X6X1.2 A.304	_	_	_	1	1	_		
	Q221342000	REMACHE EXAGONAL M5	HEXAGONAL RIVET M5	_	_	_	1	1	_		
2	U105635000	AMARRE QUEMADOR HORNO(HG)	OVEN BURNER FASTENING (HG)	_	_	_	1	1	_		
	Q222041000	REMACHE EXAGONAL M4 (INOX)	HEXAGONAL RIVET M4 (INOX)	_	_	_	4	4	_		
	Q012031000	TORNILLO EXAGONAL M5X10 A304	HEXAGONAL BOLT M5x10 A304	_	_	_	2	2	_		
3	U322118000	PILOTO COMPLETO 100.062	COMPLETE PILOT LIGHT 100.062	_	_	_	1	1	_		
	U442137000	INYECTOR Ø 0.4 GN	INJECTOR Ø 0.4 GN.	_	_	_	1	1	_		
	Q012031000	TORNILLO EXAGONAL M5X10 A304	HEXAGONAL BOLT M5x10 A304	_	_	_	2	2	_		
4	X505724000	MANGUITO PORTATOBERAS	NOZZLE HOLDER SLEEVE	_	_	_	1	1	_		
5	U134323000	RACORD BICONO 6 958.031	BICONE CONNECTION 6 958.031	_	_	_	1	1	_		
6	Q223019000	TUERCA 3/8 GAS LATÓN	NUT 3/8 GAS BRASS	_	_	_	1	1	_		
7	X505013000	REGULADOR DE AIRE POLIDORO	POLIDORO AIR CONTROL	_	_	_	1	1	_		
	Q031322000	TORNILLO ALOMADO M4X15	CURVED SCREW M4X15	_	_	_	1	1	_		
8	U105701000	QUEMADOR HORNO COMPLETO	COMPLETE OVEN BURNER	_	_	_	1	1	_		
	Q042022000	TORNILLO AVELLANADO M4X15	COUNTERSUNK BOLT M4x15	_	_	_	4	4	_		
	R612400000	TOBERA DE Ø 1.35 B.P.	NOZZLE Ø 1.35 B.P.	_	_	_	1	1	_		
	9207500000	TOBERA DE Ø 2.05 G.N.	NOZZLE Ø 2.05 G.N.	_	_	_	1	1	_		
9	U915606000	BASE INTERIOR HORNO G700	OVEN INTERIOR BASE G700	_	_	_	1	1	_		
	Q152004000	TORNIL. APLASTADO M5X13 A304	FLAT HEADED BOLT M5x13 A304	_	_	_	4	4	_		
	Q221342000	REMACHE EXAGONAL M5	HEXAGONAL RIVET M5	_	_	_	2	2	_		
10	U915408000	LISTON SOPORTE QUEMA G 700	BURNER SUPPORT STRUT G 700	1	2	3	2	3	2		
11	11U9121210	PILOTO COMPLETO	COMPLETE PILOT LIGHT	2	4	6	4	6	4		
S/Nº	X012126000	CUERPO SIN RACORD 901.210	BODY WITHOUT CONNECTION 9	2	4	6	4	6	4		SOLO EN VERSION BP
S/Nº	U442137000	INYECTOR Ø 0.4 GN	INJECTOR Ø 0.4 GN.	2	4	6	4	6	4		
S/Nº	U912107000	CABEZA PILOTO 1 LLAMA (G 700)	PILOT HEAD 1 FLAME (G 700)	2	4	6	4	6	4		
S/Nº	U442130000	AMARRE TRASERO PI 978.009	REAR FASTEN. PI 978.009	2	4	6	4	6	4		
S/Nº	X012116000	TORNILLO AMARRE 953.007	FASTENING BOLT 953.007	2	4	6	4	6	4		
S/Nº	X012122000	REGULADOR AIRE 912.001	AIR CONTROL 912.001	2	4	6	4	6	4		
S/Nº	U442131000	AMARRE DELANTERO PI 978.021	FRONT FASTENING PI 978.021	2	4	6	4	6	4		

MOD.	COCINAS	ZONA	QUEMADORES	PLANO	C-2052

ITEM	CODIGO	DENOMINACION	TEXTO	CG7-20	CG7-40	CG7-60	CG7-41	CG7-61	CGE7-41		
S/Nº	U442136000	CUERPO SIN RACORD (INY. Ø 0.4)	BODY WITHOUT CONNECTION 9	2	4	6	4	6	4		SOLO EN VERSION GN
S/Nº	U442133000	RACORD BICONO 4 958.030	BICONE CONNECTION 4,958.030	2	4	6	4	6	4		ELIMINADO 11.06.08
12	U565700000	VENTURI QUEMADOR 8000	VENTURI BURNER 8000	_	1	2	1	2	1		
	R422400000	TOBERA DE Ø 1.25 B.P.	NOZZLE Ø 1.25 B.P.	_	1	2	1	2	1		
	U912401000	TOBERA DE Ø 1.95 G.N.	NOZZLE Ø 1.95 G.N.	_	1	2	1	2	1		
13	U265702000	REGULADOR AIRE	AIR CONTROLLER	_	1	2	1	2	1		
14	U915702000	CUERPO QUEMADOR 7000 Kcal/h	BURNER BODY 7000 Kcal/h	_	1	2	1	2	1		
	Q132054000	VARILLA ROSCADA M6 x 12	THREADED ROD M6 x 12	_	1	2	1	2	1		
	Q162040000	TUERCA EXAGONAL M6	HEXAGONAL NUT M6	_	1	2	1	2	1		
15	U915703000	PROTEC. PILOTO QUEMAD. 7000	BURNER PILOT GUARD 7000	_	1	2	1	2	1		
	Q012045000	TORNILLO EXAGONAL M6X30 A.304	HEXAGONAL BOLT M6X30 A.304	_	1	2	1	2	1		
	Q302022000	ARANDELA 16X6X1.2 A.304	WASHER 16X6X1.2 A.304	_	1	2	1	2	1		
16	U135702500	QUEMADOR 8000 MESA	BURNER 8000 BENCH	_	1	2	1	2	1		
	Q371026000	MANGUITO SUJEC. 4X14 DIN1481	HOSE FASTENING 4X14 ØIN1481	_	1	2	1	2	1		
	Q131511000	VARILLA ROSCADA M3x8 DIN 913	THREADED ROD M3x8 DIN 913	_	1	2	1	2	1		
17	U125720000	VENTURI QUEMADOR 4000 kcl	VENTURI BURNER 4000 kcl	2	3	4	3	4	3		
	X312400000	TOBERA DE Ø 1.10 B.P.	NOZZLE Ø 1.10 B.P.	2	3	4	3	4	3		ELIMINADO 24.09.09
	U122407000	TOBERA DE Ø 1.05 B.P.	NOZZLE Ø 1.05 B.P.	2	3	4	3	4	3		INTRODUCIDO 24.09.09
	R302400000	TOBERA DE Ø 1.65 G.N.	NOZZLE Ø 1.65 G.N.	2	3	4	3	4	3		
18	U265702000	REGULADOR AIRE	AIR CONTROLLER	2	3	4	3	4	3		
19	U915701000	CUERPO QUEMADOR 5000 Kcal/h	BURNER BODY 5000 Kcal/h	2	3	4	3	4	3		
	Q131542000	VARILLA ROSCADA M6 x 15	THREADED ROD M6 x 15	2	3	4	3	4	3		
	Q162040000	TUERCA EXAGONAL M6	HEXAGONAL NUT M6	2	3	4	3	4	3		
20	U915704000	PROTEC. PILOTO QUEMAD. 5000	BURNER PILOT GUARD 5000	2	3	4	3	4	3		
	Q012045000	TORNILLO EXAGONAL M6X30 A304	HEXAGONAL BOLT M6x30 A304	2	3	4	3	4	3		
	Q302022000	ARANDELA 16X6X1.2 A.304	WASHER 16X6X1.2 A.304	2	3	4	3	4	3		
21	U445731500	QUEMADOR 4000 (00545-010)	BURNER 4000 (00545-010)	2	3	4	3	4	3		ELIMINADO 25.09.09
21	U445731000	QUEMADOR 4000 (00545-010)	BURNER 4000 (00545-010)	2	3	4	3	4	3		INTRODUCIDO. 25.09.09
	Q371026000	MANGUITO SUJEC. 4X14 DIN1481	HOSE FASTENING 4X14 ØIN1481	2	3	4	3	4	3		
	Q131511000	VARILLA ROSCADA M3x8 DIN 913	THREADED ROD M3x8 DIN 913	2	3	4	3	4	3		

MOD.	COCINAS	ZONA	QUEMADORES	PLANO	C-2052

ITEM	CODIGO	DENOMINACION	TEXTO	CG7-20 H	CG7-40 H	CG7-60H	CG7-41H	CG7-61H	CGE7-41 H		
1	U915613000	DEFLECTOR QUEMADOR HORNO	OVEN BURNER DEFLECTOR	_	_	_	1	1	_		
	Q152004000	TORNIL. APLASTADO M5X13 A 304	FLAT HEADED SCREW M5x13 A 3	_	_	_	1	1	_		
	Q302022000	ARANDELA 16X6X1.2 A.304	WASHER 16X6X1.2 A.304	_	_	_	1	1	_		
	Q221342000	REMACHE EXAGONAL M5	HEXAGONAL RIVET M5	_	_	_	1	1	_		
2	U105635000	AMARRE QUEMADOR HORNO(HG)	OVEN BURNER FASTENING (HG)	_	_	_	1	1	_		
	Q222041000	REMACHE EXAGONAL M4 (INOX)	HEXAGONAL RIVET M4 (INOX)	_	_	_	4	4	_		
	Q012031000	TORNILLO EXAGONAL M5X10 A304	HEXAGONAL BOLT M5x10 A304	_	_	_	2	2	_		
3	U322118000	PILOTO COMPLETO 100.062	COMPLETE PILOT LIGHT 100.062	_	_	_	1	1	_		
	U442137000	INYECTOR Ø 0.4 GN	INJECTOR Ø 0.4 GN.	_	_	_	1	1	_		
	Q012031000	TORNILLO EXAGONAL M5X10 A304	HEXAGONAL BOLT M5x10 A304	_	_	_	2	2	_		
4	X505724000	MANGUITO PORTATOBERAS	NOZZLE HOLDER SLEEVE	_	_	_	1	1	_		
5	U134323000	RACORD BICONO 6 958.031	BICONE CONNECTION 6 958.031	_	_	_	1	1	_		
6	Q223019000	TUERCA 3/8 GAS LATÓN	NUT 3/8 GAS BRASS	_	_	_	1	1	_		
7	X505013000	REGULADOR DE AIRE POLIDORO	POLIDORO AIR CONTROL	_	_	_	1	1	_		
	Q031322000	TORNILLO ALOMADO M4X15	CURVED SCREW M4X15	_	_	_	1	1	_		
8	U105701000	QUEMADOR HORNO COMPLETO	COMPLETE OVEN BURNER	_	_	_	1	1	_		
	Q042022000	TORNILLO AVELLANADO M4X15	COUNTERSUNK BOLT M4x15	_	_	_	4	4	_		
	R612400000	TOBERA DE Ø 1.35 B.P.	NOZZLE Ø 1.35 B.P.	_	_	_	1	1	_		
	9207500000	TOBERA DE Ø 2.05 G.N.	NOZZLE Ø 2.05 G.N.	_	_	_	1	1	_		
9	U915606000	BASE INTERIOR HORNO G700	OVEN INTERIOR BASE G700	_	_	_	1	1	_		
	Q152004000	TORNIL. APLASTADO M5X13 A304	FLAT HEADED BOLT M5x13 A304	_	_	_	4	4	_		
	Q221342000	REMACHE EXAGONAL M5	HEXAGONAL RIVET M5	_	_	_	2	2	_		
10	U915408000	LISTON SOPORTE QUEMA G 700	BURNER SUPPORT STRUT G 700	1	2	3	2	3	2		
11	11U9121210	PILOTO COMPLETO	COMPLETE PILOT LIGHT	2	4	6	4	6	4		
S/Nº	X012126000	CUERPO SIN RACORD 901.210	BODY WITHOUT CONNECTION 9	2	4	6	4	6	4		SOLO EN VERSION BP
S/Nº	U442137000	INYECTOR Ø 0.4 GN	INJECTOR Ø 0.4 GN.	2	4	6	4	6	4		
S/Nº	U912107000	CABEZA PILOTO 1 LLAMA (G 700)	PILOT HEAD 1 FLAME (G 700)	2	4	6	4	6	4		
S/Nº	U442130000	AMARRE TRASERO PI 978.009	REAR FASTEN. PI 978.009	2	4	6	4	6	4		
S/Nº	X012116000	TORNILLO AMARRE 953.007	FASTENING BOLT 953.007	2	4	6	4	6	4		
S/Nº	X012122000	REGULADOR AIRE 912.001	AIR CONTROL 912.001	2	4	6	4	6	4		
S/Nº	U442131000	AMARRE DELANTERO PI 978.021	FRONT FASTENING PI 978.021	2	4	6	4	6	4		

MOD.	COCINAS	ZONA	QUEMADORES	PLANO	C-2052

ITEM	CODIGO	DENOMINACION	TEXTO	CG7-20 H	CG7-40 H	CG7-61H	CG7-41H	CG7-61H	CGE7-41 H		
S/Nº	U442136000	CUERPO SIN RACORD (INY. Ø 0.4)	BODY WITHOUT CONNECTION 9(	2	4	6	4	6	4		SOLO EN VERSION GN
S/Nº	U442133000	RACORD BICONO 4 958.030	BICONE CONNECTION 4,958.030	2	4	6	4	6	4		ELIMINADO 11.06.08
12	U565700000	VENTURI QUEMADOR 8000	VENTURI BURNER 8000	2	4	6	4	6	4		
	R422400000	TOBERA DE Ø 1.25 B.P.	NOZZLE Ø 1.25 B.P.	2	4	6	4	6	4		
	U912401000	TOBERA DE Ø 1.95 G.N.	NOZZLE Ø 1.95 G.N.	2	4	6	4	6	4		
13	U265702000	REGULADOR AIRE	AIR CONTROLLER	2	4	6	4	6	4		
14	U915702000	CUERPO QUEMADOR 7000 Kcal/h	BURNER BODY 7000 Kcal/h	2	4	6	4	6	4		
	Q132054000	VARILLA ROSCADA M6 x 12	THREADED ROD M6 x 12	2	4	6	4	6	4		
	Q162040000	TUERCA EXAGONAL M6	HEXAGONAL NUT M6	2	4	6	4	6	4		
15	U915703000	PROTEC. PILOTO QUEMAD. 7000	BURNER PILOT GUARD 7000	2	4	6	4	6	4		
	Q012045000	TORNILLO EXAGONAL M6X30 A.304	HEXAGONAL BOLT M6X30 A.304	2	4	6	4	6	4		
	Q302022000	ARANDELA 16X6X1.2 A.304	WASHER 16X6X1.2 A.304	2	4	6	4	6	4		
16	U135702500	QUEMADOR 8000 MESA	BURNER 8000 BENCH	2	4	6	4	6	4		
	Q371026000	MANGUITO SUJEC. 4X14 DIN1481	HOSE FASTENING 4X14 ØIN1481	2	4	6	4	6	4		
	Q131511000	VARILLA ROSCADA M3x8 DIN 913	THREADED ROD M3x8 DIN 913	2	4	6	4	6	4		
17	U125720000	VENTURI QUEMADOR 4000 kcl	VENTURI BURNER 4000 kcl	_	_	_	_	_	_		
	X312400000	TOBERA DE Ø 1.10 B.P.	NOZZLE Ø 1.10 B.P.	_	_	_	_	_	_		
	U122407000	TOBERA DE Ø 1.05 B.P.	NOZZLE Ø 1.05 B.P.	_	_	_	_	_	_		
	R302400000	TOBERA DE Ø 1.65 G.N.	NOZZLE Ø 1.65 G.N.	_	_	_	_	_	_		
18	U265702000	REGULADOR AIRE	AIR CONTROLLER	_	_	_	_	_	_		
19	U915701000	CUERPO QUEMADOR 5000 Kcal/h	BURNER BODY 5000 Kcal/h	_	_	_	_	_	_		
	Q131542000	VARILLA ROSCADA M6 x 15	THREADED ROD M6 x 15	_	_	_	_	_	_		
	Q162040000	TUERCA EXAGONAL M6	HEXAGONAL NUT M6	_	_	_	_	_	_		
20	U915704000	PROTEC. PILOTO QUEMAD. 5000	BURNER PILOT GUARD 5000	_	_	_	_	_	_		
	Q012045000	TORNILLO EXAGONAL M6X30 A304	HEXAGONAL BOLT M6x30 A304	_	_	_	_	_	_		
	Q302022000	ARANDELA 16X6X1.2 A.304	WASHER 16X6X1.2 A.304	_	_	_	_	_	_		
21	U445731500	QUEMADOR 4000 (00545-010)	BURNER 4000 (00545-010)	_	_	_	_	_	_		
21	U445731000	QUEMADOR 4000 (00545-010)	BURNER 4000 (00545-010)	_	_	_	_	_	_		
	Q371026000	MANGUITO SUJEC. 4X14 DIN1481	HOSE FASTENING 4X14 ØIN1481	_	_	_	_	_	_		
	Q131511000	VARILLA ROSCADA M3x8 DIN 913	THREADED ROD M3x8 DIN 913	_	_	_	_	_	_		

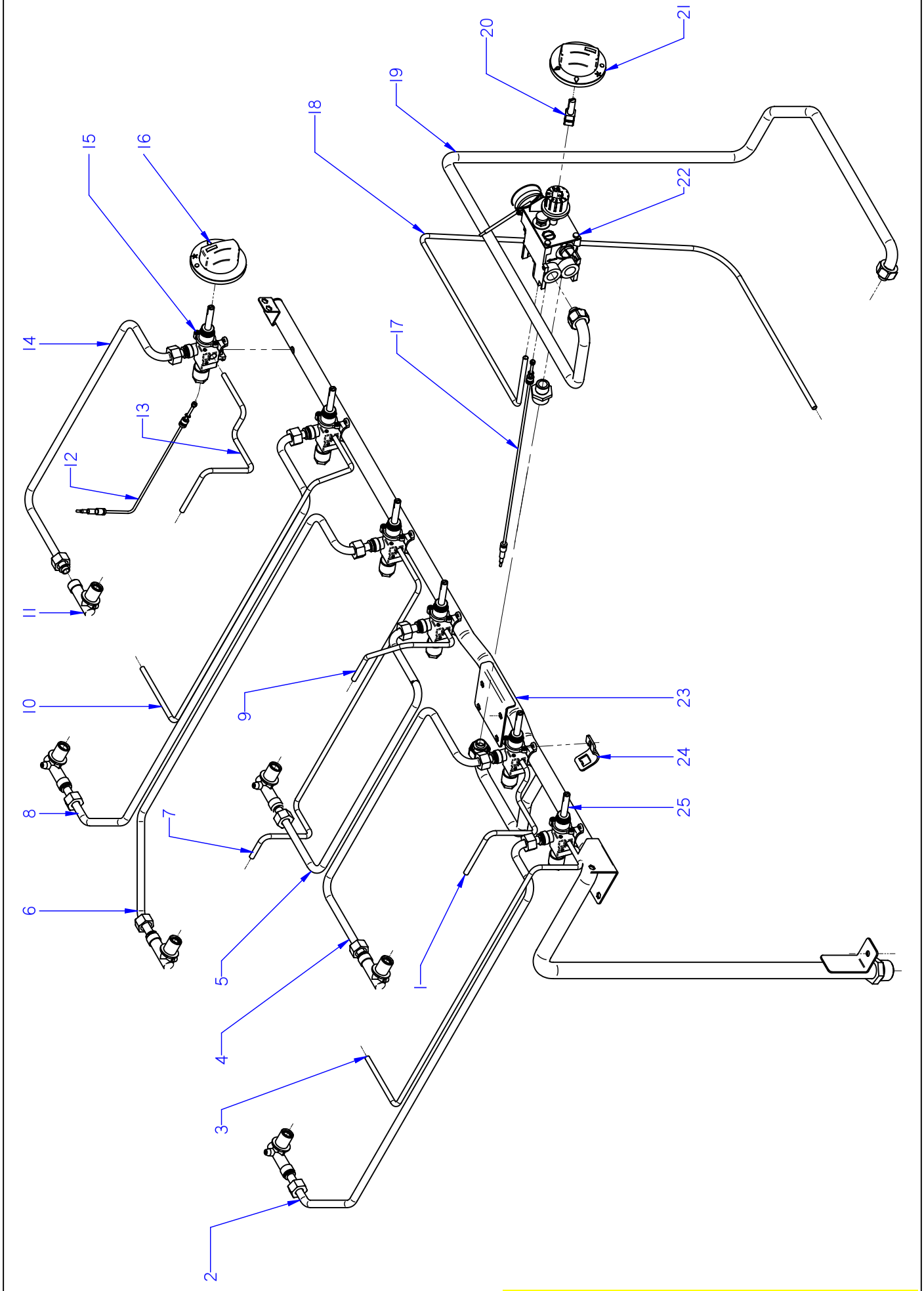

ITEM MARCADO EN COLOR = REPUESTO RECOMENDADO
COLOURED ITEM = RECOMMENDED SPARE PART

N plano	Firma	Fecha	Aparato		Lamina	
C-2053		2008-05	CONDUCCIONES Y GRIFOS	COCINAS CG7- / CGE7-41	4	Fagor Industrial S.Coop. Oñate FAGOR

MOD.	COCINAS	ZONA	CONDUCCIONES Y GRIFOS	PLANO	C-2053

ITEM	CODIGO	DENOMINACION	TEXTO	CG7-20	CG7-40	CG7-60	CG7-20 H	CG7-40 H	CG7-60 H		NOTAS
1	U915022000	TUBO PILOTO ANTERIOR IZQDO.	LEFT FRONT PILOT PIPE	_	1	1	_	1	1		
	U134323000	RACORD BICONO 6 958.031	BICONE CONNECTION 6 958.031	_	2	2	_	2	2		
2	U905010000	TUBO POSTERIOR G700	REAR PIPE G700	1	_	_	1	_	_		
2	U915010000	TUBO POSTERIOR IZQUIER. G700	LEFT REAR PIPE G700	_	1	1	_	1	1		
3	U905007000	TUBO PILOTO POSTERIOR	REAR PILOT PIPE	1	_	_	1	_	_		
3	U915021000	TUBO PILOTO POSTERIOR IZDO.	LEFT REAR PILOT PIPE	_	1	1	_	1	1		
	U134323000	RACORD BICONO 6 958.031	BICONE CONNECTION 6 958.031	2	2	2	2	2	2		
4	U915016000	TUBO ANTERIOR IZQUIERDO G700	LEFT FRONT PIPE G700	_	1	1	_	1	1		
5	U915025000	TUBO ANTERIOR CENTRAL G700	CENTRAL FRONT PIPE G700	_	1	1	_	1	1		
	Q306062000	ARANDELA Ø13,9X10,33x1,5	WASHER Ø13.9X10.33x1.5	_	8	8	_	8	8		
6	U905012000	TUBO ANTERIOR G700	FRONT PIPE G700	1	_	_	1	_	_		
6	U915027000	TUBO POSTERIOR CENTRAL G700	CENTRAL REAR PIPE G700	_	1	1	_	1	1		
7	U905008000	TUBO PILOTO ANTERIOR	FRONT PILOT PIPE	1	_	_	1	_	_		
7	U915029000	TUBO PILOTO POSTER. CENTRAL	REAR PILOT PIPE CENTRAL	_	1	1	_	1	1		
	U134323000	RACORD BICONO 6 958.031	BICONE CONNECTION 6 958.031	2	2	2	2	2	2		
8	U915017000	TUBO POSTERIOR DCHO G700	RIGHT REAR PIPE G700	_	_	1	_	_	1		
	Q306062000	ARANDELA Ø13,9X10,33x1,5	WASHER Ø13.9X10.33x1.5	_	_	2	_	_	2		
9	U915009000	TUBO PILOTO ANTER. CENTRAL	FRONT PILOT PIPE CENTRAL	_	1	1	_	1	1		
	U134323000	RACORD BICONO 6 958.031	BICONE CONNECTION 6 958.031	_	2	2	_	2	2		
10	U915023000	TUBO PILOTO POSTERIOR DCHO.	RIGHT REAR PILOT PIPE	_	_	1	_	_	1		
	U134323000	RACORD BICONO 6 958.031	BICONE CONNECTION 6 958.031	_	_	2	_	_	2		
11	U915014000	PORTATOBERAS HORNO	OVEN NOZZLE HOLDER	2	4	6	2	4	6		
	U565011000	TUERCA GUIA	GUIDE NUT	2	4	6	2	4	6		INTRODUCIDA 10.06.08
	Q153002000	TORNILLO TAPON	CAP BOLT	2	4	6	2	4	6		
12	U222130000	TERMOPAR L=600	THERMOCOUPLE L=600	2	4	6	2	4	6		
13	U915024000	TUBO PILOTO ANTERIOR DCHO	RIGHT FRONT PILOT PIPE	_	_	1	_	_	1		
	U134323000	RACORD BICONO 6 958.031	BICONE CONNECTION 6 958.031	_	_	2	_	_	2		
14	U915019000	TUBO ANTERIOR DERECHO G700	RIGHT FRONT PIPE G700	_	_	1	_	_	1		
	Q306062000	ARANDELA Ø13,9X10,33x1,5	WASHER Ø13.9X10.33x1.5	_	_	2	_	_	2		
15	U912101000	GRIFO VALVULA CPMM18700/821	VALVE TAP CPMM18700/821	2	3	4	_	_	_		
16	H122101000	BOTON DE MANDO Ø8 G700	CONTROL BUTTON Ø8 G700	2	4	6	2	4	6		

MOD.	COCINAS	ZONA	CONDUCCIONES Y GRIFOS	PLANO	C-2053

ITEM	CODIGO	DENOMINACION	TEXTO	CG7-20	CG7-40	CG7-60	CG7-20 H	CG7-40 H	CG7-60 H		NOTAS
17	U742131000	TERMOPAR L=1500 M9	THERMOCOUPLE L=1500 M9	_	_	_	_	_	_		
18	U915008000	TUBO PILOTO HORNO G 700	OVEN PILOT PIPE G 700	_	_	_	_	_	_		
	U134323000	RACORD BICONO 6 958.031	BICONE CONNECTION 6 958.031	_	_	_	_	_	_		
19	U915005000	TUBO EUROSIT A HORNO COMPL	EUROSIT PIPE TO COMPL OVEN	_	_	_	_	_	_		
	Q306062000	ARANDELA Ø13,9X10,33x1,5	WASHER Ø13.9X10.33x1.5	_	_	_	_	_	_		
20	R062101000	EJE BOTON DE MANDO EUROSIT	CONTROL BUTTON SHAFT EURO	_	_	_	_	_	_		
	Q131560000	VARILLA ROSCADA M4x8 DIN913	THREADED ROD M4x8 DIN913	_	_	_	_	_	_		
21	U912105000	BOTON DE MANDO Ø 8 EUROSIT	CONTROL BUTTON Ø 8 EUROSIT	_	_	_	_	_	_		
22	T982100000	VALVULA 630 EUR 630.343	VALVE 630 EUR 630.343	_	_	_	_	_	_		
	T982102000	TAPON 3/8 972.061	CAP 3/8 972.061	_	_	_	_	_	_		
	U875017000	MANGUITO R 3/8"-R1/2"	HOSE R 3/8"-R1/2"	_	_	_	_	_	_		
	Q306058000	ARANDELA Ø23,5X17,60X1,5	WASHER Ø23.5X17.60X1.5	_	_	_	_	_	_		
23	U905013000	CONDUCCION GENERAL CG7-20	GENERAL PIPING CG7-20	1	_	_	1	_	_		
23	U905002000	CONDUCCION GENERAL CG7-40	GENERAL PIPING CG7-40	_	1	_	_	1	_		
23	U905016000	CONDUCCION GENERAL CG7-60	GENERAL PIPING CG7-60	_	_	1	_	_	1		
	U635008000	TUERCA CIEGA 3/4	BLIND NUT 3/4	1	1	1	1	1	1		
	Q152004000	TORNIL. APLASTADO M5X13 A 304	FLAT HEADED SCREW M5x13 A 3	4	4	4	4	4	4		
	Q306051000	ARANDELA TAPON Ø 23.5x3	CAP WASHER Ø 23.5x3	1	1	1	1	1	1		
24	U912104000	BRIDA AMARRE GRIFO 1/2"	TAP FASTENING FLANGE 1/2"	2	4	6	2	4	6		
	Q122032000	TORNILLO ALLEN M.5x15	ALLEN HEAD SCREW M.5x15	2	4	6	2	4	6		
25	U912109000	GRIFO 18700 BY-PASS 1,15	TAP 18700 BY-PASS 1.15	_	1	2	2	4	6		

MOD.	COCINAS	ZONA	CONDUCCIONES Y GRIFOS	PLANO	C-2053

ITEM	CODIGO	DENOMINACION	TEXTO	CG7-41	CG7-61	CGE7-41	CG7-41 H	CG7-61 H	CGE7-41 H		NOTAS
1	U915022000	TUBO PILOTO ANTERIOR IZD G700	LEFT FRONT PILOT PIPE G700	1	1	1	1	1	1		
	U134323000	RACORD BICONO 6 958.031	BICONE CONNECTION 6 958.031	2	2	2	2	2	2		
2	U915010000	TUBO POSTERIOR IZQUIER. G700	LEFT REAR PIPE G700	1	1	1	1	1	1		
	Q306062000	ARANDELA Ø13,9X10,33x1,5	WASHER Ø13.9X10.33x1.5	2	2	2	2	2	2		
3	U915021000	TUBO PILOTO POSTERIOR IZDO.	LEFT REAR PILOT PIPE	1	1	1	1	1	1		
	U134323000	RACORD BICONO 6 958.031	BICONE CONNECTION 6 958.031	2	2	2	2	2	2		
4	U915016000	TUBO ANTERIOR IZQUIERDO G700	LEFT FRONT PIPE G700	1	1	1	1	1	1		
	Q306062000	ARANDELA Ø13,9X10,33x1,5	WASHER Ø13.9X10.33x1.5	2	2	2	2	2	2		
5	U915025000	TUBO ANTERIOR CENTRAL G700	CENTRAL FRONT PIPE G700	1	1	1	1	1	1		
	Q306062000	ARANDELA Ø13,9X10,33x1,5	WASHER Ø13.9X10.33x1.5	2	2	2	2	2	2		
6	U915027000	TUBO POSTERIOR CENTRAL G700	CENTRAL REAR PIPE G700	1	1	1	1	1	1		
	Q306062000	ARANDELA Ø13,9X10,33x1,5	WASHER Ø13.9X10.33x1.5	2	2	2	2	2	2		
7	U915029000	TUBO PILOTO POSTER. CENTRAL	REAR PILOT PIPE CENTRAL	1	1	1	1	1	1		
	U134323000	RACORD BICONO 6 958.031	BICONE CONNECTION 6 958.031	2	2	2	2	2	2		
8	U915017000	TUBO POSTERIOR DCHO G700	RIGHT REAR PIPE G700	_	1	_	_	1	_		
	Q306062000	ARANDELA Ø13,9X10,33x1,5	WASHER Ø13.9X10.33x1.5	_	2	_	_	2	_		
9	U915009000	TUBO PILOTO ANTERIOR CENTR.	CENTRAL FRONT PILOT PIPE	1	1	1	1	1	1		
	U134323000	RACORD BICONO 6 958.031	BICONE CONNECTION 6 958.031	2	2	2	2	2	2		
10	U915023000	TUBO PILOTO POSTERIOR DCHO.	RIGHT REAR PILOT PIPE	_	1	_	_	1	_		
	U134323000	RACORD BICONO 6 958.031	BICONE CONNECTION 6 958.031	_	2	_	_	2	_		
11	U915014000	PORTATOBERAS HORNO	OVEN NOZZLE HOLDER	4	6	4	4	6	4		
	U565011000	TUERCA GUIA	GUIDE NUT	4	6	4	4	6	4		INTRODUCIDA 10.06.08
	Q153002000	TORNILLO TAPON	CAP BOLT	4	6	4	4	6	4		
12	U222130000	TERMOPAR L=600	THERMOCOUPLE L=600	4	6	4	4	6	4		
13	U915024000	TUBO PILOTO ANTERIOR DCHO	RIGHT FRONT PILOT PIPE	_	1	_	_	1	_		
	U134323000	RACORD BICONO 6 958.031	BICONE CONNECTION 6 958.031	_	2	_	_	2	_		
14	U915019000	TUBO ANTERIOR DERECHO G700	RIGHT FRONT PIPE G700	_	1	_	_	1	_		
	Q306062000	ARANDELA Ø13,9X10,33x1,5	WASHER Ø13.9X10.33x1.5	_	2	_	_	2	_		
15	U912101000	GRIFO VALVULA CPMM18700/821	VALVE TAP CPMM18700/821	3	4	3	_	_	_		
16	H122101000	BOTON DE MANDO Ø8 G700	CONTROL BUTTON Ø8 G700	4	6	4	4	6	4		
17	U742131000	TERMOPAR L=1500 M9	THERMOCOUPLE L=1500 M9	1	1	_	1	1	_		

MOD.	COCINAS	ZONA	CONDUCCIONES Y GRIFOS	PLANO	C-2053

ITEM	CODIGO	DENOMINACION	TEXTO	CG7-41	CG7-61	CGE7-41	CG7-41H	CG7-61H	CGE7-41 H		NOTAS
18	U915008000	TUBO PILOTO HORNO G 700	OVEN PILOT PIPE G 700	1	1	_	1	1	_		
	U134323000	RACORD BICONO 6 958.031	BICONE CONNECTION 6 958.031	2	2	_	2	2	_		
19	U915005000	TUBO EUROSIT A HORNO COMPL	EUROSIT PIPE TO COMPL OVEN	1	1	_	1	1	_		
	Q306062000	ARANDELA Ø13,9X10,33x1,5	WASHER Ø13.9X10.33x1.5	2	2	_	2	2	_		
20	R062101000	EJE BOTON DE MANDO EUROSIT	CONTROL BUTTON SHAFT EURO	1	1	_	1	1	_		
	Q131560000	VARILLA ROSCADA M4x8 DIN913	THREADED ROD M4x8 DIN913	1	1	_	1	1	_		
21	U912105000	BOTON DE MANDO Ø 8 EUROSIT	CONTROL BUTTON Ø 8 EUROSIT	1	1	_	1	1	_		
22	T982100000	VALVULA 630 EUR 630.343	VALVE 630 EUR 630.343	1	1	_	1	1	_		
	T982102000	TAPON 3/8 972.061	CAP 3/8 972.061	2	2	_	2	2	_		
	U875017000	MANGUITO R 3/8"-R1/2"	HOSE R 3/8"-R1/2"	2	2	_	2	2	_		
	Q306058000	ARANDELA Ø23,5X17,60X1,5	WASHER Ø23.5X17.60X1.5	2	2	_	2	2	_		
23	U915040000	DISTRIBUCION COMPL. 1 M G700	COMPL. DISTRIBUTION 1 M G700	1	_	_	1	_	_		
23	U915002000	DISTRIBUCION COMP 1 1/2 M G700	COMP DISTRIBUTION 1 1/2 M G70	_	1	_	_	1	_		
23	U955001000	DISTRIBUCION COMPLETO GE7-41	COMPLETE DISTRIBUTION GE7-4	_	_	1	_	_	1		
	Q221321000	REMACHE ROSCAD. NUTSERT M6	THREADED RIVET NUTSERT M6	2	2	2	2	2	2		
	Q221342000	REMACHE EXAGONAL M5	HEXAGONAL RIVET M5	2	2	2	2	2	2		
	Q152004000	TORNIL. APLASTADO M5X13 A 304	FLAT HEADED SCREW M5x13 A 3	2	2	2	2	2	2		
	Q012043000	TORNILLO EXAGONAL M6X20 A304	HEXAGONAL BOLT M6x20 A304	1	1	1	1	1	1		
	Q302022000	ARANDELA Ø16X6X1.2 A.304	WASHER 16X6X1.2 A.304	1	1	1	1	1	1		
24	U912104000	BRIDA AMARRE GRIFO 1/2"	TAP FASTENING FLANGE 1/2"	4	6	4	4	6	4		
	Q122032000	TORNILLO ALLEN M.5x15	ALLEN HEAD SCREW M.5x15	4	6	4	4	6	4		
25	U912109000	GRIFO 18700 BY-PASS 1,15	TAP 18700 BY-PASS 1.15	1	2	1	4	6	4		

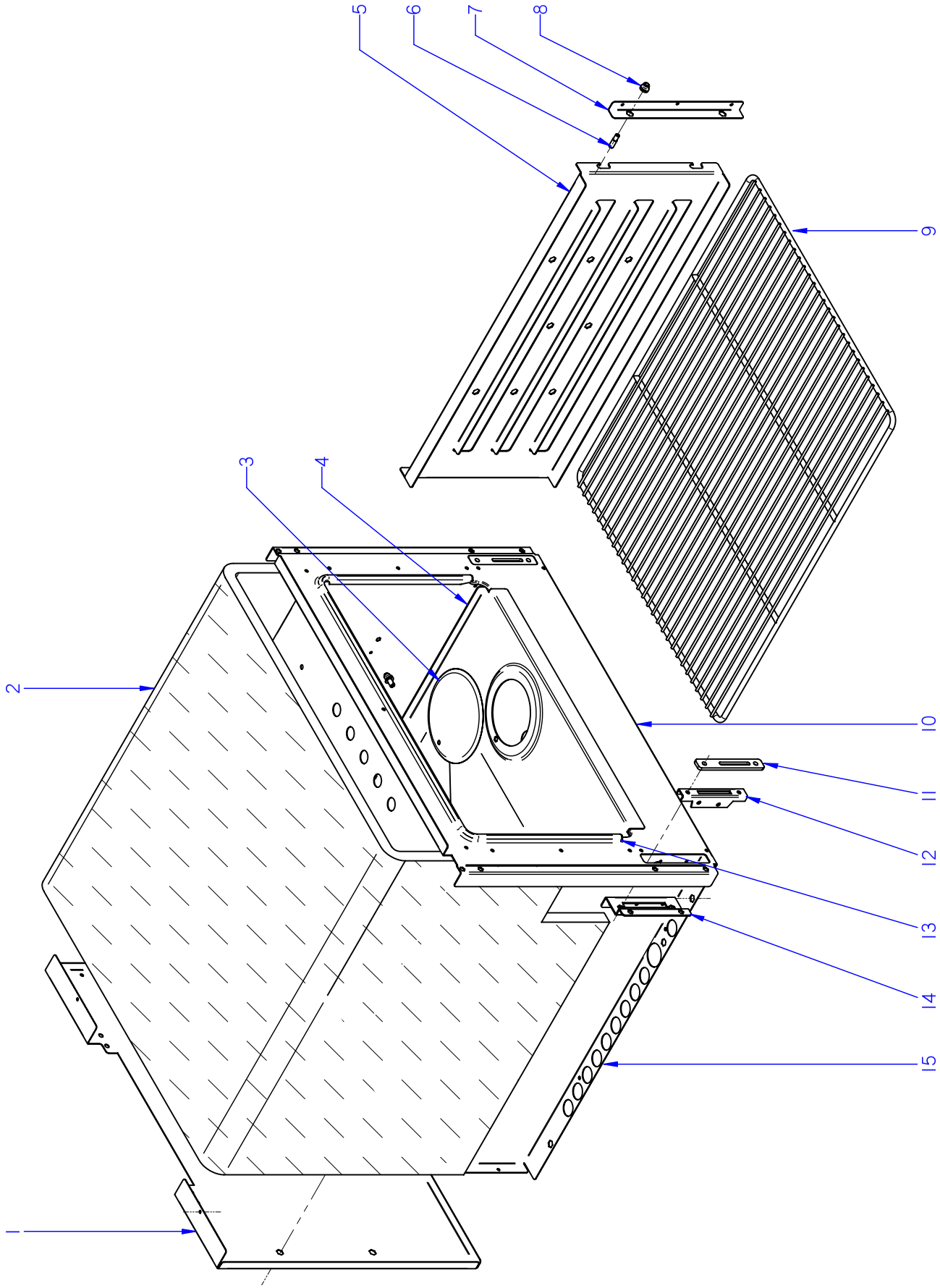

ITEM MARCADO EN COLOR = REPUESTO RECOMENDADO
COLOURED ITEM = RECOMMENDED SPARE PART

N plano	Firma	Fecha	Aparato		Lamina	
C-2054		2008-05	HORNO	COCINAS CG7-41; CG7-61	6	Fagor Industrial S.Coop. Oñate FAGOR

MOD.	COCINAS	ZONA	HORNO	PLANO	C-2054

ITEM	CODIGO	DENOMINACION	TEXTO	CG7-41	CG7-61						NOTAS
1	U915603000	POSTERIOR DE HORNO G700	OVEN REAR G700	1	1						
	Q412000000	REMACHE TUBULAR 4 x 8	TUBULAR RIVET 4 x 8	12	12						
2	U325621000	AISLANTE 1455x670x20-AL1C	INSULATION 1455x670x20-AL1C	1	1						
3	U915618000	TAPILLA DE SOLERA G 700	BASE COVER G 700	1	1						
	Q101534000	TORNILLO EXAGON. M5x25 DIN931	HEXAGONAL BOLT. M5x25 DIN93	1	1						
4	U915617000	SOLERA DE HORNO G 700	OVEN BASE G 700	1	1						
	Q221342000	REMACHE EXAGONAL M5	HEXAGONAL RIVET M5	1	1						
5	U915607000	GUIA LATERAL HORNO G700	OVEN SIDE GUIDE G700	2	2						
6	Q151336000	TORNILLO SOPORTE GUIAS	GUIDE SUPPORT BOLT	4	4						
	Q302022000	ARANDELA 16X6X1.2 A.304	WASHER 16X6X1.2 A.304	4	4						
7	U915616000	SUPLEM. AMARRE GUIA LATERAL	SUPP. FASTENING SIDE GUIDE	2	2						
8	Q221343000	REMACHE EXAGONAL M6	HEXAGONAL RIVET M6	4	4						
9	U135642000	PARRILLA DE HORNO	OVEN TRAY	1	1						
10	U915601000	MARCO DE HORNO G700	OVEN FRAME G700	1	1						
	Q221304000	REMACHE ROSCA NUTSERT M5	THREADED RIVET NUTSERT M5	2	2						
11	U915619000	EMBELLECEDOR GUIA BISAGRA	HINGE GUIDE TRIM	2	2						
	Q152045000	TORNILLO AMARRRE M6X25	FASTENING BOLT M6X25	4	4						
12	U010512000	GUIA BISAGRA HORNO	OVEN HINGE GUIDE	2	2						
13	U025623000	JUNTA PUERTA HORNO INOX.	OVEN DOOR SEAL INOX.	1	1						
14	U915604000	AMARRE GUIA BISAGRA HORNO	OVEN HINGE GUIDE FASTENING	2	2						
	Q412000000	REMACHE TUBULAR 4 x 8	TUBULAR RIVET 4 x 8	6	6						
	Q222042000	REMACHE EXAGONAL ROSCA M6	HEXAGONAL RIVET THREAD M6	4	4						
15	U915602000	CUERPO DE HORNO G700	OVEN BODY G700	1	1						
	Q221321000	REMACHE ROSCAD.NUTSERT.M6	THREADED RIVET .NUTSERT.M6	1	1						
	Q412000000	REMACHE TUBULAR 4 x 8	TUBULAR RIVET 4 x 8	8	8						

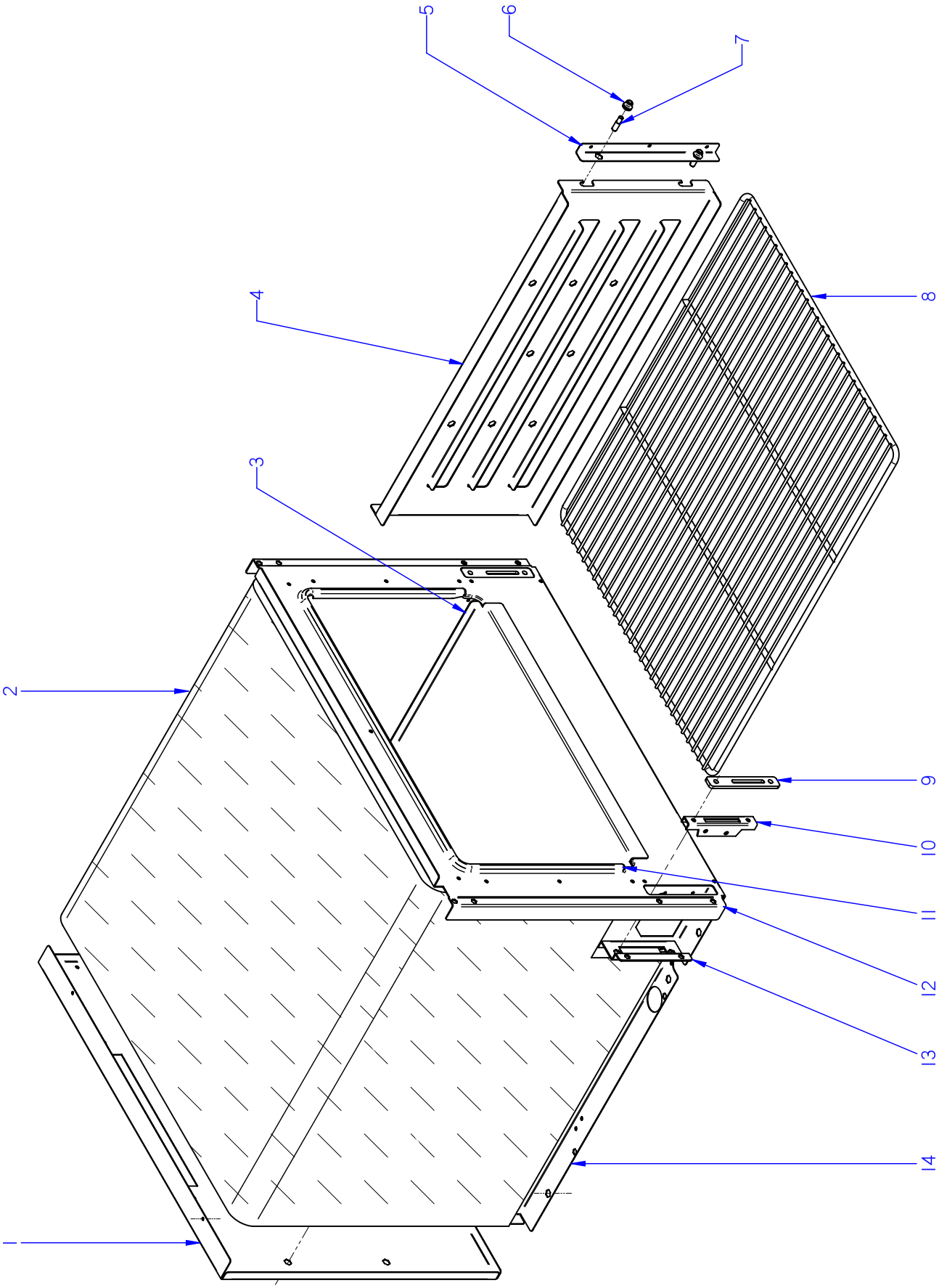

ITEM MARCADO EN COLOR = REPUESTO RECOMENDADO
COLOURED ITEM = RECOMMENDED SPARE PART

N plano	Firma	Fecha	Aparato		Lamina	
C-2055		2008-05	HORNO	COCINA CGE7-41	7	Fagor Industrial S.Coop. Oñate FAGOR

MOD.	COCINAS	ZONA	HORNO	PLANO	C-2055

ITEM	CODIGO	DENOMINACION	TEXTO	CGE7-41							NOTAS
1	U955602000	POSTERIOR HORNO ELECTRICO	ELECTRIC OVEN REAR	1							
2	U325621000	AISLANTE 1455x670x20-AL1C	INSULATION 1455x670x20-AL1C	1							
3	U955613000	SOLERA HORNO ELECTRICO G700	ELECTRIC OVEN FLOOR G700	1							
4	U915607000	GUIA LATERAL HORNO G700	OVEN SIDE GUIDE G700	2							
5	U915616000	SUPLEM. AMARRE GUIA LATERAL	SUPP. FASTENING SIDE GUIDE	2							
6	Q221343000	REMACHE EXAGONAL M6	HEXAGONAL RIVET M6	4							
7	Q151336000	TORNILLO SOPORTE GUIAS	GUIDE SUPPORT BOLT	4							
8	U135642000	PARRILLA DE HORNO	OVEN TRAY	1							
9	U915619000	EMBELLECEDOR GUIA BISAGRA	HINGE GUIDE TRIM	2							
	Q152045000	TORNILLO AMARRRE M6X25	FASTENING BOLT M6X25	4							
10	U010512000	GUIA BISAGRA HORNO	OVEN HINGE GUIDE	2							
11	U025623000	JUNTA PUERTA HORNO INOX.	OVEN DOOR SEAL INOX.	1							
12	U915601000	MARCO DE HORNO G700	OVEN FRAME G700	1							
	Q221304000	REMACHE ROSCA NUTSERT M5	THREADED RIVET NUTSERT M5	4							
	Q412000000	REMACHE TUBULAR 4 x 8	TUBULAR RIVET 4 x 8	8							
13	U915604000	AMARRE GUIA BISAGRA HORNO	OVEN HINGE GUIDE FASTENING	2							
	Q412000000	REMACHE TUBULAR 4 x 8	TUBULAR RIVET 4 x 8	6							
	Q222042000	REMACHE EXAGONAL ROSCA M6	HEXAGONAL RIVET THREAD M6	4							
14	U955601000	CUERPO HORNO ELECTR. G700	ELECTR. OVEN BODY G700	1							

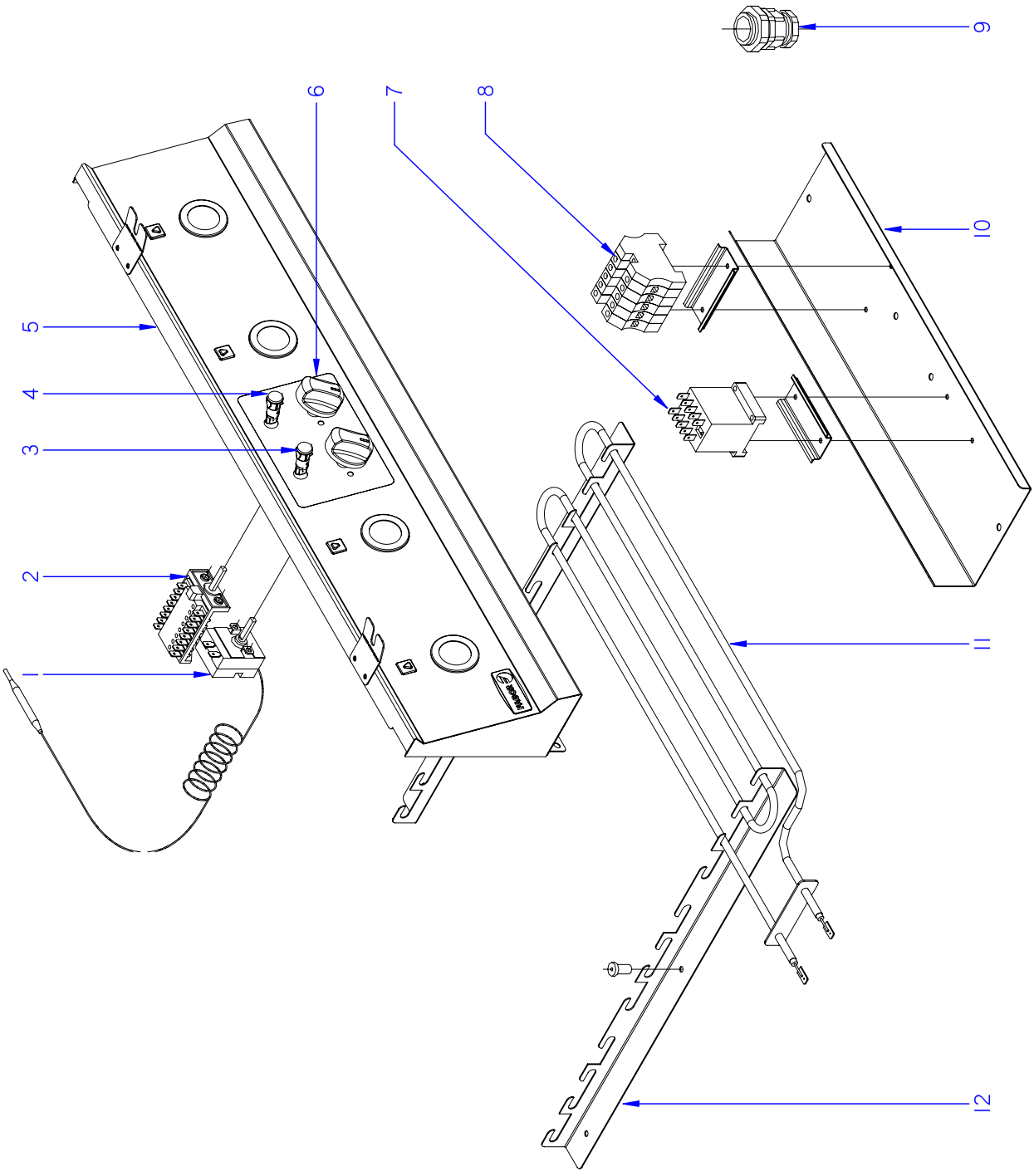

ITEM MARCADO EN COLOR = REPUESTO RECOMENDADO
COLOURED ITEM = RECOMMENDED SPARE PART

N plano	Firma	Fecha	Aparato		Lamina	
C-2056		2008-05	PARTE FUNCIONAL ELECTRICA	COCINA CGE7-41	8	Fagor Industrial S.Coop. Oñate FAGOR

MOD.	COCINAS	ZONA	PARTE FUNCIONAL ELECTRICA	PLANO	C-2056

ITEM	CODIGO	DENOMINACION	TEXTO	CGE7-41							NOTAS
1	X153000000	TERMOSTATO 50-310 C	THERMOSTAT 50-310 C	1							
	Q151320000	TOR. ALOMADO M4X6 H.ZINCADO	CURVED SCREW M4X6 H. ZINC	2							
2	U673006000	CONMUTADOR	SWITCH	1							
	Q151320000	TOR. ALOMADO M4X6 H.ZINCADO	CURVED SCREW M4X6 H. ZINC	2							
3	R693056000	PILOTO AMBAR 41227000A4	AMBER PILOT 41227000A4	1							
4	R693055000	PILOTO VERDE 41227000C7	GREEN PILOT 41227000C7	1							
5	U952810000	PORTAMANDOS COMPL CGE-741	COMPL CONTROL HOLDER CGE-	1							
6	U952103000	BOTON DE MANDO	CONTROL BUTTON	2							
7	Z213007000	CONTACTOR 230 V. 50-60 HZ	CONTACTOR 230 V. 50-60 HZ	1							
	Z123018000	GUIA CONTACTOR L-55 "	CONTACTOR GUIDE L-55 "	1							
8	P453025000	BORNES 10 WDU-10203.O	TERMINALS 10 WDU-10203.O	3							
	P453026000	BORNE TIER 10 WPE-10103.O	TERMINAL TIER 10 WPE-10103.O	1							
	U803009000	BORNA AZUL PASO 16MM	BLUE TAP TERMINAL 16MM	1							
	Z263303000	TOPE FINAL	END STOP	1							
	Z683068000	SEÑALIZ.DEK-6WEIDMULLER	SIGNS DEK-6WEIDMULLER	1							
	Z103083000	GUIA CONTACTOR L-73 "	CONTACTOR GUIDE L-73 "	1							
9	R023013000	PRENSA ESTOPAS PG-21	STUFFING BOX PG-21	1							
10	U953001000	CHAPA AMAR CONTACT. HORNO	CONTACT. FASTEN. PLATE OVEN	1							
	Q152004000	TORNIL. APLASTADO M5X13 A 304	FLAT HEADED SCREW M5x13 A 3	3							
11	U803004000	RESISTENCIA 1000W-230V	RESISTOR 1000W -230V	6							
12	U805613000	ESCUADRA SOPO. RESISTENCIAS	SUPP. BRACKET RESISTORS	4							
	Q419005000	REMACHE 4X8 ALMG3 / ALUMINIO	RIVET 4X8 ALMG3 / ALUMINIUM	12							

MOD.	COCINAS	ZONA	VARIOS	PLANO	

ITEM	CODIGO	DENOMINACION	TEXTO	CG7-20	CG7-40	CG7-41	CG7-61	CGE7-41			NOTAS
	U746511000	FOLLETO INSTRUCCIONES CG700	INSTRUCTION LEAFLET CG700	1	1	1	1	1			ELIMINADO 17.12.08
	U916501000	FOLLETO INSTRUCCIONES CG700	INSTRUCTION LEAFLET CG700	1	1	1	1	1			INTRODUCIDO 17.12.08

MOD.	COCINAS	ZONA	VARIOS	PLANO	

ITEM	CODIGO	DENOMINACION	TEXTO	CGE7-41							NOTAS
	U673054000	ESQUEMA TEORICO ADHESIVO	THEOR. DIAGRAM LABEL	1							HC-76539
	U803007000	CABLEADO HORNO CE-741	OVEN WIRING CE-741	1							
	U673009000	CABLEADO BORNAS A CONMUT.	TERMINAL WIRING TO SWITCH	1							

HE9-10,CGE9-41,CGE7-41,CGE6-41

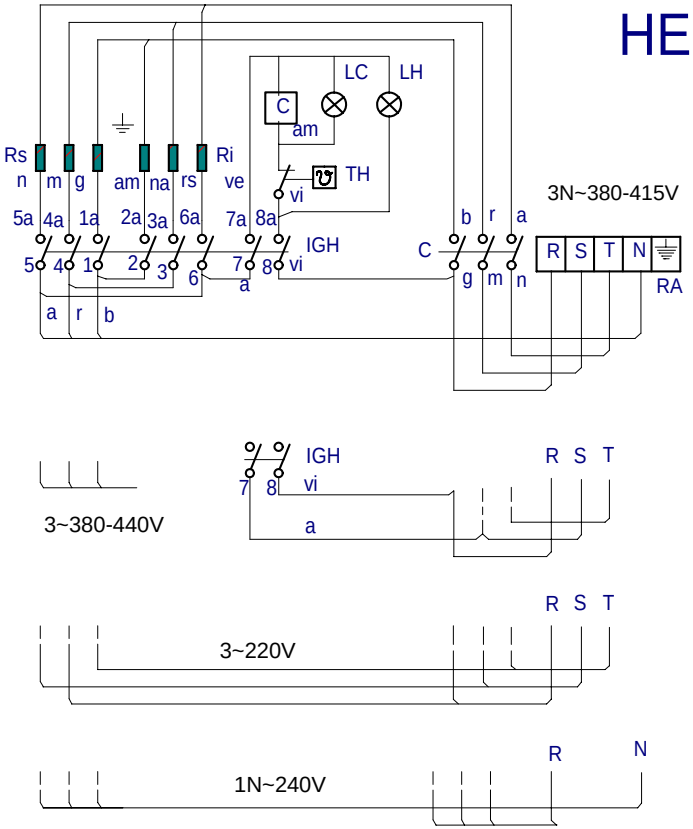

RA:Regleta de Alimentacion

IGH :Conmutador General Horno

C: Contactor

LC : Lampara Calentamiento Horno

LH: Lampara Horno Encendido

TH : Termostato de Horno

Rs : Resistencia Horno Superior

Ri : Resistencia Horno Inferior

r = rojo-red-rouge
m = marron-brown-marron
g = gris-grey-gris
n = negro-black-noir
a = azul-blue-bleu
b = blanco-white-blanc
vi = violeta-violette-violet
am = amarillo-yellow-jaune
na = naranja-orange-orange
rs = rosa-rose-pink
ve = verde-green-vert
am/ve = amarillo/verde-yellow/green-jaune/vert

	1 1a	2 2a	3 3a	4 4a	5 5a	6 6a	7 7a	8 8a
0								
1	X			X	X		X	X
2	X	X	X	X	X	X	X	X
3		X	X			X	X	X

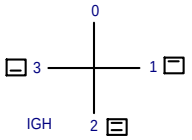

U673054

	Esquema teorico adhesivo			U-673054000		
Nº	Pieza	Cant.	Material	Nº Clasificacion	Acabado	
Nº	Modificacion		Propuesta de	Fecha	Tolerancias generales	
					<5±	50–100± :
					5–25± :	>100±
					25–50± :	○±

	Firma	Fecha
Dibujado	M.maillo	01-11-2002
Proyectado		
Comprobado		

FAGOR

Fagor Industrial,Koop.Elk, Mugatua

Mecanizado superficial

Escala 1/1

COCINAS HE9-10

Plano numero HC-76539

Sustituye al Nº

Sustituido por

Plano hau ez daiteke erabil ez berrizta gure baimenitz gabe