SAGI - BASE REFRIGERATA "TRENDY" TN lt.433, 2 PORTINE+3 CASSETTI
KTIB11 - 15-06-2008 »

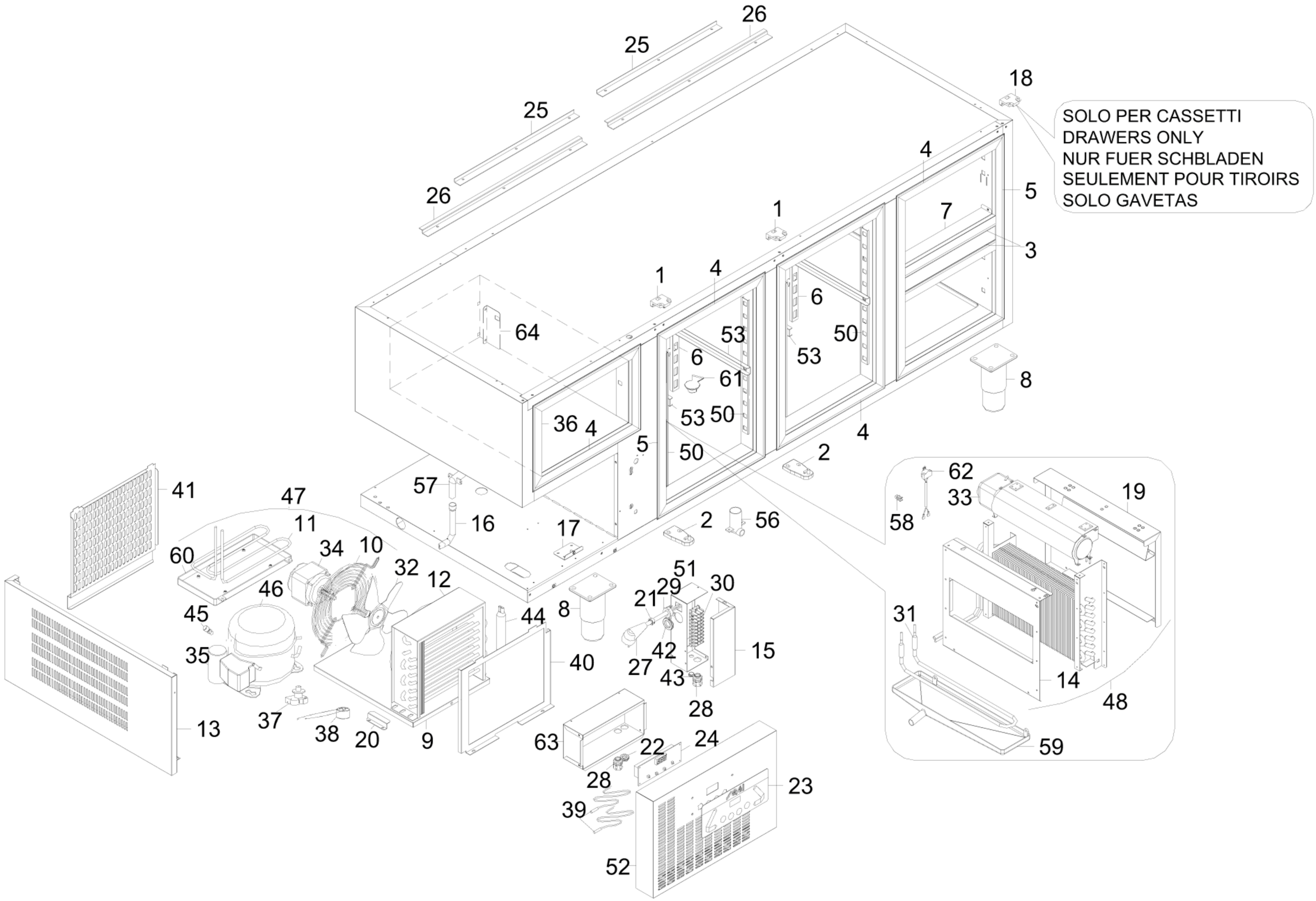

SAGI - BASE REFRIGERATA "TRENDY" TN lt.433, 2 PORTINE+3 CASSETTI
KTIB11 - A000490 - GRUPPO PORTE-CASSETTI - 15-06-2008 »

Modello Typ Model Modele Modelo

		KTIA KTIAA KTIAM	KTIA2 KTIA2A KTIA2M	KTIA11 KTIA11A KTIA11M	KTIA13 KTIA13A KTIA13M	KTIB KTIBA KTIBM	KTIB2 KTIB2A KTIB2M	KTIB4 KTIB4A KTIB4M	KTIB11 KTIB11A KTIB11M	KTIB13 KTIB13A KTIB13M	KTIC KTICA KTICM	KTIC2 KTIC2A KTIC2M	KTIC4 KTIC4A KTIC4M	KTIC11 KTIC11A KTIC11M	KTIC22 KTIC22A KTIC22M	KTIC13 KTIC13A KTIC13M
Num.cassetti	1/2	1	1	1	1	1	1	1	1	1	1	1	1	1	1	1
Schublad	1/2SUP	-	1	-	-	-	1	2	-	-	-	1	2	-	-	-
Drawers	1/2INF	-	1	-	-	-	1	2	-	-	-	1	2	-	-	-
Tiroirs	1/3	-	-	1	3	-	-	-	1	3	-	-	-	1	2	3
Gabetas	2/3	-	-	1	-	-	-	-	1	-	-	-	-	1	2	-
Porte Türen Doors Portes Puertas		2	1	1	1	3	2	1	2	2	4	3	2	3	2	3

