DESPIECE TECNICO

# Hornos Mixtos
# Fours Mixtes
# Combi Ovens
# HeiBluftdämpfer
# Forno Misti

**Modelos:**

**HEI-6/11**
**HEM-6/11**
**HEP-6/11**

**HEI-10/11**
**HEM-10/11**
**HEP-10/11**

***Febrero 2008 February***

FAGOR

**Fagor Industrial**

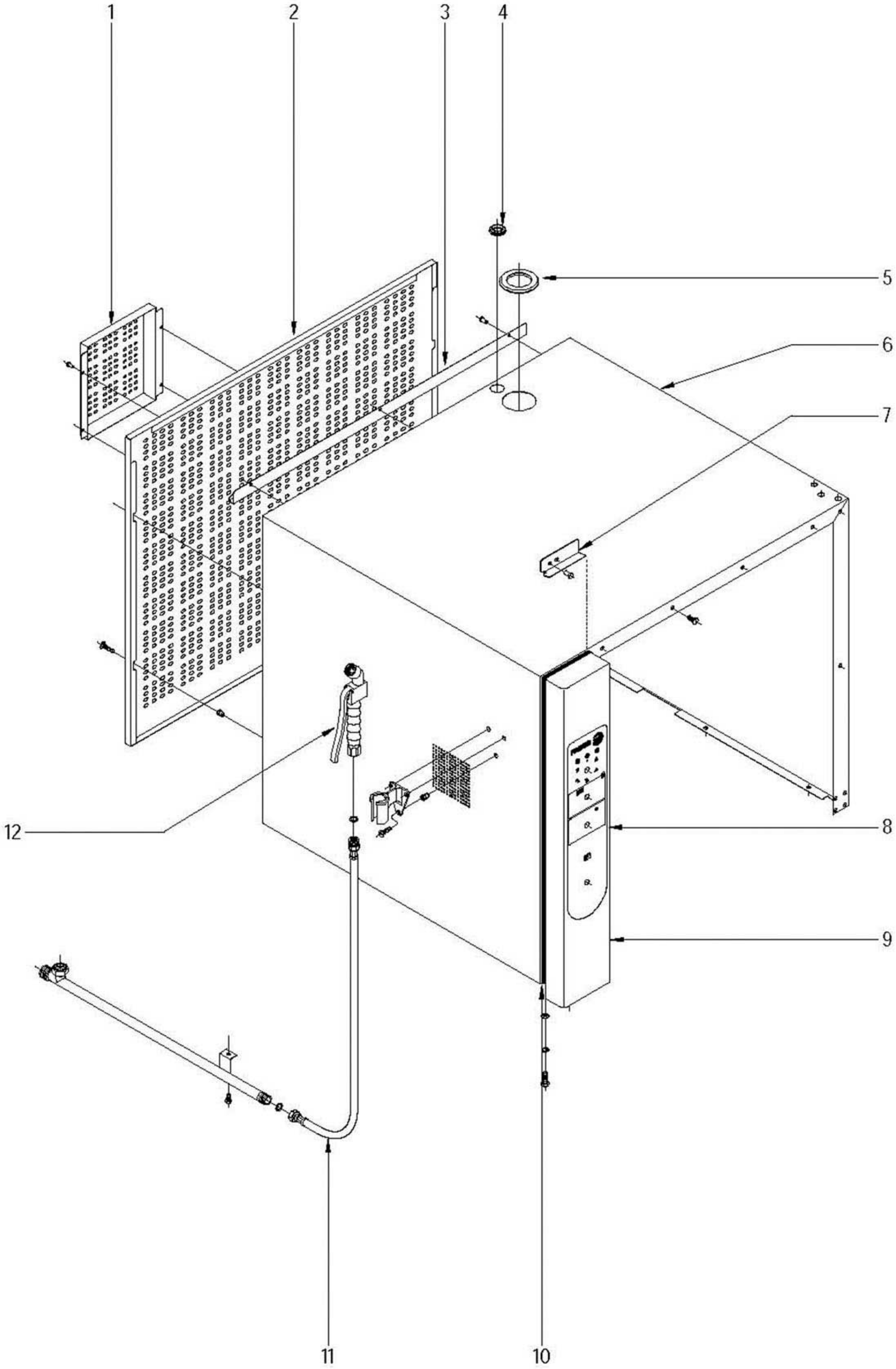


| N plano | Firma | Fecha | Aparato | Lamina | |
|---|---|---|---|---|---|
| C-1959 | | 2008-02 | MUEBLE<br>HORNOS HEI; HEM; HEP 6/11-10/11 | 1 | Fagor Industrial S.Coop. FAGOR<br>Onate |

| MOD. | HORNOS | ZONA | MUEBLE | PLANO | C-1959 |
|---|---|---|---|---|---|

| ITEM | CODIGO | DENOMINACION | TEXTO | HEI 6/11 | HEM 6/11 | HEP 6/11 | HEI 10/11 | HEM 10/11 | HEP 10/11 | | NOTAS |
|---|---|---|---|---|---|---|---|---|---|---|---|
| 1 | R092822000 | TAPA VENTILACION MOTOR | FAN MOTOR COVER | 1 | 1 | 1 | 1 | 1 | 1 | | |
| | Q221342000 | REMACHE EXAGONAL M5 | HEXAGONAL RIVET M5 | 4 | 4 | 4 | 4 | 4 | 4 | | |
| 2 | R662816000 | PANEL POSTERIOR EXT HM-6-11 | REAR PANEL EXT HM-6-11 | 1 | 1 | 1 | _ | _ | _ | | |
| 2 | R672812000 | PANEL POSTERIOR EXT HM-10-11 | REAR PANEL EXT HM-10-11 | _ | _ | _ | 1 | 1 | 1 | | |
| | Q221342000 | REMACHE EXAGONAL M5 | HEXAGONAL RIVET M5 | 4 | 4 | 4 | 4 | 4 | 4 | | |
| | Q152038000 | TORNILLO AMARRE M5X30 | FASTENING BOLT M5X30 | 4 | 4 | 4 | 4 | 4 | 4 | | |
| 3 | R672811000 | CANALETA RECOGEAGUAS | WATER COLLECTOR PIPE | 1 | 1 | 1 | 1 | 1 | 1 | | |
| | Q412002000 | REMACHE AVINOX Ø4x10MM | RIVET AVINOX Ø4x10MM | 3 | 3 | 3 | 3 | 3 | 3 | | |
| 4 | N503017000 | SOPORTE TERMOSTATO 1001713 | THERMOSTAT SUPPORT 100171 | 1 | 1 | 1 | 1 | 1 | 1 | | |
| 5 | R662813000 | PASAMUROS CHIMENEA 101003361 | FEEDTHROUGH FLUE PIPE 1010 | 1 | 1 | 1 | 1 | 1 | 1 | | |
| 6 | R662819000 | CUERPO EXTERIOR DE HORNO | OVEN EXTERIOR BODY | 1 | 1 | 1 | _ | _ | _ | | |
| 6 | R672816000 | CUERPO EXTERIOR 10/11 ELÉCT. | EXTERIOR BODY 10/11 ELECT. | _ | _ | _ | 1 | 1 | 1 | | |
| | Q152017000 | TORNILLO AMARRE M6X13 A304 | FASTENING BOLT M6X13 A304 | 8 | 8 | 8 | 8 | 8 | 8 | | |
| 7 | R662811000 | FIJACION PORTAMANDOS | CONTROL HOLDER ATTACHMEN | 1 | 1 | 1 | 1 | 1 | 1 | | |
| | Q412002000 | REMACHE AVINOX Ø4x10MM | RIVET AVINOX Ø4x10MM | 2 | 2 | 2 | 2 | 2 | 2 | | |
| 8 | R693093000 | SERIGRAFIA HEI-6/11 | SERIGRAPHY HEI-6 / 11 | 1 | _ | _ | _ | _ | _ | | |
| 8 | R663097000 | SERIGRAFIA HEM-6/11 | SERIGRAPHY HEM-6/11 | _ | 1 | _ | _ | _ | _ | | |
| 8 | R663098000 | SERIGRAFIA HEP-6/11 | SERIGRAPHY HEP-6/11 | _ | _ | 1 | _ | _ | _ | | |
| 8 | R703042000 | SERIGRAFIA HEI-10/11 | SERIGRAPHY HEI-10 / 11 | _ | _ | _ | 1 | _ | _ | | |
| 8 | R673067000 | SERIGRAFIA HEM-10/11 20/11 | SERIGRAPHY HEM-10/11 20/11 | _ | _ | _ | _ | 1 | _ | | |
| 8 | R673068000 | SERIGRAFIA HEP-10/11 20/11 | SERIGRAPHY HEP-10/11 20/11 | _ | _ | _ | _ | _ | 1 | | |
| 9 | R692815000 | PORTAMANDOS COMPL. HEI-6/11 | CONTROL HOLDER HEI-6/11 | 1 | _ | _ | _ | _ | _ | | |
| 9 | R662831000 | PORTAMANDOS COMPL. HEM-6/11 | CONTROL HOLDER HEM-6/11 | _ | 1 | 1 | _ | _ | _ | | |
| 9 | R702806000 | PORTAMANDOS COMP. HEI-10/11 | CONTROL HOLDER HEI-10/11 | _ | _ | _ | 1 | _ | _ | | |
| 9 | R672831000 | PORTAMANDOS COMP. HEM-10/11 | CONTROL HOLDER HEM-10/11 | _ | _ | _ | _ | 1 | 1 | | |
| | Q262040000 | ARANDELA GROW. A6 A.304 | WASHER GROW. A6 A.304 | 2 | 2 | 2 | 2 | 2 | 2 | | |
| | Q232040000 | ARANDELA A6 | WASHER A6 | 2 | 2 | 2 | 2 | 2 | 2 | | |
| | Q012042000 | TORNILLO EXAGONAL M6x15 | HEXAGONAL BOLT M6x15 | 2 | 2 | 2 | 2 | 2 | 2 | | |
| 10 | 3715400000 | JUNTA PANEL PORTAMANDOS | SEAL CONTROL HOLDER PANEL | 3 | 3 | 3 | 3 | 3 | 3 | | |
| | | | | | | | | | | | |
| | | | | | | | | | | | |

| MOD. | HORNOS | ZONA | MUEBLE | PLANO | C-1959 |
|---|---|---|---|---|---|

| ITEM | CODIGO | DENOMINACION | TEXTO | HEI 6/11 | HEM 6/11 | HEP 6/11 | HEI 10/11 | HEM 10/11 | HEP 10/11 | | NOTAS |
|---|---|---|---|---|---|---|---|---|---|---|---|
| 11 | R675002000 | SUPLEMENTO DUCHA | SHOWER SUPPLEMENT | _ | 1 | 1 | _ | 1 | 1 | | |
| | Q306039000 | ARANDELA JUNTA 23,8X16,2X1,5 | WASHER SEAL 23.8X16.2X1.5 | _ | 1 | 1 | _ | 1 | 1 | | |
| | Q012042000 | TORNILLO EXAGONAL M6x15 | HEXAGONAL BOLT M6x15 | _ | 1 | 1 | _ | 1 | 1 | | |
| 12 | R095009000 | DUCHA COMPLETA | COMPLETE SHOWER | _ | 1 | 1 | _ | 1 | 1 | | |
| | Q042022000 | TORNILLO AVELLANADO M4x15 | COUNTERSUNK BOLT M4x15 | _ | 3 | 3 | _ | 3 | 3 | | |

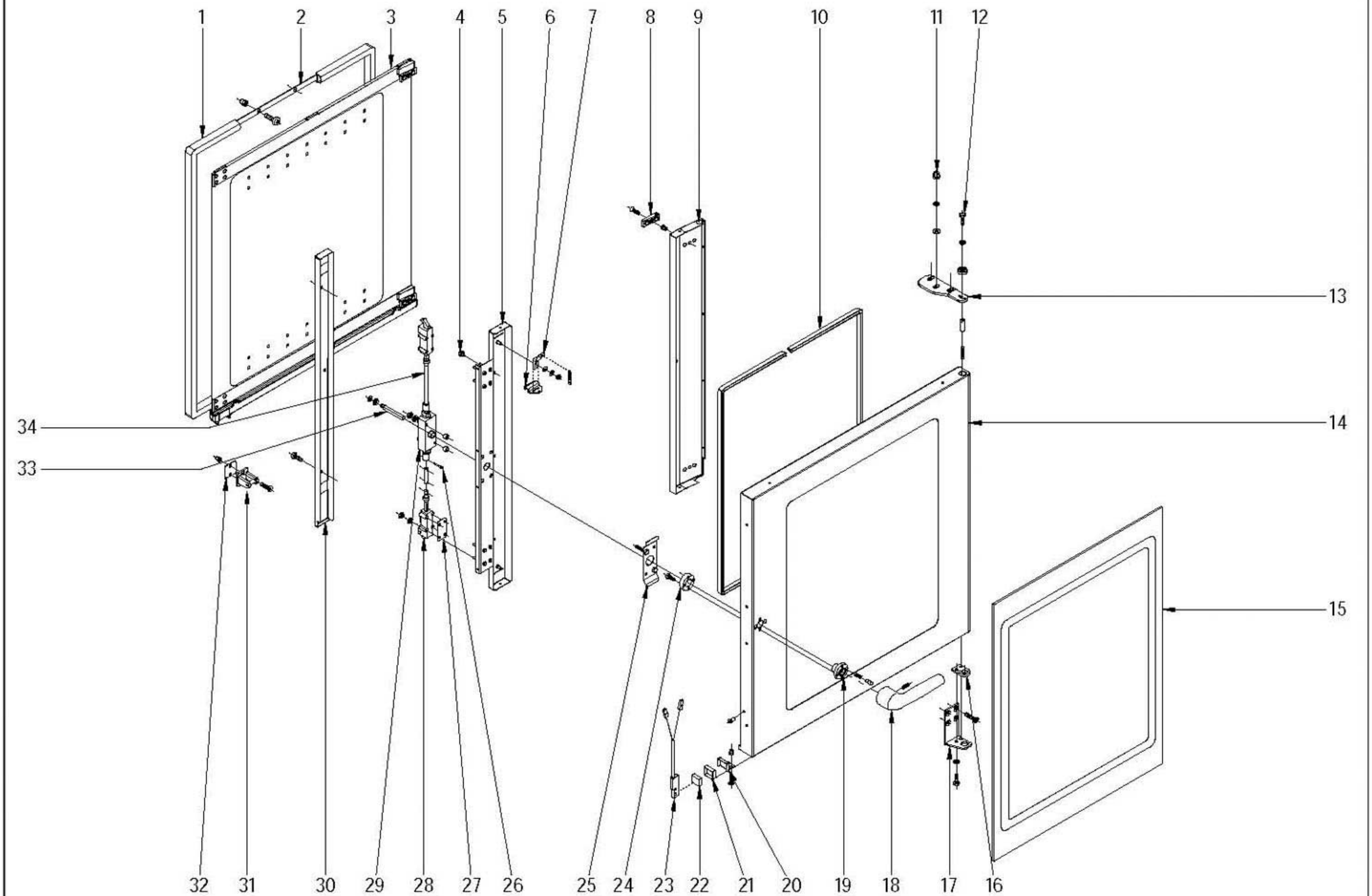


| N plano | Firma | Fecha | Aparato | PUERTA | Lamina | |
|---|---|---|---|---|---|---|
| C-1960 | | 2008-02 | HORNOS HEI; HEM; HEP 6/11-10/11 | | 2 | Fagor Industrial S.Coop. FAGOR<br>Onate |

| MOD. | HORNOS | ZONA | PUERTA | PLANO | C-1960 |
|---|---|---|---|---|---|

| ITEM | CODIGO | DENOMINACION | TEXTO | HEI 6/11 | HEM 6/11 | HEP 6/11 | HEI 10/11 | HEM 10/11 | HEP 10/11 | | NOTAS |
|---|---|---|---|---|---|---|---|---|---|---|---|
| | **1100003129** | **KIT PUERTA 6/11 COMPLETA** | **DOOR KIT 6/11 COMPLETE** | 1 | 1 | 1 | _ | _ | _ | | |
| | **1100003131** | **KIT PUERTA 10/11 COMPLETA** | **DOOR KIT 10/11 COMPLETE** | _ | _ | _ | 1 | 1 | 1 | | |
| 1 | R660503000 | JUNTA DE PUERTA 6-11 | DOOR SEAL 6-11 | 1 | 1 | 1 | _ | _ | _ | | |
| 1 | R670500000 | JUNTA DE PUERTA 10-11 | DOOR SEAL 10-11 | _ | _ | _ | 1 | 1 | 1 | | |
| 2 | R660526000 | FIJACION JUNTA COMPLETA 6-11 | COMPLETE SEAL ATTACHMENT | 1 | 1 | 1 | _ | _ | _ | | |
| 2 | R670513000 | FIJACION JUNTA COMPLETA 10-11 | COMPLETE SEAL ATTACHMENT | _ | _ | _ | 1 | 1 | 1 | | |
| | Q032021000 | TORNILLO ALOMADO M4X10 | CURVED SCREW M4X10 | 28 | 28 | 28 | 28 | 28 | 28 | | |
| | Q222041000 | REMACHE EXAGONAL M4 (INOX) | HEXAGONAL RIVET M4 (INOX) | 28 | 28 | 28 | 28 | 28 | 28 | | |
| **3** | **1100003130** | **KIT CRISTAL INTER. 6/11 COMPL.** | **INTER. GLASS KIT 6/11 COMP.** | 1 | 1 | 1 | _ | _ | _ | | |
| **3** | **1100003132** | **KIT CRISTAL INTER. 10/11 COMPL.** | **INTER. GLASS KIT 10/11 COMP.** | _ | _ | _ | 1 | 1 | 1 | | |
| 4 | R670617000 | TOPE CRISTAL INTERIOR 10/11 | INTERIOR GLASS BUFFER 10/11 | 5 | 5 | 5 | 6 | 6 | 6 | | |
| 5 | R660616000 | CONTRAPUERTA MANILLA 6/11 | DOOR REVERSE HANDLE 6/11 | 1 | 1 | 1 | _ | _ | _ | | |
| 5 | R670633000 | CONTRAPUERTA MANILLA 10/11 | DOOR REVERSE HANDLE 10/11 | _ | _ | _ | 1 | 1 | 1 | | |
| 6 | R670613000 | PESTILLO 10/11 | LATCH 10/11 | 2 | 2 | 2 | 2 | 2 | 2 | | |
| 7 | R670612000 | BASE DE PESTILLO | LATCH BASE | 2 | 2 | 2 | 2 | 2 | 2 | | |
| | Q302022000 | ARANDELA 16X6X1.2 A.304 | WASHER 16X6X1.2 A.304 | 2 | 2 | 2 | 2 | 2 | 2 | | |
| | Q162040000 | TUERCA EXAGONAL M6 | HEXAGONAL NUT M6 | 2 | 2 | 2 | 2 | 2 | 2 | | |
| | Q242040000 | ARANDELA ABANICO A6 A.304 | FAN WASHER A6 A.304 | 2 | 2 | 2 | 2 | 2 | 2 | | |
| | R660605000 | MUELLE TENSOR | TENSIONING SPRING | 2 | 2 | 2 | 2 | 2 | 2 | | |
| 8 | R670615000 | BASE DE BISAGRA | HINGE BASE | 2 | 2 | 2 | 2 | 2 | 2 | | |
| | Q222011000 | REMACHE EXAGONAL M.5 | HEXAGONAL RIVET M.5 | 2 | 2 | 2 | 2 | 2 | 2 | | |
| | Q042032000 | TORNILLO AVELLANADO M5X15 | COUNTERSUNK BOLT M5x15 | 2 | 2 | 2 | 2 | 2 | 2 | | |
| 9 | R660614000 | CONTRAPUERTA BISAGRA 6/11 | DOOR REVERSE HINGE 6/11 | 1 | 1 | 1 | _ | _ | _ | | |
| 9 | R670631000 | CONTRAPUERTA BISAGRA 10/11 | DOOR REVERSE HINGE 10/11 | _ | _ | _ | 1 | 1 | 1 | | |
| 10 | 3715200000 | JUNTA CRISTAL | WINDOW SEAL | 2 | 2 | 2 | 2 | 2 | 2 | | |
| 11 | Q212051000 | TUERCA SOMBRERETE M8 | COWL NUT M8 | 3 | 3 | 3 | 3 | 3 | 3 | | |
| | Q242050000 | ARANDELA ABANICO A8 A.304 | FAN WASHER A8 A.304 | 3 | 3 | 3 | 3 | 3 | 3 | | |
| | Q302025000 | ARANDELA 8,4x20x1,5 A.304 | WASHER 8.4x20x1.5 A.304 | 3 | 3 | 3 | 3 | 3 | 3 | | |
| 12 | Q012042000 | TORNILLO EXAGONAL M6x15 | HEXAGONAL BOLT M6x15 | 1 | 1 | 1 | 1 | 1 | 1 | | |
| | Q242040000 | ARANDELA ABANICO A6 A.304 | FAN WASHER A6 A.304 | 1 | 1 | 1 | 1 | 1 | 1 | | |
| | R662807000 | ARANDELA AMARRE | ANCHORAGE WASHER | 1 | 1 | 1 | 1 | 1 | 1 | | |

| MOD. | HORNOS | ZONA | PUERTA | PLANO | C-1960 |
|---|---|---|---|---|---|

| ITEM | CODIGO | DENOMINACION | TEXTO | HEI 6/11 | HEM 6/11 | HEP 6/11 | HEI 10/11 | HEM 10/11 | HEP 10/11 | | NOTAS |
|---|---|---|---|---|---|---|---|---|---|---|---|
| 13 | T130500000 | BISAGRA SUPERIOR | UPPER HINGE | 1 | 1 | 1 | 1 | 1 | 1 | | |
| | R660534000 | EJE SUPERIOR | UPPER SHAFT | 1 | 1 | 1 | 1 | 1 | 1 | | |
| | Z850519000 | RESORTE 06329 | SPRING 06329 | 1 | 1 | 1 | 1 | 1 | 1 | | |
| 14 | R660612000 | PANEL PUERTA 6/11 | DOOR PANEL 6/11 | 1 | 1 | 1 | _ | _ | _ | | |
| 14 | R670629000 | PANEL PUERTA 10-11 | DOOR PANEL 10-11 | _ | _ | _ | 1 | 1 | 1 | | |
| | Q412002000 | REMACHE AVINOX Ø4x10MM | RIVET AVINOX Ø4x10MM | 14 | 14 | 14 | 14 | 14 | 14 | | |
| 15 | R660610000 | CRISTAL EXTERIOR 6/11 | EXTERIOR GLASS 6/11 | 1 | 1 | 1 | _ | _ | _ | | |
| 15 | R670627000 | CRISTAL EXTERIOR 10/11 | EXTERIOR GLASS 10/11 | _ | _ | _ | 1 | 1 | 1 | | |
| 16 | R660549000 | GUIA EJE INFERIOR FUNDIDO | LOWER SHAFT GUIDE, CAST IRC | 1 | 1 | 1 | 1 | 1 | 1 | | |
| | Q062040000 | TORNILLO AVELLANADO M6X16 | COUNTERSUNK BOLT M6x16 | 4 | 4 | 4 | 4 | 4 | 4 | | |
| 17 | R660551500 | BISAGRA INFERIOR PLEGADA | LOWER FOLDER HINGE | 1 | 1 | 1 | 1 | 1 | 1 | | |
| | Q242040000 | ARANDELA ABANICO A6 A.304 | FAN WASHER A6 A.304 | 2 | 2 | 2 | 2 | 2 | 2 | | |
| | Q012041000 | TORNILLO EXAGONAL M6x10 A304 | HEXAGONAL BOLT M6x10 A304 | 2 | 2 | 2 | 2 | 2 | 2 | | |
| 18 | T130502000 | MANILLA COMPLETA | COMPLETE HANDLE | 1 | 1 | 1 | 1 | 1 | 1 | | |
| | Q132042000 | VARILLA ROSCADA M6X15 | THREADED ROD M6X15 | 1 | 1 | 1 | 1 | 1 | 1 | | |
| | T130510000 | TAPON Ø 16 BAGAL Ext. | COVER Ø 16 BAGAL Ext. | 1 | 1 | 1 | 1 | 1 | 1 | | |
| 19 | T130515000 | GUIA MANILLA | HANDLE GUIDE | 1 | 1 | 1 | 1 | 1 | 1 | | |
| | T130507000 | PITON ENGANCHE PUERTA | DOOR FASTENER SPIKE | 2 | 2 | 2 | 2 | 2 | 2 | | |
| | T130506000 | RESORTE 34548 | SPRING 34548 | 2 | 2 | 2 | 2 | 2 | 2 | | |
| 20 | T130513000 | SOPORTE IMAN | MAGNET BRACKET | 1 | 1 | 1 | 1 | 1 | 1 | | |
| | Q222011000 | REMACHE EXAGONAL M.5 | HEXAGONAL RIVET M.5 | 1 | 1 | 1 | 1 | 1 | 1 | | |
| | Q032031000 | TORNILLO ALOMADO M5X10 | CURVED SCREW M5X10 | 1 | 1 | 1 | 1 | 1 | 1 | | |
| 21 | Z200507000 | PROTECTOR IMAN | MAGNET PROTECTOR | 1 | 1 | 1 | 1 | 1 | 1 | | |
| 22 | Z200506000 | IMAN | MAGNET | 1 | 1 | 1 | 1 | 1 | 1 | | |
| 23 | Z100522000 | INTERRUPTOR MAGNETICO | MAGNETIC SWITCH | 1 | 1 | 1 | 1 | 1 | 1 | | |
| 24 | T130514000 | SOPORTE RESORTE | SPRING SUPPORT | 1 | 1 | 1 | 1 | 1 | 1 | | |
| | Q032032000 | TORNILLO ALOMADO M5x15 | CURVED SCREW M5X15 | 2 | 2 | 2 | 2 | 2 | 2 | | |
| 25 | T130511000 | SUPLEMENTO SUJ. CERRADURA | ANCHORAGE SUPPL. LOCK | 1 | 1 | 1 | 1 | 1 | 1 | | |
| 26 | Q352001000 | PASADOR DE ALETAS 2X20 | COTTER PIN 2X20 | 2 | 2 | 2 | 4 | 4 | 4 | | |
| 27 | T080503000 | SUPLEMENTO ELEMENTO CIERRE | SUPPLEMENT LOCK ELEMENT | 6 | 6 | 6 | 6 | 6 | 6 | | |
| | | | | | | | | | | | |

| MOD. | HORNOS | ZONA | PUERTA | PLANO | C-1960 |
|---|---|---|---|---|---|

| ITEM | CODIGO | DENOMINACION | TEXTO | HEI 6/11 | HEM 6/11 | HEP 6/11 | HEI 10/11 | HEM 10/11 | HEP 10/11 | | NOTAS |
|---|---|---|---|---|---|---|---|---|---|---|---|
| 28 | T080504000 | ELEMENTO CIERRE | LOCK ELEMENT | 2 | 2 | 2 | 2 | 2 | 2 | | |
| | Q262040000 | ARANDELA GROW. A6 A.304 | WASHER GROW. A6 A.304 | 6 | 6 | 6 | 8 | 8 | 8 | | |
| | Q162040000 | TUERCA EXAGONAL M6 | HEXAGONAL NUT M6 | 6 | 6 | 6 | 8 | 8 | 8 | | |
| 29 | T130509000 | MECANISMO CIERRE | LOCK MECHANISM | 1 | 1 | 1 | 1 | 1 | 1 | | |
| | Q262040000 | ARAND.GROW. A6 A.304 | WASHER GROW. A6 A.304 | 2 | 2 | 2 | 2 | 2 | 2 | | |
| | Q162040000 | TUERCA EXAGONAL M6 | HEXAGONAL NUT M6 | 2 | 2 | 2 | 2 | 2 | 2 | | |
| | Z608410000 | CASQUILLO AMARRE TECLADO | KEYBOARD ANCHORAGE BUSHI | 2 | 2 | 2 | 2 | 2 | 2 | | |
| 30 | T080502000 | TAPA CIERRE PUERTA 6/11 | DOOR LOCK COVER 6/11 | 1 | 1 | 1 | _ | _ | _ | | |
| 30 | T110502000 | TAPA CIERRE PUERTA 20/11 | DOOR LOCK COVER 20/11 | _ | _ | _ | 1 | 1 | 1 | | |
| | Q032021000 | TORNILLO ALOMADO M4X10 | CURVED SCREW M4X10 | 4 | 4 | 4 | 4 | 4 | 4 | | |
| | Q222041000 | REMACHE EXAGONAL M4 (INOX) | HEXAGONAL RIVET M4 (INOX) | 4 | 4 | 4 | 4 | 4 | 4 | | |
| 31 | T110506000 | ENGANCHE PUERTA | DOOR FASTENER | 2 | 2 | 2 | 2 | 2 | 2 | | |
| | Q043145000 | TORN. AVELLANADO 6X30 LATON | HEXAGONAL BRASS COUNTERS | 4 | 4 | 4 | 4 | 4 | 4 | | |
| 32 | R660538000 | CALZO DE ENGANCHE | FASTENER WEDGE | 6 | 6 | 6 | 6 | 6 | 6 | | |
| | Q221343000 | REMACHE EXAGONAL M.6 | HEXAGONAL RIVET M.6 | 4 | 4 | 4 | 4 | 4 | 4 | | |
| 33 | T130508000 | EJE DE MANILLA PUERTA | DOOR HANDLE SHAFT | 1 | 1 | 1 | 1 | 1 | 1 | | |
| | T130505000 | CASQUILLO | BUSHING | 1 | 1 | 1 | 1 | 1 | 1 | | |
| 34 | R020502000 | TUBO ALARGADERA 10-11 | EXTENSION PIPE 10-11 | _ | _ | _ | 2 | 2 | 2 | | |

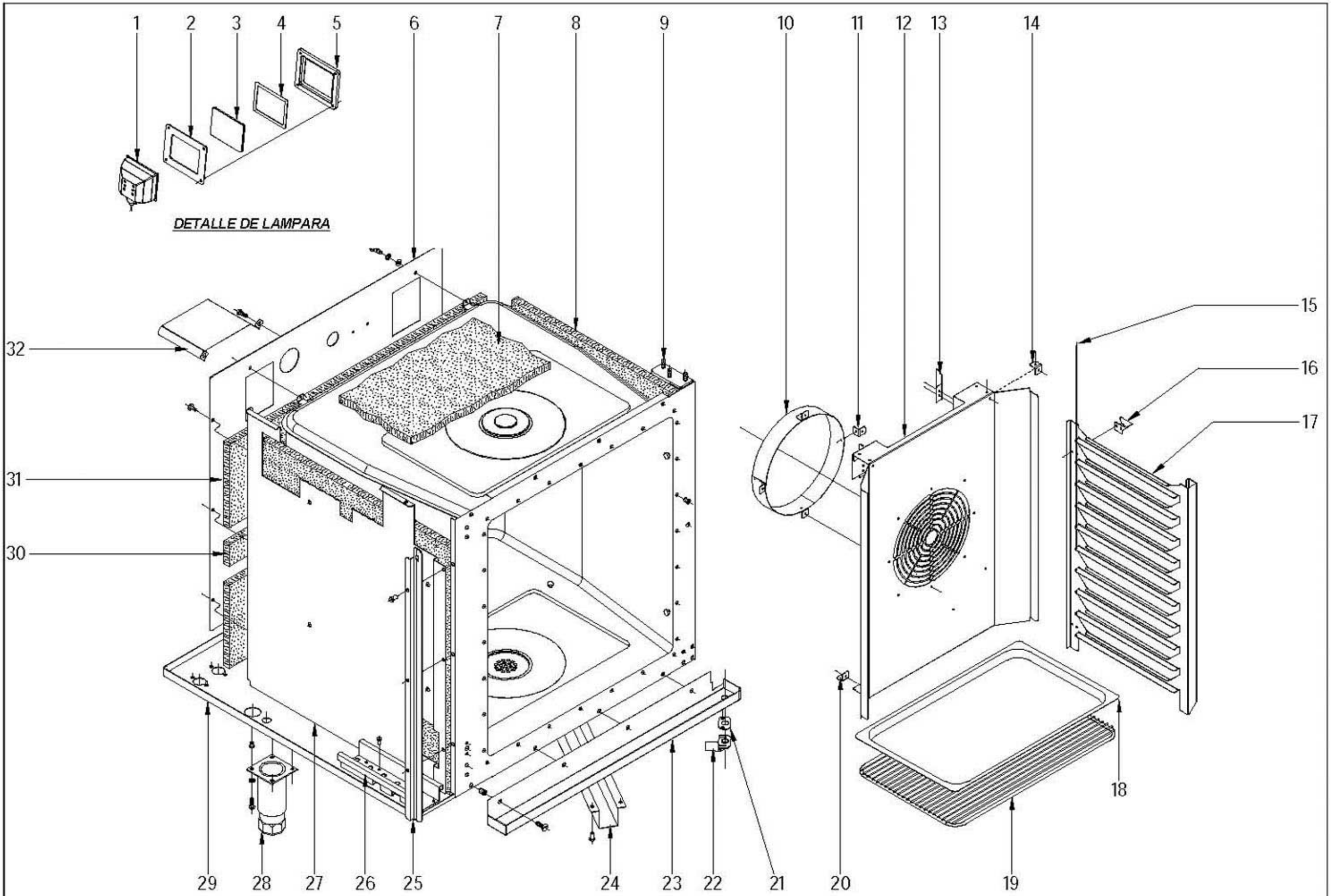


| N plano | Firma | Fecha | Aparato | Lamina | |
|---|---|---|---|---|---|
| C-1961 | | 2008-02 | MUEBLE INTERIOR<br>HORNOS HEI; HEM; HEP 6/11-10/11 | 3 | Fagor Industrial S.Coop. FAGOR<br>Oñate |

| MOD. | HORNOS | ZONA | MUEBLE INTERIOR | PLANO | C-1961 |
|---|---|---|---|---|---|

| ITEM | CODIGO | DENOMINACION | TEXTO | HEI 6/11 | HEM 6/11 | HEP 6/11 | HEI 10/11 | HEM 10/11 | HEP 10/11 | | NOTAS |
|---|---|---|---|---|---|---|---|---|---|---|---|
| 1 | T303023000 | PORTALAMPARAS | LAMP HOLDER | 1 | 1 | 1 | 1 | 1 | 1 | | |
| 2 | T303026000 | JUNTA EXTERIOR LAMPARA | LAMP EXTERIOR SEAL | 1 | 1 | 1 | 1 | 1 | 1 | | |
| 3 | T303025000 | CRISTAL LAMPARA | LAMP GLASS | 1 | 1 | 1 | 1 | 1 | 1 | | |
| 4 | T303027000 | JUNTA INTERIOR LAMPARA | LAMP INTERIOR SEAL | 1 | 1 | 1 | 1 | 1 | 1 | | |
| 5 | T303047000 | MARCO LAMPARA | LAMP FRAME | 1 | 1 | 1 | 1 | 1 | 1 | | |
| | R663013000 | LAMPARA 10W-12V | LAMP 10W-12V | 1 | 1 | 1 | 1 | 1 | 1 | | |
| | Q222041000 | REMACHE EXAGONAL M.4 INOX | HEXAGONAL RIVET M4 (INOX) | 4 | 4 | 4 | 4 | 4 | 4 | | |
| | Q032021000 | TORNILLO ALOMADO M4X10 | CURVED SCREW M4X10 | 4 | 4 | 4 | 4 | 4 | 4 | | |
| 6 | R662655000 | SOPORTE AISLANTE POST. 6-11 | REAR INSULATION SUPPORT 6-1 | 1 | 1 | 1 | _ | _ | _ | | |
| 6 | R672608000 | SOPORTE AISLANTE POST. 10/11 | REAR INSULATION SUPPORT 10/ | _ | _ | _ | 1 | 1 | 1 | | |
| | Q151301000 | PHILIPS 8X5/8 | PHILIPS 8X5/8 | 3 | 3 | 3 | 3 | 3 | 3 | | |
| | Q012042000 | TORNILLO EXAGONAL M6x15 | HEXAGONAL BOLT M6x15 | 12 | 12 | 12 | 12 | 12 | 12 | | |
| | Q262040000 | ARANDELA GROW. A6 A.304 | WASHER GROW. A6 A.304 | 12 | 12 | 12 | 12 | 12 | 12 | | |
| | Q232040000 | ARANDELA A6 | WASHER A6 | 12 | 12 | 12 | 12 | 12 | 12 | | |
| | Q221343000 | REMACHE EXAGONAL M.6 | HEXAGONAL RIVET M.6 | 6 | 6 | 6 | 6 | 6 | 6 | | |
| 7 | R662614000 | AISLANTE 650X650X20 | INSULATION 650X650X20 | 5 | 5 | 5 | 5 | 5 | 5 | | |
| 8 | R662613000 | AISLANTE 650X530X20 | INSULATION 650X530X20 | 5 | 5 | 5 | _ | _ | _ | | |
| 8 | R672630000 | AISLANTE 770X650X20 | INSULATION 770X650X20 | _ | _ | _ | 5 | 5 | 5 | | |
| 9 | R692618000 | CUERPO COMPLETO HEI 6/11 | COMPLETE BODY HEI 6/11 | 1 | _ | _ | _ | _ | _ | | |
| 9 | R662697000 | CUERPO COMPLETO HEM 6/11 | COMPLETE BODY HEM 6/11 | _ | 1 | 1 | _ | _ | _ | | |
| 9 | R702609000 | CUERPO COMPLETO HEI 10/11 | COMPLETE BODY HEI 10/11 | _ | _ | _ | 1 | _ | _ | | |
| 9 | R672609000 | CUERPO INTERIOR HEM-10/11 | INNER BODY HEM-10/11 | _ | _ | _ | _ | 1 | 1 | | |
| | R662636000 | REFUERZO BASE CUERPO INTER. | REINFORCEMENT BASE INTER. E | 1 | 1 | 1 | 1 | 1 | 1 | | |
| | Q162040000 | TUERCA EXAGONAL M6 | HEXAGONAL NUT M6 | 8 | 8 | 8 | 8 | 8 | 8 | | |
| | Q232040000 | ARANDELA A6 | WASHER A6 | 8 | 8 | 8 | 8 | 8 | 8 | | |
| | Q262040000 | ARANDELA GROW. A6 A.304 | WASHER GROW. A6 A.304 | 8 | 8 | 8 | 8 | 8 | 8 | | |
| | Q222041000 | REMACHE EXAGONAL M4 (INOX) | HEXAGONAL RIVET M4 (INOX) | 28 | 28 | 28 | 28 | 28 | 28 | | |
| 10 | T132644000 | SUPLEMENT. CUBREVENTILADOR | SUPPLEMENT. FAN COVER | 1 | 1 | 1 | 1 | 1 | 1 | | |
| S/Nº | T322607000 | REDUCC. CUBREVENT. 60HzD160 | FANCOVER REDUC. 60HzD160 | 1 | 1 | 1 | 1 | 1 | 1 | | SOLO HORNOS A 60 HZ |
| 11 | T302643000 | FIJACIÓN SUPLEMENTO | SUPPLEMENTARY FASTENING | 4 | 4 | 4 | 4 | 4 | 4 | | |
| | Q412002000 | REMACHE AVINOX Ø4x10MM | RIVET AVINOX Ø4x10MM | 8 | 8 | 8 | 8 | 8 | 8 | | |

| MOD. | HORNOS | ZONA | MUEBLE INTERIOR | PLANO | C-1961 |
|---|---|---|---|---|---|

| ITEM | CODIGO | DENOMINACION | TEXTO | HEI 6/11 | HEM 6/11 | HEP 6/11 | HEI 10/11 | HEM 10/11 | HEP 10/11 | | NOTAS |
|---|---|---|---|---|---|---|---|---|---|---|---|
| 12 | R692615000 | CUBREVENTILADOR 6/11 | FAN COVER 6/11 | 1 | 1 | 1 | _ | _ | _ | | |
| 12 | R672611000 | CUBREVENTILADOR 10/11 | FAN COVER 10/11 | _ | _ | _ | 1 | 1 | 1 | | |
| | Q152014000 | PERNO SOLD.M5X10 | WELDED ROD M5X10 | 2 | 2 | 2 | 2 | 2 | 2 | | |
| 13 | R092677000 | ESCUADRA SUJECCION | FASTENING BRACKET | 2 | 2 | 2 | 2 | 2 | 2 | | |
| | Q412002000 | REMACHE AVINOX Ø4x10MM | RIVET AVINOX Ø4x10MM | 6 | 6 | 6 | 6 | 6 | 6 | | |
| 14 | R092680000 | FIJACIÓN SUPLEMENTO DOBLE | DOUBLE SUPPLEMENT ATTACHM | 2 | 2 | 2 | _ | _ | _ | | |
| 14 | T302643000 | FIJACIÓN SUPLEMENTO | SUPPLEMENTARY FASTENING | _ | _ | _ | 2 | 2 | 2 | | |
| | Q412002000 | REMACHE AVINOX Ø4x10MM | RIVET AVINOX Ø4x10MM | 4 | 4 | 4 | 4 | 4 | 4 | | |
| 15 | R662693000 | TOPE PORTABANDEJAS 6/11 | TRAY HOLDER BUFFER 6/11 | 2 | 2 | 2 | _ | _ | _ | | |
| 15 | R672692000 | TOPE PORTABANDEJAS 10/11 | TRAY HOLDER BUFFER 10/11 | _ | _ | _ | 2 | 2 | 2 | | |
| 16 | R672691000 | ESCUADRA SUJECCION 6-10/11 | FASTENING BRACKET 6-10/11 | 4 | 4 | 4 | 4 | 4 | 4 | | |
| 17 | R692616000 | GUIA BANDEJAS DERECHA 6/11 | RIGHT TRAY GUIDE 6/11 | 1 | 1 | 1 | _ | _ | _ | | |
| 17 | R672612000 | GUIA BANDEJAS DERECHA 10/11 | RIGHT TRAY GUIDE 10/11 | _ | _ | _ | 1 | 1 | 1 | | |
| S/Nº | R692617000 | GUIA BANDEJAS IZQUIERDA 6/11 | LEFT TRAY GUIDE 6/11 | 1 | 1 | 1 | _ | _ | _ | | |
| S/Nº | R672613000 | GUIA BANDEJAS IZQUIERDA 10/11 | LEFT TRAY GUIDE 10/11 | _ | _ | _ | 1 | 1 | 1 | | |
| 18 | R252816000 | BANDEJA 1/1 P:20 | TRAY 1/1 P:20 | 1 | 1 | 1 | 1 | 1 | 1 | | |
| 19 | R672665000 | PARRILLA 1X1 (REF. 2025201) | GRILLE 1X1 (REF. 2025201) | 1 | 1 | 1 | 1 | 1 | 1 | | |
| 20 | T302643000 | FIJACIÓN SUPLEMENTO | SUPPLEMENTARY FASTENING | _ | _ | _ | 2 | 2 | 2 | | |
| | Q412002000 | REMACHE AVINOX Ø4x10MM | RIVET AVINOX Ø4x10MM | _ | _ | _ | 4 | 4 | 4 | | |
| 21 | T302845000 | JUNTA RECOGEAGUAS | WATER COLLECTOR SEAL | 1 | 1 | 1 | 1 | 1 | 1 | | |
| | Q242030000 | ARANDELA ABANICO A5 A.304 | FAN WASHER A5 A.304 | 2 | 2 | 2 | 2 | 2 | 2 | | |
| | Q213131000 | TUERCA SOMBRERETE M5 | COWL NUT M5 | 2 | 2 | 2 | 2 | 2 | 2 | | |
| 22 | T302844000 | DESAGÜE RECOGEAGUAS | WATER COLLECTOR DRAIN | 1 | 1 | 1 | 1 | 1 | 1 | | |
| 23 | T112852000 | RECOGEAGUAS COMPL. 6 10/11 | COMPL. WATER COLLECTOR 6 1 | 1 | 1 | 1 | 1 | 1 | 1 | | |
| | Q221343000 | REMACHE EXAGONAL M6 | HEXAGONAL RIVET M6 | 4 | 4 | 4 | 4 | 4 | 4 | | |
| | Q152017000 | TORNILLO AMARRE M6X13 A304 | FASTENING BOLT M6X13 A304 | 4 | 4 | 4 | 4 | 4 | 4 | | |
| 24 | R672833000 | CUBRE DESAGUE 6/11 10/11 | DRAIN COVER 6/11 10/11 | 1 | 1 | 1 | 1 | 1 | 1 | | |
| 25 | R662682000 | PROTECTOR PORTAMANDOS 6-11 | CONTROL HOLDER PROTECTOF | 1 | 1 | 1 | _ | _ | _ | | |
| 25 | R672674000 | PROTECCION PORTAMANDOS | CONTROL HOLDER PROTECTOR | _ | _ | _ | 1 | 1 | 1 | | |
| | Q412002000 | REMACHE AVINOX Ø4x10MM | RIVET AVINOX Ø4x10MM | 3 | 3 | 3 | 3 | 3 | 3 | | |
| | | | | | | | | | | | |

| MOD. | HORNOS | ZONA | MUEBLE INTERIOR | PLANO | C-1961 |
|---|---|---|---|---|---|

| ITEM | CODIGO | DENOMINACION | TEXTO | HEI 6/11 | HEM 6/11 | HEP 6/11 | HEI 10/11 | HEM 10/11 | HEP 10/11 | | NOTAS |
|---|---|---|---|---|---|---|---|---|---|---|---|
| 26 | R342802000 | GUIA CUADRO ELECTRICO " | SWITCHBOARD GUIDE" | 1 | 1 | 1 | 1 | 1 | 1 | | |
| | Q412002000 | REMACHE AVINOX Ø4x10MM | RIVET AVINOX Ø4x10MM | 8 | 8 | 8 | 8 | 8 | 8 | | |
| 27 | T072614000 | SOPORTE LATER. AISLANTE 6-11 | SIDE SUPPORT INSULATION 6-11 | 1 | 1 | 1 | _ | _ | _ | | |
| 27 | T112624000 | SOPORTE LATER. AISLANTE 10/11 | SIDE SUPPORT INSULATION 10/1 | _ | _ | _ | 1 | 1 | 1 | | |
| 28 | X260151000 | PATA REGULABLE | ADJUSTABLE LEG | 4 | 4 | 4 | 4 | 4 | 4 | | |
| | Q221343000 | REMACHE EXAGONAL M6 | HEXAGONAL RIVET M6 | 16 | 16 | 16 | 16 | 16 | 16 | | |
| | Q242040000 | ARANDELA ABANICO A6 A.304 | FAN WASHER A6 A.304 | 16 | 16 | 16 | 16 | 16 | 16 | | |
| | Q012042000 | TORNILLO EXAGONAL M6x15 | HEXAGONAL BOLT M6x15 | 16 | 16 | 16 | 16 | 16 | 16 | | |
| 29 | R665077000 | BASE EXTERIOR DE HORNO 10/11 | OVEN OUTER BASE 10 / 11 | 1 | 1 | 1 | 1 | 1 | 1 | | |
| 30 | R662616000 | AISLANTE 560X60X20 | INSULATION 560X60X20 | 3 | 3 | 3 | 3 | 3 | 3 | | |
| 31 | R662615000 | AISLANTE 800X110X20 | INSULATION 800X110X20 | 2 | 2 | 2 | _ | _ | _ | | |
| 31 | R672631000 | AISLANTE 670X200X20 | INSULATION 670X200X20 | _ | _ | _ | 2 | 2 | 2 | | |
| 32 | T142635000 | TEJADILLO MOTOR | MOTOR ROOF | 1 | 1 | 1 | 1 | 1 | 1 | | |

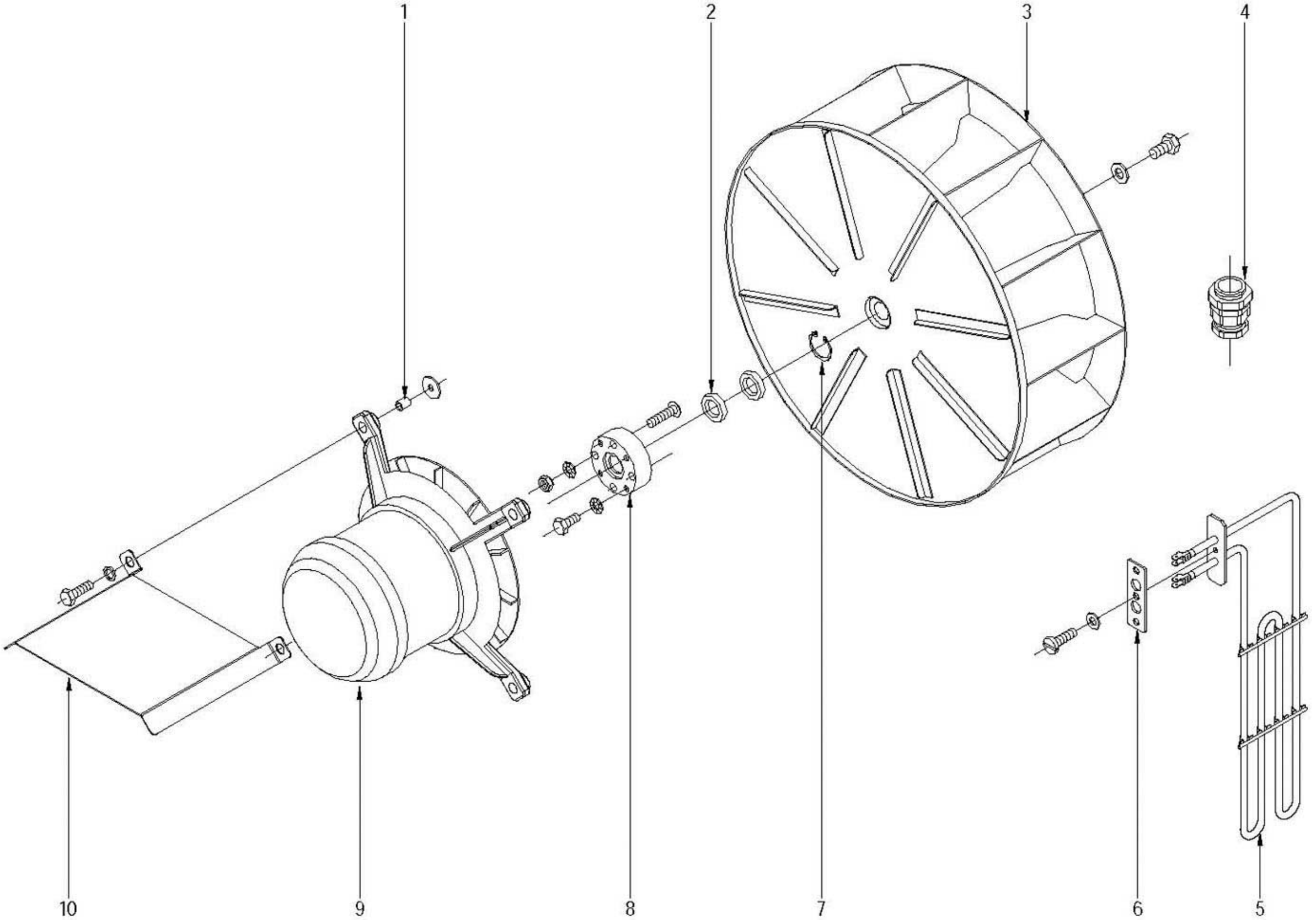


| N plano | Firma | Fecha | Aparato | Lamina | |
|---|---|---|---|---|---|
| C-1962 | | 2008-02 | TURBINA<br>HORNOS HEI; HEM; HEP 6/11-10/11 | 4 | Fagor Industrial S.Coop.<br>Oñate |

| MOD. | HORNOS | ZONA | TURBINA | PLANO | C-1962 |
|---|---|---|---|---|---|

| ITEM | CODIGO | DENOMINACION | TEXTO | HEI 6/11 | HEM 6/11 | HEP 6/11 | HEI 10/11 | HEM 10/11 | HEP 10/11 | | NOTAS |
|---|---|---|---|---|---|---|---|---|---|---|---|
| 1 | R663057000 | CASQUILLO AMARRE MOTOR | MOTOR FASTENING BUSHING | _ | 4 | 4 | _ | 4 | 4 | | |
| | Q301304000 | ARANDELA PLANA 23X6.5X2 | FLAT WASHER 23X6.5X2 | 4 | 4 | 4 | 4 | 4 | 4 | | |
| 2 | R662627000 | RETEN 17X28X7V | SEAL 17X28X7V | 2 | 2 | 2 | 2 | 2 | 2 | | |
| 3 | R703050000 | TURBINA REC Ø350X127 HANNING | STRAIGHT FAN Ø350X127 HANNI | 1 | _ | _ | 1 | _ | _ | | |
| 3 | T493017000 | TURBINA RECTA Ø350X127 FIR | STRAIGHT FAN Ø350X127 FIR | _ | 1 | 1 | _ | 1 | 1 | | |
| | R763010000 | ARANDELA SEGURIDAD HANNING | SAFETY WASHER HANNING | 1 | 1 | 1 | 1 | 1 | 1 | | |
| | Q012063000 | TORNIL. EXAGONAL M10X20 A.304 | HEXAGONAL BOLT M10X20 A.304 | 1 | 1 | 1 | 1 | 1 | 1 | | |
| 4 | R033002000 | PRENSA ESTOPAS | STUFFING BOX | 1 | 1 | 1 | 1 | 1 | 1 | | |
| 5 | R663016000 | RESISTENCIA CONVECCION 230V. | CONVECTION RESISTOR 230V. | 6 | 6 | 6 | _ | _ | _ | | |
| 5 | R673002000 | RESISTENCIA CONVECCION | CONVECTION RESISTOR | _ | _ | _ | 6 | 6 | 6 | | |
| 6 | R693017000 | JUNTA RESISTENCIAS 6-11 | RESISTOR SEAL 6-11 | 6 | 6 | 6 | _ | _ | _ | | |
| 6 | R673063000 | JUNTA RESISTENCIAS 10-11 | RESISTOR SEAL 10-11 | _ | _ | _ | 6 | 6 | 6 | | |
| | Q232040000 | ARANDELA A6 | WASHER A6 | 18 | 18 | 18 | 18 | 18 | 18 | | |
| | Q242040000 | ARANDELA ABANICO A6 A.304 | FAN WASHER A6 A.304 | 18 | 18 | 18 | 18 | 18 | 18 | | |
| | Q012042000 | TORNILLO EXAGONAL M6x15 | HEXAGONAL BOLT M6x15 | 18 | 18 | 18 | 18 | 18 | 18 | | |
| 7 | Q302023000 | ANILLO DE SEGURIDAD Ø 28X1.2 | SAFETY RING Ø 28X1.2 | 1 | 1 | 1 | 1 | 1 | 1 | | |
| 8 | R662684000 | CASQUILLO RETEN | SEAL BUSHING | 1 | 1 | 1 | 1 | 1 | 1 | | |
| | R662685000 | JUNTA CASQUILLO RETEN | SEAL BUSHING GASKET | 1 | 1 | 1 | 1 | 1 | 1 | | |
| | Q262040000 | ARANDELA GROW. A6 A.304 | WASHER GROW. A6 A.304 | 4 | 4 | 4 | 4 | 4 | 4 | | |
| | Q162040000 | TUERCA EXAGONAL M6 | HEXAGONAL NUT M6 | 4 | 4 | 4 | 4 | 4 | 4 | | |
| | Q232040000 | ARANDELA A6 | WASHER A6 | 4 | 4 | 4 | 4 | 4 | 4 | | |
| | Q262040000 | ARANDELA GROW. A6 A.304 | WASHER GROW. A6 A.304 | 4 | 4 | 4 | 4 | 4 | 4 | | |
| | Q162040000 | TUERCA EXAGONAL M6 | HEXAGONAL NUT M6 | 4 | 4 | 4 | 4 | 4 | 4 | | |
| 9 | R703049000 | MOTOR DOBLE GIRO 1VEL.450W. | DOUBLE ROTATION MOTOR 1VE | 1 | _ | _ | 1 | _ | _ | | |
| 9 | T493003000 | MOTOR 20/21 2V 400V | MOTOR 20/21 2V 400V. | _ | 1 | 1 | _ | 1 | 1 | | |
| 9 | T493004000 | MOTOR 20/21 2V 230V. | MOTOR 20/21 2V 230V. | _ | 1 | 1 | _ | 1 | 1 | | |
| | Q012046000 | TORN.EXA. M6X40 A.304 | HEX BOLT M6X40 A.304 | 4 | 4 | 4 | 4 | 4 | 4 | | |
| | Q242050000 | ARANDELA ABANICO A8 A.304 | FAN WASHER A8 A.304 | 4 | 4 | 4 | 4 | 4 | 4 | | |
| | Q162050000 | TUERCA EXAGONAL M8x1 INOX. | HEXAGONAL NUT M8x1 INOX. | 4 | 4 | 4 | 4 | 4 | 4 | | |
| 10 | T142635000 | TEJADILLO MOTOR | MOTOR ROOF | 1 | 1 | 1 | 1 | 1 | 1 | | |
| | | | | | | | | | | | |

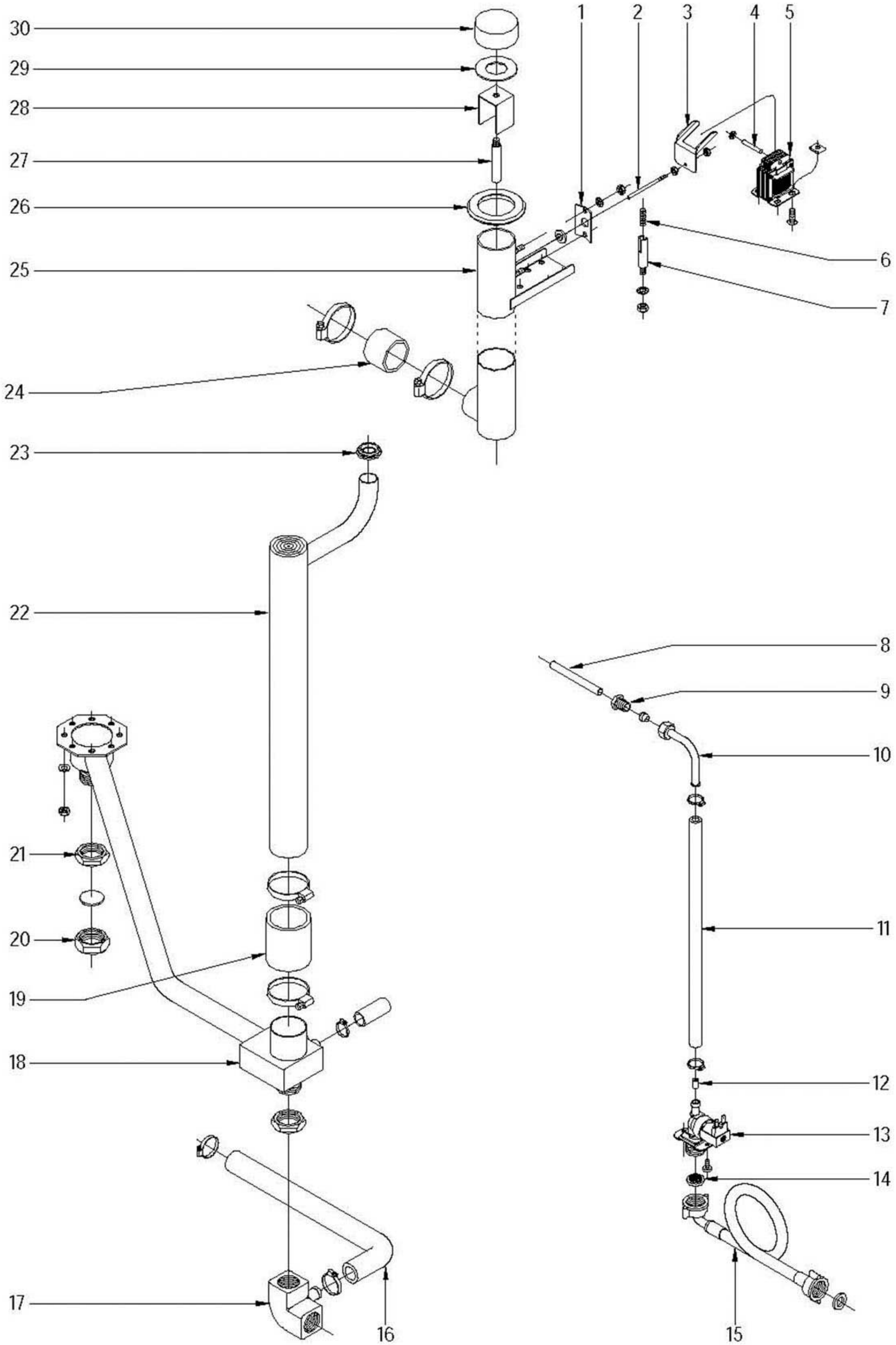


| N plano | Firma | Fecha | Aparato | | Lamina | |
|---|---|---|---|---|---|---|
| C-1963 | | 2008-02 | CIRCUITO DE AGUA<br>HORNOS HEI-6/11; 10/11 | | 5 | Fagor Industrial S.Coop.<br>Onate |

| MOD. | HORNOS | ZONA | CIRCUITO DE AGUA | PLANO | C-1963 |
|---|---|---|---|---|---|

| ITEM | CODIGO | DENOMINACION | TEXTO | HEI 6/11 | HEI 10/11 | | | | | | NOTAS |
|---|---|---|---|---|---|---|---|---|---|---|---|
| 1 | T115105000 | AMARRE CONDUCCION VAHOS | VAPOUR DUCT FASTENING | 1 | 1 | | | | | | |
| | R675033000 | JUNTA PALANCA ACCIONAMIENTO | DRIVE LEVER SEAL | 1 | 1 | | | | | | |
| | Q242030000 | ARANDELA ABANICO A5 A.304 | FAN WASHER A5 A.304 | 2 | 2 | | | | | | |
| | Q162030000 | TUERCA EXAGONAL M5 | HEXAGONAL NUT M5 | 2 | 2 | | | | | | |
| 2 | R675014000 | PALANCA ACCIONAMIENTO | DRIVE LEVER | 1 | 1 | | | | | | |
| 3 | R672640000 | ESCUADRA ACCIONAMIENTO | DRIVE BRACKET | 1 | 1 | | | | | | |
| | Q162020000 | TUERCA EXAGONAL M4 | HEXAGONAL NUT M4 | 2 | 2 | | | | | | |
| | Q242020000 | ARANDELA ABANICO A4 A.304 | FAN WASHER A4 A.304 | 1 | 1 | | | | | | |
| 4 | R675016000 | PASADOR ELECTROIMAN | ELECTROMAGNET PIN | 1 | 1 | | | | | | |
| | Q301035000 | SUJECCION RAPIDA Ø4 | RAPID FASTENING Ø4 | 2 | 2 | | | | | | |
| 5 | R663030000 | ELECTROIMAN JOVE TIPO 501 | ELECTROMAGNET JOVE TYPE 5( | 1 | 1 | | | | | | |
| | Q221009000 | TUERCA RAPIDA SEGURID. AC.RE | RAPID SAFETY NUT AC.RE | 2 | 2 | | | | | | |
| | Q152004000 | TORNILLO APLAST. M5X13 A 304 | MUSHROOM HEAD BOLT M5X13 | 2 | 2 | | | | | | |
| 6 | Z883001000 | RESORTE 20153 | SPRING 20153 | 1 | 1 | | | | | | |
| 7 | R665027000 | GUIA RESORTE | SPRING GUIDE | 1 | 1 | | | | | | |
| | Q242040000 | ARANDELA ABANICO A6 A.304 | FAN WASHER A6 A.304 | 1 | 1 | | | | | | |
| | Q162040000 | TUERCA EXAGONAL M6 | HEXAGONAL NUT M6 | 1 | 1 | | | | | | |
| 8 | R695033000 | TUBO INYECTOR 6/11 | INJECTOR PIPE 6/11 | 1 | 1 | | | | | | |
| 9 | R695003000 | MANGUITO CIERRE | CLOSING SLEEVE | 1 | 1 | | | | | | |
| | R695004000 | BICONO | BICONE | 1 | 1 | | | | | | |
| 10 | R695017000 | TUBO CONDUCCION AGUA | WATER DUCT PIPE | 1 | 1 | | | | | | |
| 11 | 3676900000 | TUBO GOMA NEGRA Ø17*10 | BLACK RUBBER PIPE Ø17*10 | 1 | 1 | | | | | | |
| | Q881302000 | ABRAZADERA ELASTICA 12*20 | ELASTIC CLAMP 12*20 | 2 | 2 | | | | | | |
| 12 | R665041000 | REGULADOR 0,25L. ROJO | REGULATOR 0.25L. RED | 1 | 1 | | | | | | |
| 13 | Z701135000 | ELECT. SIMPLE 220V COD.255.208 | ELECT. SIMPLE 220V COD.255.20 | 1 | 1 | | | | | | |
| | Q032021000 | TORNILLO ALOMADO M4x10 | CURVED SCREW M4X10 | 4 | 4 | | | | | | |
| 14 | Z701132000 | FILTRO DE JUNTA N-3 | SEAL FILTER N-3 | 1 | 1 | | | | | | |
| 15 | Z601114000 | MANGUERA ENTRADA AGUA | WATER INTAKE HOSE | 1 | 1 | | | | | | |
| 16 | 3715600000 | TUBO SILICONA 26X18 | SILICONE PIPE 26X18 | 1 | 1 | | | | | | |
| | Q881305000 | ABRAZADERA 25-40 | CLAMP 25-40 | 2 | 2 | | | | | | |
| | | | | | | | | | | | |

| MOD. | HORNOS | ZONA | CIRCUITO DE AGUA | PLANO | C-1963 |
|---|---|---|---|---|---|

| ITEM | CODIGO | DENOMINACION | TEXTO | HEI 6/11 | HEI 10/11 | | | | | | NOTAS |
|---|---|---|---|---|---|---|---|---|---|---|---|
| 17 | R665080000 | CODO DESAGÜE | DRAINAGE L-BEND | 1 | 1 | | | | | | |
| 18 | R695032000 | TUBO DESAGÜE COMP. HEI 6/11 | COMP. DRAINAGE PIPE HEI6/11 | 1 | 1 | | | | | | |
| 19 | R345020000 | TUBO EMPALME | CONNECTION PIPE | 1 | 1 | | | | | | |
| | Q881307000 | ABRAZADERA 40-60 | CLAMP 40-60 | 2 | 2 | | | | | | |
| 20 | R665053000 | TUERCA TAPON 1" | PLUG NUT 1" | 1 | 1 | | | | | | |
| | R015011000 | ARANDELA Ø32 | WASHER Ø32 | 1 | 1 | | | | | | |
| 21 | Q223014000 | CONTRATUERCA 1 LATON | COUNTERNUT 1 BRASS | 2 | 2 | | | | | | |
| 22 | R695030000 | CHIMENEA RETORNO HEI 6/11 | FLUE PIPE RETURN HEI 6/11 | 1 | _ | | | | | | |
| 22 | R705024000 | CHIMENEA RETORNO HEI 10/11 | FLUE PIPE RETURN HEI 10/11 | _ | 1 | | | | | | |
| 23 | N503017000 | SOPORTE TERMOSTATO 1001713 | THERMOSTAT SUPPORT 100171 | 1 | 1 | | | | | | |
| 24 | 3715800000 | TUBO SILICONA Ø43*51 | SILICONE TUBE Ø43*51 | 1 | 1 | | | | | | |
| | Q881307000 | ABRAZADERA 40-60 | CLAMP 40-60 | 2 | 2 | | | | | | |
| 25 | R695008000 | CONJUNTO CHIMENEA HMI | FLUE PIPE UNIT HMI | 1 | 1 | | | | | | |
| 26 | R662813000 | PASAMUROS CHIMENEA 101003361 | FEEDTHROUGH FLUE PIPE 1010 | 1 | 1 | | | | | | |
| 27 | R675008000 | UNION RETENCION VAPORES | STEAM RETAINER UNION | 1 | 1 | | | | | | |
| 28 | R675005000 | GUIA RETENCION VAPORES | STEAM RETAINER GUIDE | 1 | 1 | | | | | | |
| 29 | R675007000 | JUNTA RETENCION VAPORES | STEAM RETAINER SEAL | 1 | 1 | | | | | | |
| 30 | R675006000 | RETENCION DE VAPORES | STEAM RETAINER | 1 | 1 | | | | | | |

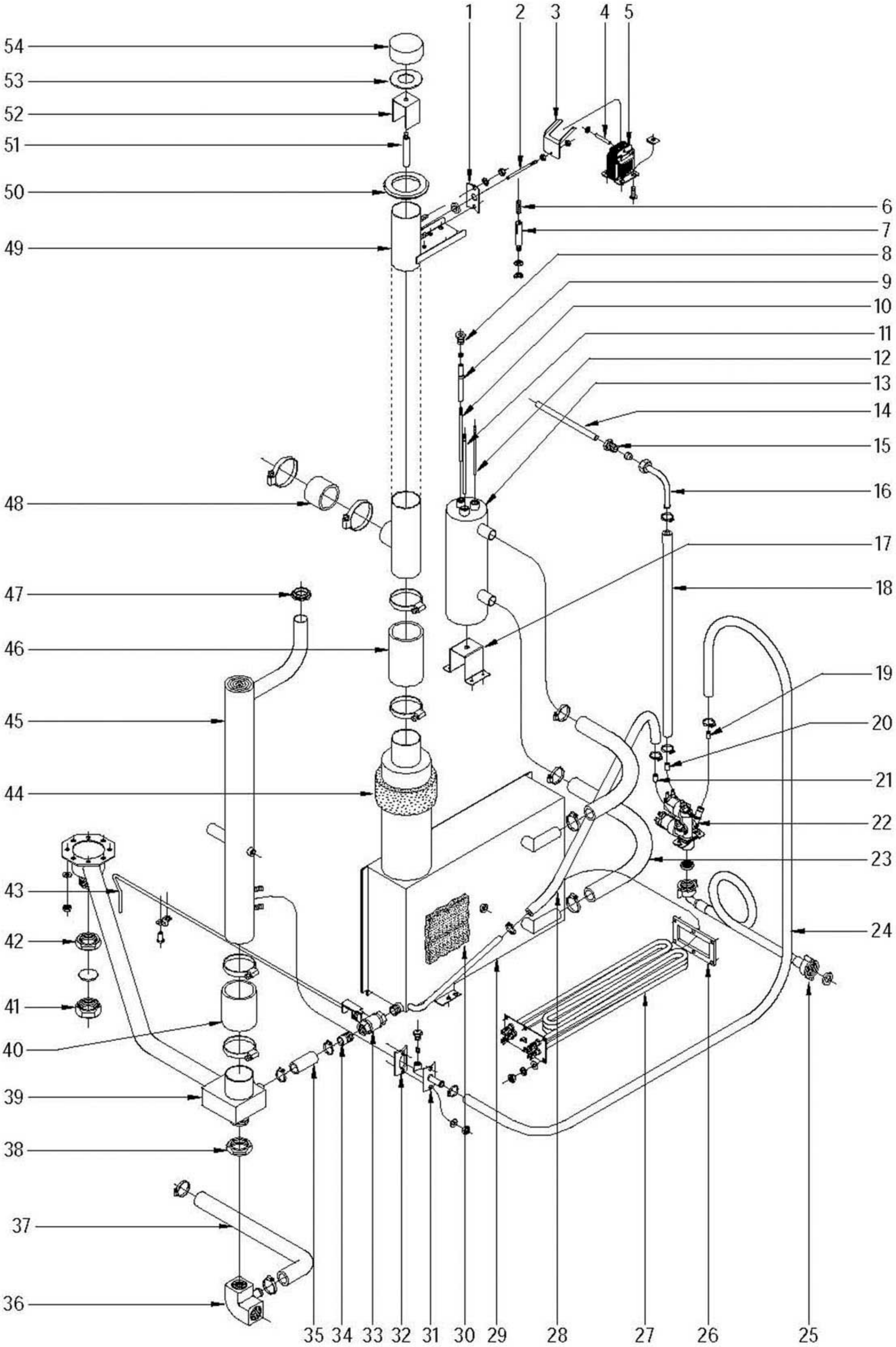


| N plano | Firma | Fecha | Aparato | Lamina | |
|---|---|---|---|---|---|
| C-1964 | | 2008-02 | CIRCUITO DE AGUA<br>HORNOS HEM; HEP 6/11-10/11 | 6 | Fagor Industrial S.Coop. FAGOR<br>Onate |

| MOD. | HORNOS | ZONA | CIRCUITO DE AGUA | PLANO | C-1964 |
|---|---|---|---|---|---|

| ITEM | CODIGO | DENOMINACION | TEXTO | HEM 6/11 | HEP 6/11 | HEM 10/11 | HEP 10/11 | | | | NOTAS |
|---|---|---|---|---|---|---|---|---|---|---|---|
| 1 | T115105000 | AMARRE CONDUCCION VAHOS | VAPOUR DUCT FASTENING | 1 | 1 | 1 | 1 | | | | |
| | R675033000 | JUNTA PALANCA ACCIONAMIENTO | DRIVE LEVER SEAL | 1 | 1 | 1 | 1 | | | | |
| | Q242030000 | ARANDELA ABANICO A5 A.304 | FAN WASHER A5 A.304 | 2 | 2 | 2 | 2 | | | | |
| | Q162030000 | TUERCA EXAGONAL M5 | HEXAGONAL NUT M5 | 2 | 2 | 2 | 2 | | | | |
| 2 | R675014000 | PALANCA ACCIONAMIENTO | DRIVE LEVER | 1 | 1 | 1 | 1 | | | | |
| 3 | R672640000 | ESCUADRA ACCIONAMIENTO | DRIVE BRACKET | 1 | 1 | 1 | 1 | | | | |
| | Q162020000 | TUERCA EXAGONAL M4 | HEXAGONAL NUT M4 | 2 | 2 | 2 | 2 | | | | |
| | Q242020000 | ARANDELA ABANICO A4 A.304 | FAN WASHER A4 A.304 | 1 | 1 | 1 | 1 | | | | |
| 4 | R675016000 | PASADOR ELECTROIMAN | ELECTROMAGNET PIN | 1 | 1 | 1 | 1 | | | | |
| | Q301035000 | SUJECCION RAPIDA Ø 4 | RAPID ATTACHMENT Ø 4 | 2 | 2 | 2 | 2 | | | | |
| 5 | R663030000 | ELECTROIMAN JOVE TIPO 501 | ELECTROMAGNET JOVE TYPE 5( | 1 | 1 | 1 | 1 | | | | |
| | Q221009000 | TUERCA RAPIDA SEGURID. AC.RE | RAPID SAFETY NUT AC.RE | 2 | 2 | 2 | 2 | | | | |
| | Q152004000 | TORNILLO APLAST. M5X13 A 304 | MUSHROOM HEAD BOLT M5X13 | 2 | 2 | 2 | 2 | | | | |
| 6 | Z883001000 | RESORTE 20153 | SPRING 20153 | 1 | 1 | 1 | 1 | | | | |
| 7 | R665027000 | GUIA RESORTE | SPRING GUIDE | 1 | 1 | 1 | 1 | | | | |
| | Q242040000 | ARANDELA ABANICO A6 A.304 | FAN WASHER A6 A.304 | 1 | 1 | 1 | 1 | | | | |
| | Q162040000 | TUERCA EXAGONAL M6 | HEXAGONAL NUT M6 | 1 | 1 | 1 | 1 | | | | |
| 8 | R345058000 | RACORD | CONNECTION | 3 | 3 | 3 | 3 | | | | |
| | Q163020000 | TUERCA EXAGONAL M4 | HEXAGONAL NUT M4 | 6 | 6 | 6 | 6 | | | | |
| 9 | R345059000 | GUIA AISLANTE | INSULATION GUIDE | 3 | 3 | 3 | 3 | | | | |
| 10 | R345063000 | ELECTRODO NIVEL BAJO | LOW LEVEL ELECTRODE | 1 | 1 | 1 | 1 | | | | |
| 11 | R345064000 | ELECTRODO DE MASA | EARTH ELECTRODE | 1 | 1 | 1 | 1 | | | | |
| 12 | R345060000 | ELECTRODO NIVEL ALTO | HIGH LEVEL ELECTRODE | 1 | 1 | 1 | 1 | | | | |
| 13 | T325040000 | CUERPO NIVELES COMPLETO | COMPLETE LEVELS BODY | 1 | 1 | 1 | 1 | | | | |
| | Q232040000 | ARANDELA A6 | WASHER A6 | 1 | 1 | 1 | 1 | | | | |
| | Q262040000 | ARANDELA GROW. A6 A.304 | WASHER GROW. A6 A.304 | 1 | 1 | 1 | 1 | | | | |
| | Q162040000 | TUERCA EXAGONAL M6 | HEXAGONAL NUT M6 | 2 | 2 | 2 | 2 | | | | |
| 14 | R695033000 | TUBO INYECTOR | INJECTOR PIPE | 1 | 1 | 1 | 1 | | | | |
| 15 | R695003000 | MANGUITO CIERRE | CLOSING SLEEVE | 1 | 1 | 1 | 1 | | | | |
| | R695004000 | BICONO | BICONE | 1 | 1 | 1 | 1 | | | | |
| 16 | R695017000 | TUBO CONDUCCION AGUA | WATER DUCT PIPE | 1 | 1 | 1 | 1 | | | | |

| MOD. | HORNOS | ZONA | CIRCUITO DE AGUA | PLANO | C-1964 |
|---|---|---|---|---|---|

| ITEM | CODIGO | DENOMINACION | TEXTO | HEM 6/11 | HEP 6/11 | HEM 10/11 | HEP 10/11 | | | | NOTAS |
|---|---|---|---|---|---|---|---|---|---|---|---|
| 17 | R025032000 | CHAPA CUERPO NIVELES E102011 | PLATE BODY LEVELS E102011 | _ | _ | 1 | 1 | | | | |
| 18 | 3676900000 | TUBO GOMA NEGRA Ø17*10 | BLACK RUBBER PIPE Ø17*10 | 1 | 1 | 1 | 1 | | | | |
| | Q881302000 | ABRAZADERA ELASTICA 12*20 | ELASTIC CLAMP 12*20 | 2 | 2 | 2 | 2 | | | | |
| 19 | P443042000 | REGULADOR 3L. VERDE 254.023 | REGULATOR 3L. GREEN 254.023 | 1 | 1 | 1 | 1 | | | | |
| 20 | R665041000 | REGULADOR 0,25L. ROJO | REGULATOR 0.25L. RED | 1 | 1 | 1 | 1 | | | | |
| 21 | Z601156000 | REGULADOR 8L RO. 254.034 | REGULATOR 8L RED 254.034 | 1 | 1 | 1 | 1 | | | | |
| 22 | Z611123000 | ELECTROV. TRIPLE COD.255.641 | SOLENOID TRIPLE ELBOW.255,6 | 1 | 1 | 1 | 1 | | | | |
| | Q032021000 | TORNILLO ALOMADO M4x10 | CURVED SCREW M4X10 | 4 | 4 | 4 | 4 | | | | |
| 23 | 3715600000 | TUBO SILICONA FORRADO 26X18 | LINED SILICONE TUBE 26X18 | 2 | 2 | 2 | 2 | | | | |
| | Q881304000 | ABRAZADERA 20-32 | CLAMP 20-32 | 4 | 4 | 4 | 4 | | | | |
| 24 | 3676900000 | TUBO GOMA NEGRA Ø17*10 | BLACK RUBBER PIPE Ø17*10 | 1 | 1 | 1 | 1 | | | | |
| | Q881302000 | ABRAZADERA ELASTICA 12*20 | ELASTIC CLAMP 12*20 | 2 | 2 | 2 | 2 | | | | |
| 25 | Z601114000 | MANGUERA ENTRADA AGUA | WATER INTAKE HOSE | 1 | 1 | 1 | 1 | | | | |
| | Z701132000 | FILTRO DE JUNTA N-3 | SEAL FILTER N-3 | 2 | 2 | 2 | 2 | | | | |
| 26 | R145012000 | JUNTA CIERRE RESISTENCIAS | RESISTOR CLOSING SEAL | 1 | 1 | 2 | 2 | | | | |
| 27 | R143000000 | RESISTENCIA 3000WX3 | RESISTOR 3000WX3 | 1 | 1 | 2 | 2 | | | | |
| | Q163030000 | TUERCA EXAGONAL M5 LATON | HEXAGONAL NUT M5 BRASS | 6 | 6 | 12 | 12 | | | | |
| | Q242030000 | ARANDELA ABANICO A5 A.304 | FAN WASHER A5 A.304 | 6 | 6 | 12 | 12 | | | | |
| 28 | 3676900000 | TUBO GOMA NEGRA Ø17*10 | BLACK RUBBER PIPE Ø17*10 | 2 | 2 | 2 | 2 | | | | |
| | Q881302000 | ABRAZADERA ELASTICA 12*20 | ELASTIC CLAMP 12*20 | 4 | 4 | 4 | 4 | | | | |
| 29 | R665042000 | GENERADOR DE VAPOR 6/11 | STEAM GENERATOR 6/11 | 1 | 1 | _ | _ | | | | |
| 29 | R675024000 | GENERADOR DE VAPOR 20/11 | STEAM GENERATOR 20/11 | _ | _ | 1 | 1 | | | | |
| 30 | R665051000 | AISLANTE GENERADOR E-6/11 | GENERATOR INSULATION E-6/11 | 1 | 1 | _ | _ | | | | |
| 30 | R345011000 | AISLANTE GENERADOR E-10-20/11 | GENERATOR INSULATION E-10-2 | _ | _ | 1 | 1 | | | | |
| 31 | R015007000 | CONDUCCION VAHOS COMPLETO | COMPLETE VAPOUR PIPE | 1 | 1 | 1 | 1 | | | | |
| | Z651931000 | TOBERA ACLARADO | RINSE NOZZLE | 2 | 2 | 2 | 2 | | | | |
| | Z651932000 | RODETE | RUNNER | 2 | 2 | 2 | 2 | | | | |
| | Q162030000 | TUERCA EXAGONAL M5 | HEXAGONAL NUT M5 | 2 | 2 | 2 | 2 | | | | |
| | Q242030000 | ARANDELA ABANICO A5 A.304 | FAN WASHER A5 A.304 | 2 | 2 | 2 | 2 | | | | |
| 32 | R345108000 | JUNTA DE VAHOS 5102805 | VAPOUR SEAL 5102805 | 1 | 1 | 1 | 1 | | | | |
| 33 | R015034000 | CUERPO GRIFO VACIADO | DRAINAGE TAP BODY | 1 | 1 | 1 | 1 | | | | |

| MOD. | HORNOS | ZONA | CIRCUITO DE AGUA | PLANO | C-1964 |
|---|---|---|---|---|---|

| ITEM | CODIGO | DENOMINACION | TEXTO | HEM 6/11 | HEP 6/11 | HEM 10/11 | HEP 10/11 | | | | NOTAS |
|---|---|---|---|---|---|---|---|---|---|---|---|
| 34 | R345014000 | MANGUITO GRIFO VACIADO | DRAINAGE TAP HOSE | 1 | 1 | 1 | 1 | | | | |
| 35 | 3715600000 | TUBO SILICONA 26X18 | SILICONE PIPE 26X18 | 1 | 1 | 1 | 1 | | | | |
| | Q881304000 | ABRAZADERA 20-32 | CLAMP 20-32 | 2 | 2 | 2 | 2 | | | | |
| 36 | R665080000 | CODO DESAGÜE | DRAINAGE L-BEND | 1 | 1 | 1 | 1 | | | | |
| 37 | 3715600000 | TUBO SILICONA 26X18 | SILICONE PIPE 26X18 | 1 | 1 | 1 | 1 | | | | |
| | Q881305000 | ABRAZADERA 25-40 | CLAMP 25-40 | 2 | 2 | 2 | 2 | | | | |
| 38 | Q223014000 | CONTRATUERCA 1 LATON | COUNTERNUT 1 BRASS | 1 | 1 | 1 | 1 | | | | |
| 39 | R665076000 | TUBO DESAGÜE COMPLETO | COMPLETE DRAINAGE PIPE | 1 | 1 | 1 | 1 | | | | |
| 40 | R345020000 | TUBO EMPALME | CONNECTION PIPE | 1 | 1 | 1 | 1 | | | | |
| | Q881307000 | ABRAZADERA 40-60 | CLAMP 40-60 | 2 | 2 | 2 | 2 | | | | |
| 41 | R665053000 | TUERCA TAPON 1" | PLUG NUT 1" | 1 | 1 | 1 | 1 | | | | |
| | R015011000 | ARANDELA Ø32 | WASHER Ø32 | 1 | 1 | 1 | 1 | | | | |
| 42 | Q223014000 | CONTRATUERCA 1 LATON | COUNTERNUT 1 BRASS | 1 | 1 | 1 | 1 | | | | |
| 43 | R342803000 | PALANCA GRIFO VACIADO | DRAIN TAP LEVER | 1 | 1 | 1 | 1 | | | | |
| | Q901306000 | GRAPA METALICA DOS PIES | METAL STAPLE TWO FEET | 1 | 1 | 1 | 1 | | | | |
| | Q412002000 | REMACHE AVINOX Ø4x10mm | RIVET AVINOX Ø4x10mm | 2 | 2 | 2 | 2 | | | | |
| 44 | R665070000 | AISLANTE SALIDA GENERADOR611 | GENERATOR OUTPUT INSULATI | 1 | 1 | _ | _ | | | | |
| 44 | T115066000 | AISLANTE CHIMENEA 10-20/11 | FLUE PIPE INSULATION 10-20/11 | _ | _ | 1 | 1 | | | | |
| 45 | R665079000 | CHIMENEA RETORNO COM. 6/11 | FLUE PIPE RETURN COM. 6/11 | 1 | 1 | _ | _ | | | | |
| 45 | R675044000 | CHIMENEA RETORNO COM. 10/11 | FLUE PIPE RETURN COM. 10/11 | _ | _ | 1 | 1 | | | | |
| 46 | R345020000 | TUBO EMPALME | CONNECTION PIPE | 1 | 1 | 1 | 1 | | | | |
| | Q881307000 | ABRAZADERA 40-60 | CLAMP 40-60 | 2 | 2 | 2 | 2 | | | | |
| 47 | N503017000 | SOPORTE TERMOSTATO 1001713 | THERMOSTAT SUPPORT 100171 | 1 | 1 | 1 | 1 | | | | |
| 48 | 3715800000 | TUBO SILICONA Ø43*51 | SILICONE TUBE Ø43*51 | 1 | 1 | 1 | 1 | | | | |
| | Q881307000 | ABRAZADERA 40-60 | CLAMP 40-60 | 2 | 2 | 2 | 2 | | | | |
| 49 | R675019000 | CONJUNTO CHIMENEA HME/M/P | FLUE PIPE UNIT HME/M/P | 1 | 1 | 1 | 1 | | | | |
| 50 | R662813000 | PASAMUROS CHIMENEA 101003361 | FEEDTHROUGH FLUE PIPE 1010 | 1 | 1 | 1 | 1 | | | | |
| 51 | R675008000 | UNION RETENCION VAPORES | STEAM RETAINER UNION | 1 | 1 | 1 | 1 | | | | |
| 52 | R675005000 | GUIA RETENCION VAPORES | STEAM RETAINER GUIDE | 1 | 1 | 1 | 1 | | | | |
| 53 | R675007000 | JUNTA RETENCION VAPORES | STEAM RETAINER SEAL | 1 | 1 | 1 | 1 | | | | |
| 54 | R675006000 | RETENCION DE VAPORES | STEAM RETAINER | 1 | 1 | 1 | 1 | | | | |

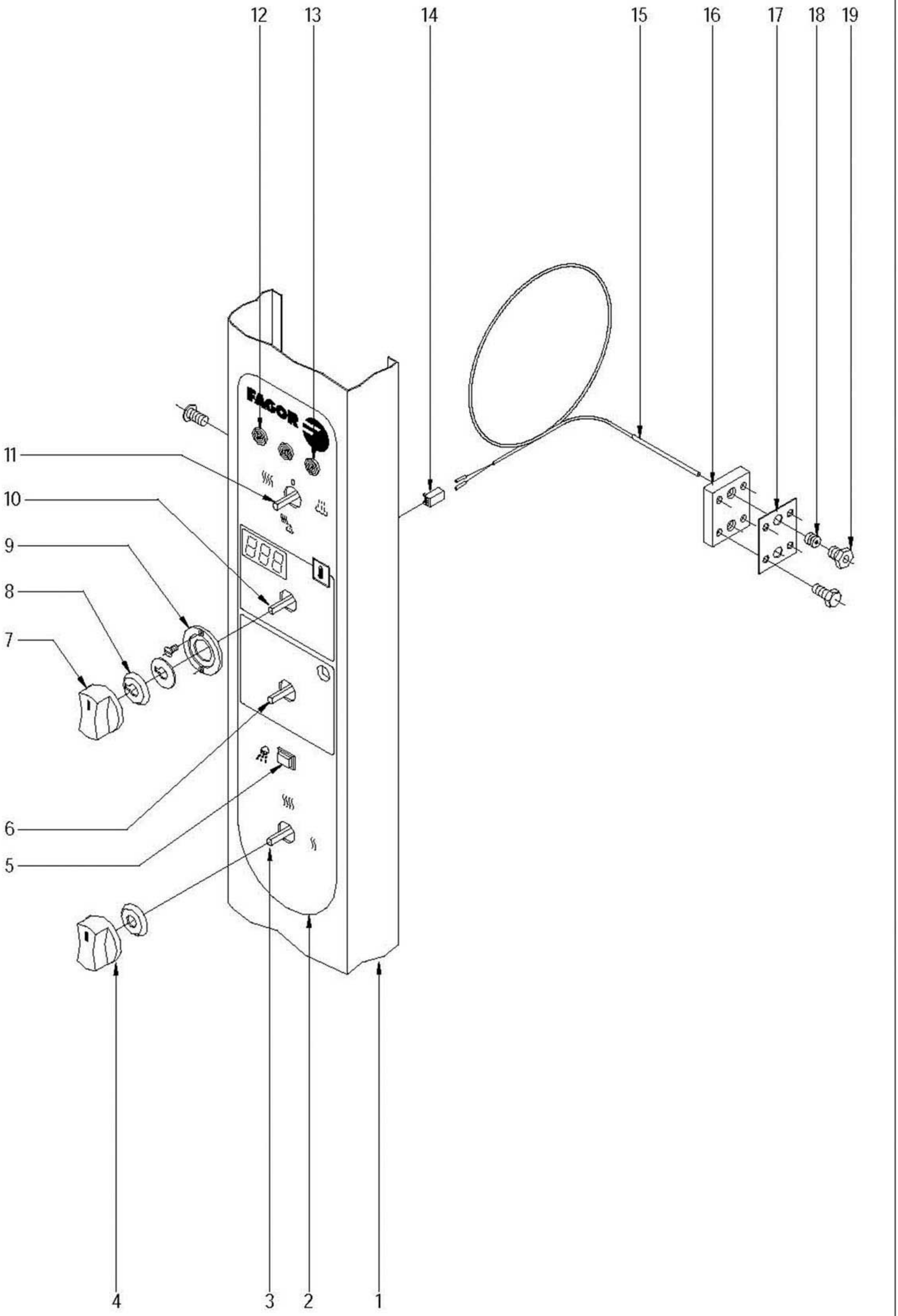


| N plano | Firma | Fecha | Aparato | Lamina | |
|---|---|---|---|---|---|
| C-1965 | | 2008-02 | SISTEMA ELECTRICO PORTAMANDOS<br>HORNOS HEI 6/11-10/11 | 7 | Fagor Industrial S.Coop. FAGOR<br>Onate |

| MOD. | HORNOS | ZONA | PARTE ELECTRICA PORTAMANDOS | PLANO | C-1965 |
|---|---|---|---|---|---|

| ITEM | CODIGO | DENOMINACION | TEXTO | HEI 6/11 | HEI 10/11 | | | | | | NOTAS |
|---|---|---|---|---|---|---|---|---|---|---|---|
| 1 | R692815000 | PORTAMANDOS COMPL. HEI-6/11 | CONTROL HOLDER HEI-6/11 | 1 | _ | | | | | | |
| 1 | R702806000 | PORTAMANDOS COMPL. HEI-10/11 | CONTROL HOLDER HEI-10/11 | _ | 1 | | | | | | |
| | Q152004000 | TORNILLO APLAST. M5X13 A 304 | MUSHROOM HEAD BOLT M5X13 | 3 | 3 | | | | | | |
| | R692806000 | SOPORTE COMPONENTES HMI | COMPONENT SUPPORT HMI | 1 | 1 | | | | | | |
| | R663036000 | FIJACION CIRCUITO | CIRCUIT ATTACHMENT | 4 | 4 | | | | | | |
| | R693011000 | RESISTENCIA 1K8 4W | RESISTOR 1K8 4W | 1 | 1 | | | | | | |
| 2 | R693093000 | SERIGRAFIA HEI-6/11 | SERIGRAPHY HEI-6 / 11 | 1 | _ | | | | | | |
| 2 | R703042000 | SERIGRAFIA HEI-10/11 | SERIGRAPHY HEI-10 / 11 | _ | 1 | | | | | | |
| 3 | R753000000 | CONMUTADOR DE POTENCIA | POWER SWITCH | _ | 1 | | | | | | |
| 4 | R663062000 | BOTÓN DE MANDO COMPLETO | COMPLETE CONTROL BUTTON | 2 | 3 | | | | | | |
| | R663046000 | JUNTA CONMUTADOR | SWITCH SEAL | 2 | 3 | | | | | | |
| 5 | R663032000 | PULSADOR L41M8M959F | BUTTON L41M8M959F | 1 | 1 | | | | | | |
| 6 | R723000000 | TEMPORIZADOR MANUAL | MANUAL TIMER | 1 | 1 | | | | | | |
| 7 | R663063000 | BOTON DE MANDO COMPLETO | COMPLETE CONTROL BUTTON | 1 | 1 | | | | | | |
| 8 | R663045000 | JUNTA POTENCIOMETRO | POTENTIOMETER SEAL | 1 | 1 | | | | | | |
| | R662810000 | ARANDELA GUIA | GUIDE WASHER | 1 | 1 | | | | | | |
| 9 | R662809000 | GUIA BOTON DE MANDO | CONTROL BUTTON GUIDE | 1 | 1 | | | | | | |
| | Q151346000 | TORNILLO AVELLANADO M3x5 | COUNTERSUNK BOLT M3x5 | 2 | 2 | | | | | | |
| 10 | R743013000 | TERMOSTATO ELECTRONICO 270ºC | ELECTRONIC THERMOSTAT 270 | 1 | 1 | | | | | | |
| 11 | R693004000 | CONMUTADOR DE FUNCIONES | FUNCTIONS SWITCH | 1 | 1 | | | | | | |
| 12 | R693056000 | PILOTO AMBAR 41227000A4 | AMBER PILOT 41227000A4 | 2 | 2 | | | | | | |
| 13 | R693055000 | PILOTO VERDE 41227000C7 | GREEN PILOT 41227000C7 | 1 | 1 | | | | | | |
| 14 | R663092000 | CONECTOR 2 VIAS | 2-WAY CONNECTOR | 1 | 1 | | | | | | |
| 15 | R663090000 | CONJUNTO TERMOPAR | THERMOCOUPLE UNIT | 1 | 1 | | | | | | |
| 16 | R662659000 | APOYO RACORD SONDA | PROBE CONNECTION SUPPORT | 1 | 1 | | | | | | |
| 17 | R692811000 | JUNTA PASAMUROS DOBLE | DOUBLE FEEDTHROUGH GASKE | 1 | 1 | | | | | | |
| 18 | R662652000 | BICONO CIERRE SONDA | PROBE CLOSING BICONE | 1 | 1 | | | | | | |
| 19 | R662629000 | RACORD CIERRE SONDA | PROBE CLOSING CONNECTION | 1 | 1 | | | | | | |
| | Q032021000 | TORNILLO ALOMADO M4X10 | CURVED SCREW M4X10 | 4 | 4 | | | | | | |
| | Q232020000 | ARANDELA A-4 | WASHER A-4 | 4 | 4 | | | | | | |
| | | | | | | | | | | | |

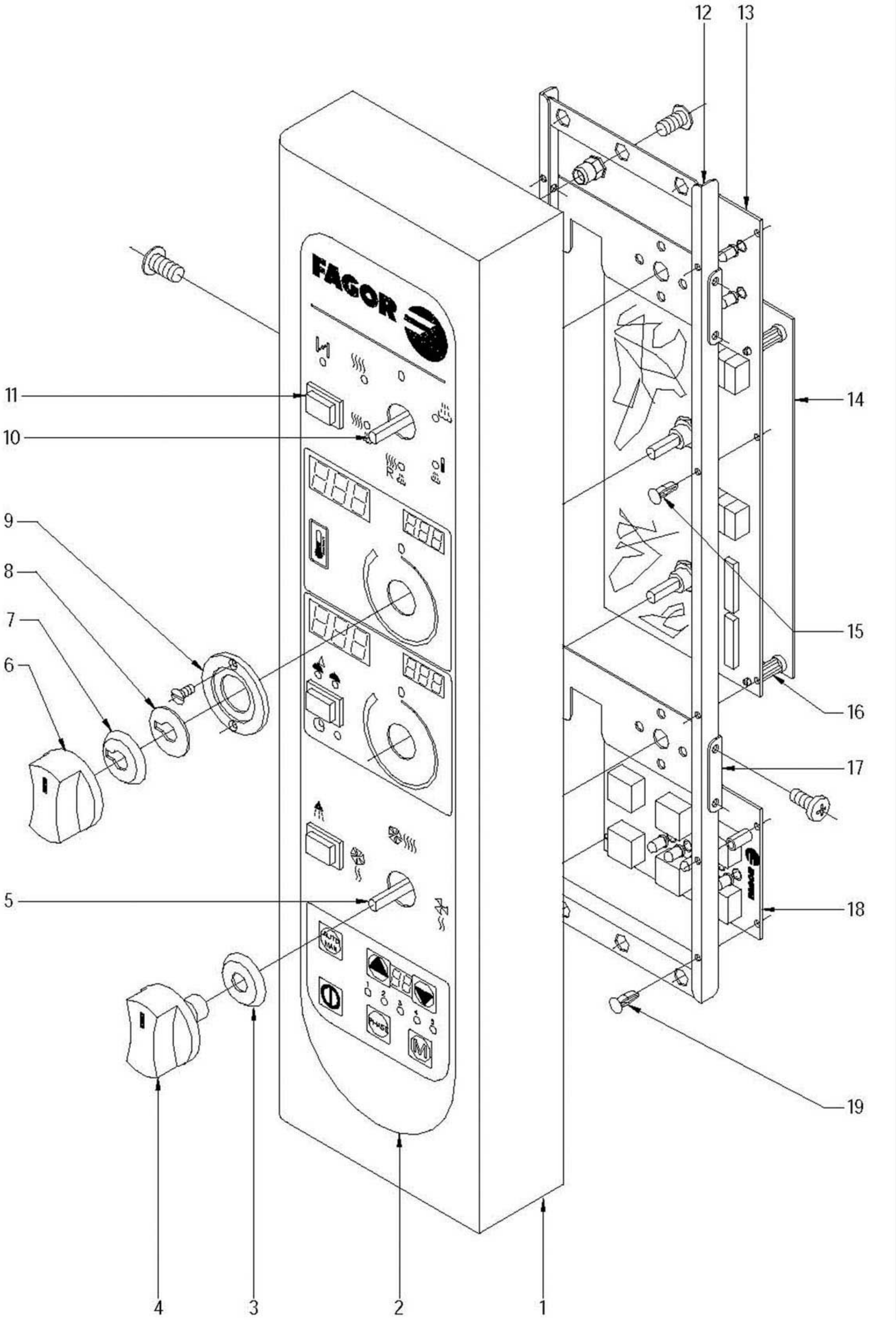


| N plano | Firma | Fecha | Aparato | Lamina | |
|---|---|---|---|---|---|
| C-1966 | | 2008-02 | SISTEMA ELECTRICO PORTAMANDOS<br>HORNOS HEM; HEP 6/11-10/11 | 8 | Fagor Industrial S.Coop.<br>Oñate |

| MOD. | HORNOS | ZONA | PARTE ELECTRICA PORTAMANDOS | PLANO | C-1966 |
|---|---|---|---|---|---|

| ITEM | CODIGO | DENOMINACION | TEXTO | HEM 6/11 | HEP 6/11 | HEM 10/11 | HEP 10/11 | | | | |
|---|---|---|---|---|---|---|---|---|---|---|---|
| 1 | R662831000 | PORTAMANDOS COMPL. HEM-6/11 | COMPL. CONTROL HOLDER HEM | 1 | 1 | _ | _ | | | | |
| 1 | R672831000 | PORTAMANDOS COMP. HEM-10/11 | COMP. CONTROL HOLDER HEM- | _ | _ | 1 | 1 | | | | |
| 2 | R663097000 | SERIGRAFIA HEM-6/11 | SERIGRAPHY HEM-6/11 | 1 | _ | _ | _ | | | | |
| 2 | R663098000 | SERIGRAFIA HEP-6/11 | SERIGRAPHY HEP-6/11 | _ | 1 | _ | _ | | | | |
| 2 | R673067000 | SERIGRAFIA HEM-10/11 20/11 | SERIGRAPHY HEM-10/11 20/11 | _ | _ | 1 | _ | | | | |
| 2 | R673068000 | SERIGRAFIA HEP-10/11 20/11 | SERIGRAPHY HEP-10/11 20/11 | _ | _ | _ | 1 | | | | |
| 3 | R663046000 | JUNTA CONMUTADOR | SWITCH SEAL | 2 | 2 | 2 | 2 | | | | |
| 4 | R663062000 | BOTÓN DE MANDO COMPLETO | COMPLETE CONTROL BUTTON | 2 | 2 | 2 | 2 | | | | |
| 5 | R663026000 | CONMUTADOR FUNC 3P HME/P | FUNCTION SWITCH 3P HME/P | 1 | 1 | 1 | 1 | | | | |
| 6 | R663063000 | BOTÓN DE MANDO COMPLETO | COMPLETE CONTROL BUTTON | 2 | 2 | 2 | 2 | | | | |
| 7 | R663045000 | JUNTA POTENCIOMETRO | POTENTIOMETER SEAL | 2 | 2 | 2 | 2 | | | | |
| 8 | R662810000 | ARANDELA GUIA | GUIDE WASHER | 2 | 2 | 2 | 2 | | | | |
| 9 | R662809000 | GUIA BOTON DE MANDO | CONTROL BUTTON GUIDE | 2 | 2 | 2 | 2 | | | | |
| | Q151346000 | TORNILLO AVELLANADO M3x5 | COUNTERSUNK BOLT M3x5 | 4 | 4 | 4 | 4 | | | | |
| 10 | R663025000 | CONMUTADOR FUNC 6P HME/P | FUNCTION SWITCH 6P HME/P | 1 | 1 | 1 | 1 | | | | |
| 11 | R663032000 | PULSADOR L41M8M959F | BUTTON L41M8M959F | 3 | 3 | 3 | 3 | | | | |
| 12 | R663005000 | SOPORTE CIRCUITO IMPRESO | PRINTED CIRCUIT SUPPORT | 1 | 1 | 1 | 1 | | | | |
| 13 | R663050000 | CIRCUITO IMPRESO MANDO | PRINTED CIRCUIT CONTROL | 1 | 1 | 1 | 1 | | | | |
| 14 | R663085000 | CIRCUITO IMPR. CONTROL PROGR | PRINTED CIRCUIT CONTROL PR | 1 | 1 | 1 | 1 | | | | |
| 15 | R663036000 | FIJACION CIRCUITO | CIRCUIT ATTACHMENT | 6 | 6 | 6 | 6 | | | | |
| 16 | R663035000 | SEPARADOR 19,1 MM. HME/P | SEPARATOR 19.1 MM. HME/P | 4 | 4 | 4 | 4 | | | | |
| 17 | R663008000 | SOPORTE CONMUTADOR | SWITCH SUPPORT | 2 | 2 | 2 | 2 | | | | |
| | Q151320000 | TORN. ALOMADO M4X6 H.ZINCADO | HEXAGONAL CURVED HEAD M4X | 12 | 12 | 12 | 12 | | | | |
| 18 | R663004000 | CIRCUITO IMPRESO PROGRAMA | PRINTED CIRCUIT PROGRAMME | _ | 1 | _ | 1 | | | | |
| 19 | R663036000 | FIJACION CIRCUITO | CIRCUIT ATTACHMENT | _ | 4 | _ | 4 | | | | |
| | | | | | | | | | | | |
| | | | | | | | | | | | |
| | | | | | | | | | | | |
| | | | | | | | | | | | |
| | | | | | | | | | | | |
| | | | | | | | | | | | |

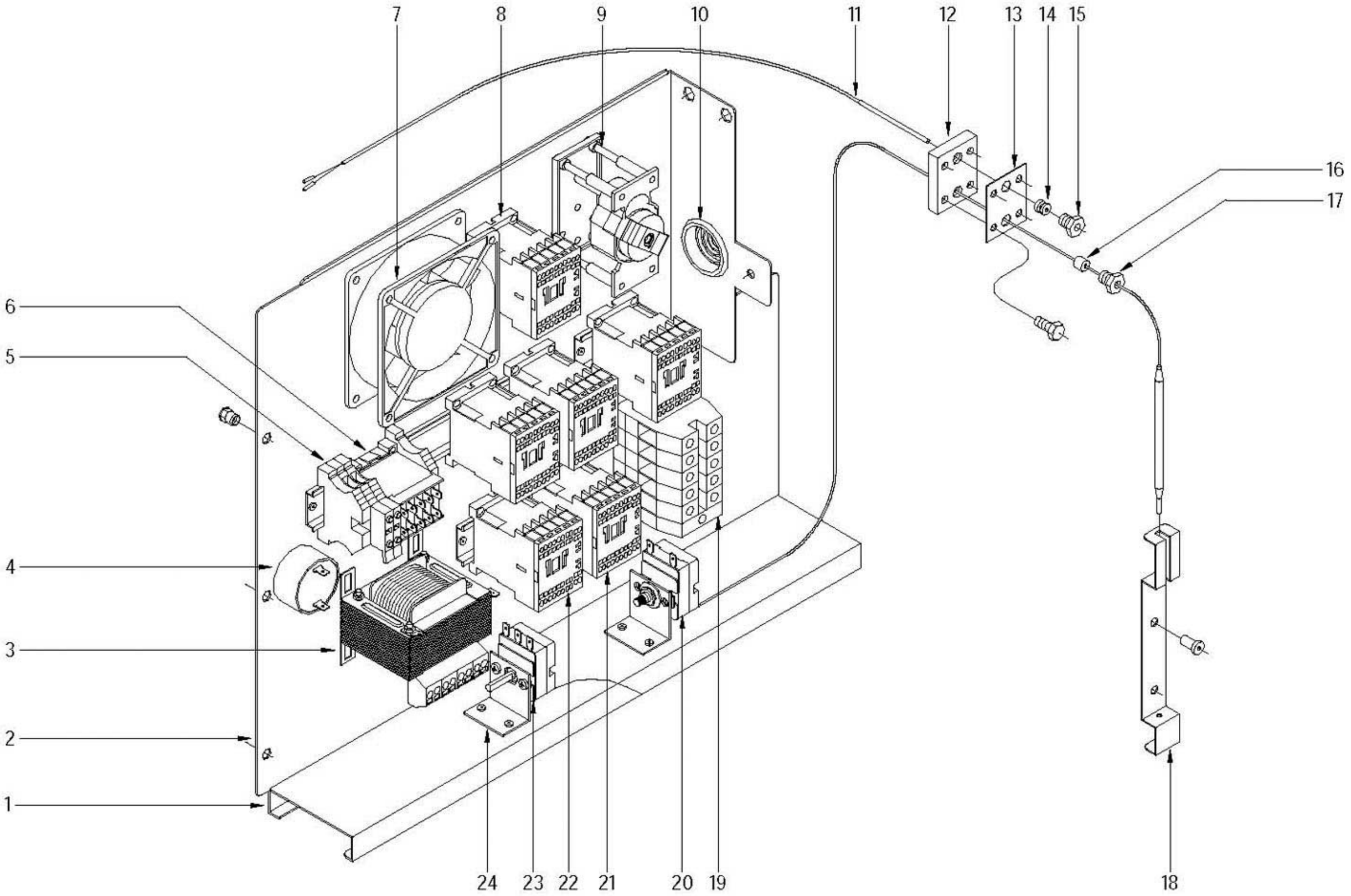


| N plano | Firma | Fecha | Aparato | Lamina | |
|---|---|---|---|---|---|
| C-1967 | | 2008-02 | CUADRO ELECTRICO<br>HORNOS HEI 6/11-10/11 | 9 | Fagor Industrial S.Coop. FAGOR<br>Oñate |

| MOD. | HORNOS | ZONA | CUADRO ELECTRICO | PLANO | C-1967 |
|---|---|---|---|---|---|

| ITEM | CODIGO | DENOMINACION | TEXTO | HEI 6/11 | HEI 10/11 | | | | | | NOTAS |
|---|---|---|---|---|---|---|---|---|---|---|---|
| 1 | R723101000 | CONTRAGUIA CUADRO HCG | SWITCHBOARD COUNTERGUIDE | 1 | 1 | | | | | | |
| | Q412002000 | REMACHE AVINOX Ø4x10MM | RIVET AVINOX Ø4x10MM | 7 | 7 | | | | | | |
| 2 | R663081000 | PANEL CUADRO 6-10-20/11 ELECT | SWITCHBOARD PANEL 6-10-20/1 | 1 | 1 | | | | | | |
| | Q221342000 | REMACHE EXAGONAL M5 | HEXAGONAL RIVET M5 | 3 | 3 | | | | | | |
| 3 | R503005000 | TRANSFORMADOR | TRANSFORMER | 1 | 1 | | | | | | |
| | Q032021000 | TORNILLO ALOMADO M4x10 | CURVED SCREW M4X10 | 4 | 4 | | | | | | |
| | Q162020000 | TUERCA EXAGONAL M4 | HEXAGONAL NUT M4 | 4 | 4 | | | | | | |
| 4 | R693067000 | ZUMBADOR | BUZZER | 1 | 1 | | | | | | |
| 5 | R073005000 | BORNAS PORTA FUSIBLES | FUSE HOLDER TERMINALS | 2 | 2 | | | | | | |
| | P184011000 | CARTUCHO FUSIBLE 4.A | FUSE CARTRIDGE 4.A | 2 | 2 | | | | | | |
| | Z263303000 | TOPE FINAL | END STOP | 3 | 3 | | | | | | |
| 6 | Z683087000 | CONTACTOR 3TF20 01-3AL2 230 | CONTACTOR 3TF20 01-3AL2 230 | 1 | 1 | | | | | | |
| | Z263303000 | TOPE FINAL | END STOP | 1 | 1 | | | | | | |
| 7 | Z103066000 | VENTILADOR 230V.50-60HZ | FAN 230V.50-60HZ | 1 | 1 | | | | | | |
| 8 | Z743009000 | CONTAC. SIRIUS 3RT10 16-2AP02 | CONTACT. SIRIUS 3RT10 16-2AP | 1 | 1 | | | | | | |
| 9 | R763006000 | PROGRAMADOR INVERSION GIRO | INVERT ROTATION PROGRAMME | 1 | 1 | | | | | | |
| | Z123018000 | GUIA CONTACTOR L-55 | CONTACTOR GUIDE L-55 | 1 | 1 | | | | | | |
| 10 | N103013000 | PASA CABLES | CABLE PROTECTOR | 1 | 1 | | | | | | |
| 11 | R663090000 | CONJUNTO TERMOPAR | THERMOCOUPLE UNIT | 1 | 1 | | | | | | |
| 12 | R662659000 | APOYO RACORD SONDA | PROBE CONNECTION SUPPORT | 1 | 1 | | | | | | |
| 13 | R692811000 | JUNTA PASAMUROS DOBLE | DOUBLE FEEDTHROUGH GASKE | 1 | 1 | | | | | | |
| 14 | R662652000 | BICONO CIERRE SONDA | PROBE CLOSING BICONE | 1 | 1 | | | | | | |
| 15 | R662629000 | RACORD CIERRE SONDA | PROBE CLOSING CONNECTION | 1 | 1 | | | | | | |
| | Q032021000 | TORNILLO ALOMADO M4X10 | CURVED SCREW M4X10 | 4 | 4 | | | | | | |
| | Q232020000 | ARANDELA A-4 | WASHER A-4 | 4 | 4 | | | | | | |
| 16 | R662662000 | JUNTA CIERRE BULBO LIMITADOR | BULB LIMITER CLOSING SEAL | 1 | 1 | | | | | | |
| 17 | R662629000 | RACORD CIERRE SONDA | PROBE CLOSING CONNECTION | 1 | 1 | | | | | | |
| | Q412002000 | REMACHE AVINOX Ø4x10MM | RIVET AVINOX Ø4x10MM | 4 | 4 | | | | | | |
| 18 | R662683000 | SOPORTE BULBO | BULB SUPPORT | 1 | 1 | | | | | | |
| | Q412002000 | REMACHE AVINOX Ø4x10MM | RIVET AVINOX Ø4x10MM | 2 | 2 | | | | | | |
| | | | | | | | | | | | |

| MOD. | HORNOS | ZONA | CUADRO ELECTRICO | PLANO | C-1967 |
|---|---|---|---|---|---|

| ITEM | CODIGO | DENOMINACION | TEXTO | HEI 6/11 | HEI 10/11 | | | | | | NOTAS |
|---|---|---|---|---|---|---|---|---|---|---|---|
| 19 | P453025000 | BORNES 10 WDU-10203.O | TERMINALS 10 WDU-10203.O | 3 | _ | | | | | | |
| 19 | R263003000 | BORNA PASO 35MM | THROUGH TERMINAL 35MM | _ | 3 | | | | | | |
| | Z263302000 | BORNA DE PASO AZUL | BLUE THROUGH TERMINAL | 1 | _ | | | | | | |
| | R673010000 | BORNA PASO AZUL 35MM | THROUGH TERMINAL BLUE 35M | _ | 1 | | | | | | |
| | P453026000 | BORNE TIER 10 WPE-10103.O | TERMINAL TIER 10 WPE-10103.O | 1 | _ | | | | | | |
| | Z103035000 | BORNA TIERRA 35MM | EARTH TERMINAL 35MM | _ | 1 | | | | | | |
| | Z683096000 | TOPE FINAL WEW35 10590.0 | END STOP WEW35 10590.0 | _ | 1 | | | | | | |
| | Z683068000 | SEÑALIZ.DEK-6WEIDMULLER | SIGNS DEK-6WEIDMULLER | 1 | 1 | | | | | | |
| | R663055000 | GUIA CONTACTOR L-120 | CONTACTOR GUIDE L-120 | 1 | 1 | | | | | | |
| 20 | R243016000 | LIMITADOR TEMPERATURA | TEMPERATURE LIMITER | 1 | 1 | | | | | | |
| 21 | Z203050000 | CONTACTOR SIRIUS 3R 230V.50-60 | SIRIUS CONTACTOR 3R 230V.50- | 2 | 4 | | | | | | |
| | R693009000 | GUIA CONTACTOR L-250 | CONTACTOR GUIDE L-250 | 1 | 1 | | | | | | |
| 22 | Z743009000 | CONTAC. SIRIUS 3RT10 16-2AP02 | CONTACT. SIRIUS 3RT10 16-2AP | 1 | 1 | | | | | | |
| | Z403016000 | GUIA CONTACTOR L-100 | CONTACTOR GUIDE L-100 | 1 | 1 | | | | | | |
| 23 | R343018000 | TERMOSTATO VAPOR | STEAM THERMOSTAT | 1 | 1 | | | | | | |
| 24 | R343039000 | SOPORTE TERMOS VAPOR | STEAM THERMOSTAT SUPPORT | 2 | 2 | | | | | | |
| | Q412002000 | REMACHE AVINOX Ø4x10MM | RIVET AVINOX Ø4x10MM | 4 | 4 | | | | | | |

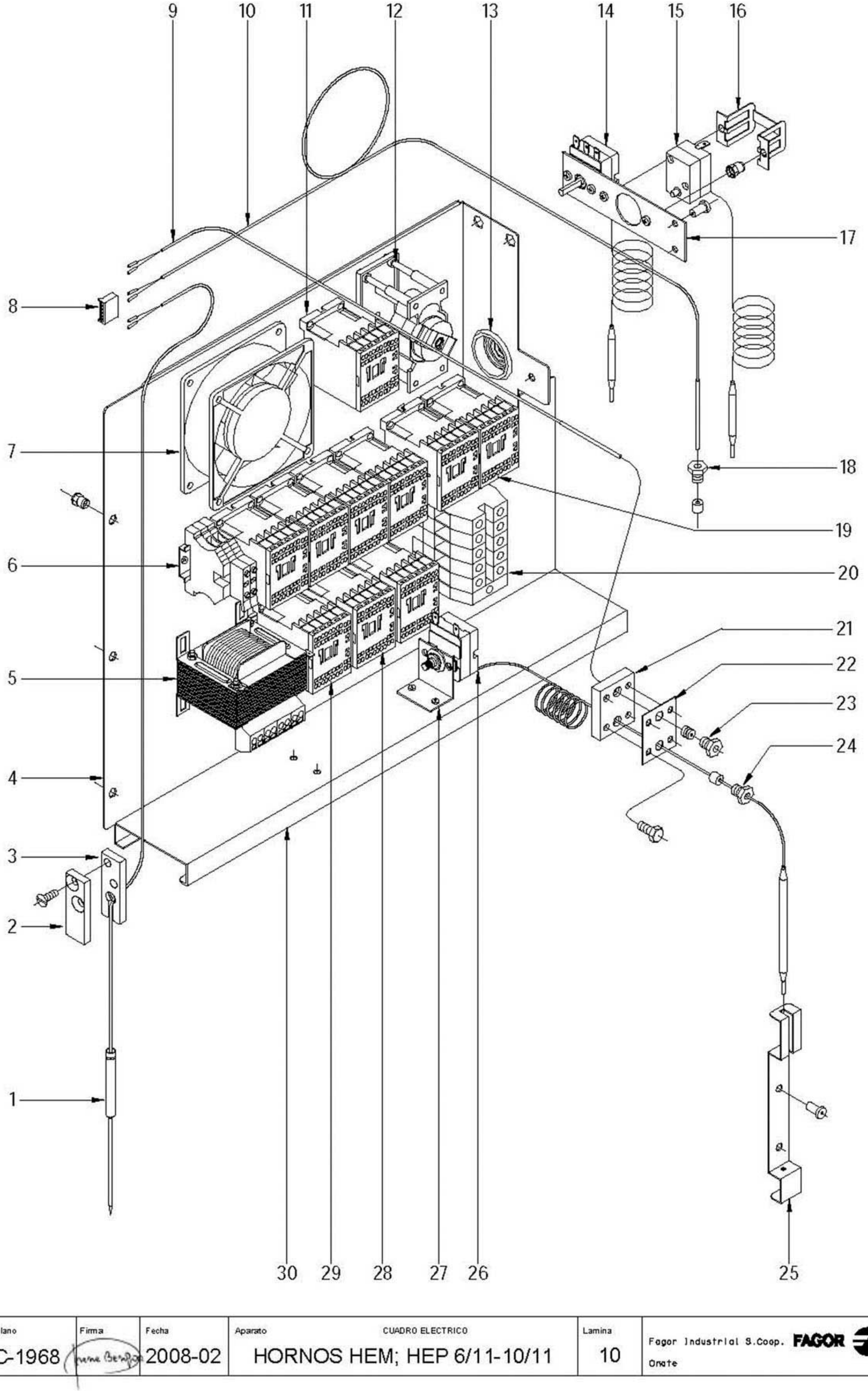


| N plano | Firma | Fecha | Aparato | Lamina | |
|---|---|---|---|---|---|
| C-1968 | | 2008-02 | CUADRO ELECTRICO<br>HORNOS HEM; HEP 6/11-10/11 | 10 | Fagor Industrial S.Coop. FAGOR<br>Onate |

| MOD. | HORNOS | ZONA | CUADRO ELECTRICO | PLANO | C-1968 |
|---|---|---|---|---|---|

| ITEM | CODIGO | DENOMINACION | TEXTO | HEM 6/11 | HEP 6/11 | HEM 10/11 | HEP 10/11 | | | | NOTAS |
|---|---|---|---|---|---|---|---|---|---|---|---|
| 1 | R673076000 | CONJUNTO SONDA NUCLEO J XX/1 | CORE PROBE UNIT J XX/11 | 1 | 1 | 1 | 1 | | | | |
| | Q221341000 | REMACHE EXAGONAL M4 | HEXAGONAL RIVET M4 | 2 | 2 | 2 | 2 | | | | |
| | Q042022000 | TORNILLO AVELLANADO M4X15 | COUNTERSUNK BOLT M4x15 | 2 | 2 | 2 | 2 | | | | |
| 2 | T133037000 | TAPA SUJECION SONDA | PROBE ATTACHMENT COVER | 1 | 1 | 1 | 1 | | | | |
| 3 | T133036000 | BASE SUJECION SONDA | PROBE ATTACHMENT BASE | 1 | 1 | 1 | 1 | | | | |
| 4 | R663081000 | PANEL CUADRO 6-10-20/11 ELECT | SWITCHBOARD PANEL 6-10-20/1 | 1 | 1 | 1 | 1 | | | | |
| | Q221342000 | REMACHE EXAGONAL M5 | HEXAGONAL RIVET M5 | 3 | 3 | 3 | 3 | | | | |
| 5 | R503005000 | TRANSFORMADOR | TRANSFORMER | 1 | 1 | 1 | 1 | | | | |
| | Q032021000 | TORNILLO ALOMADO M4x10 | CURVED SCREW M4X10 | 4 | 4 | 4 | 4 | | | | |
| | Q162020000 | TUERCA EXAGONAL M4 | HEXAGONAL NUT M4 | 4 | 4 | 4 | 4 | | | | |
| 6 | R073005000 | BORNAS PORTA FUSIBLES | FUSE HOLDER TERMINALS | 2 | 2 | 2 | 2 | | | | |
| | P184011000 | CARTUCHO FUSIBLE 4.A | FUSE CARTRIDGE 4.A | 2 | 2 | 2 | 2 | | | | |
| | Z263303000 | TOPE FINAL | END STOP | 2 | 2 | 2 | 2 | | | | |
| 7 | Z103066000 | VENTILADOR 230V.50-60HZ | FAN 230V.50-60HZ | 1 | 1 | 1 | 1 | | | | |
| | Q032021000 | TORNILLO ALOMADO M4X10 | CURVED SCREW M4X10 | 4 | 4 | 4 | 4 | | | | |
| | Q232020000 | ARANDELA A-4 | WASHER A-4 | 4 | 4 | 4 | 4 | | | | |
| | Q162020000 | TUERCA EXAGONAL M4 | HEXAGONAL NUT M4 | 4 | 4 | 4 | 4 | | | | |
| 8 | R663093000 | CONECTOR 6 VIAS | 6-WAY CONNECTOR | 1 | 1 | 1 | 1 | | | | |
| 9 | R663090000 | CONJUNTO TERMOPAR | THERMOCOUPLE UNIT | 1 | 1 | 1 | 1 | | | | |
| 10 | R663089000 | CONJ, TERMOPAR VAPOR HME/P | STEAM THERMOCOUPLE UNIT H | 1 | 1 | 1 | 1 | | | | |
| 11 | Z743009000 | CONTACT. SIRIUS 3RT10 16-2AP02 | CONTACT. SIRIUS 3RT10 16-2AP | 1 | 1 | 1 | 1 | | | | |
| 12 | R763006000 | PROGRAMADOR INVERSION GIRO | INVERT ROTATION PROGRAMME | 1 | 1 | 1 | 1 | | | | |
| | Z123018000 | GUIA CONTACTOR L-55 | CONTACTOR GUIDE L-55 | 1 | 1 | 1 | 1 | | | | |
| 13 | N103013000 | PASA CABLES | CABLE PROTECTOR | 1 | 1 | 1 | 1 | | | | |
| 14 | R343100000 | TERMOSTATO CONDUC. VAPOR | THERMOSTAT STEAM PIPE | 1 | 1 | 1 | 1 | | | | |
| 15 | Z213014000 | LIMITADOR TECASA P. | LIMITER TECASA P. | 1 | 1 | 1 | 1 | | | | |
| 16 | Z203060000 | AMARRE LIMITADOR TECASA | LIMITER FASTENING TECASA | 1 | 1 | 1 | 1 | | | | |
| | Q221341000 | REMACHE EXAGONAL M4 | HEXAGONAL RIVET M4 | 2 | 2 | 2 | 2 | | | | |
| 17 | R673077000 | SOPORTE AMARRE TERMOSTATOS | THERMOSTAT ATTACHMENT SUI | 1 | 1 | 1 | 1 | | | | |
| | Q412002000 | REMACHE AVINOX Ø4x10MM | RIVET AVINOX Ø4x10MM | 2 | 2 | 2 | 2 | | | | |
| | | | | | | | | | | | |

| MOD. | HORNOS | ZONA | CUADRO ELECTRICO | PLANO | C-1968 |
|---|---|---|---|---|---|

| ITEM | CODIGO | DENOMINACION | TEXTO | HEM 6/11 | HEP 6/11 | HEM 10/11 | HEP 10/11 | | | | NOTAS |
|---|---|---|---|---|---|---|---|---|---|---|---|
| 18 | R662629000 | RACORD CIERRE SONDA | PROBE CLOSING CONNECTION | 1 | 1 | 1 | 1 | | | | |
| | 3712400000 | TUBO SILICONA NEGRO Ø 8*3 | BLACK SILICONE PIPE Ø 8*3 | 1 | 1 | 1 | 1 | | | | |
| 19 | Z203050000 | CONTACTOR SIRIUS 3R 230V.50-60 | SIRIUS CONTACTOR 3R 230V.50- | 4 | 4 | 6 | 6 | | | | |
| | R693009000 | GUIA CONTACTOR L-250 | CONTACTOR GUIDE L-250 | 1 | 1 | 1 | 1 | | | | |
| 20 | P453025000 | BORNES 10 WDU-10203.O | TERMINALS 10 WDU-10203.O | 3 | 3 | _ | _ | | | | |
| 20 | R263003000 | BORNA PASO 35MM | THROUGH TERMINAL 35MM | _ | _ | 3 | 3 | | | | |
| | Z263302000 | BORNA DE PASO AZUL | BLUE THROUGH TERMINAL | 1 | 1 | _ | _ | | | | |
| | R673010000 | BORNA PASO AZUL 35MM | THROUGH TERMINAL BLUE 35M | _ | _ | 1 | 1 | | | | |
| | P453026000 | BORNE TIER 10 WPE-10103.O | TERMINAL TIER 10 WPE-10103.O | 1 | 1 | _ | _ | | | | |
| | Z103035000 | BORNA TIERRA 35MM | EARTH TERMINAL 35MM | _ | _ | 1 | 1 | | | | |
| | Z683096000 | TOPE FINAL WEW35 10590.0 | END STOP WEW35 10590.0 | _ | _ | 1 | 1 | | | | |
| | Z683068000 | SEÑALIZ.DEK-6WEIDMULLER | SIGNS DEK-6WEIDMULLER | 1 | 1 | 1 | 1 | | | | |
| | R663055000 | GUIA CONTACTOR L-120 | CONTACTOR GUIDE L-120 | 1 | 1 | 1 | 1 | | | | |
| 21 | R662659000 | APOYO RACORD SONDA | PROBE CONNECTION SUPPORT | 1 | 1 | 1 | 1 | | | | |
| 22 | R692811000 | JUNTA PASAMUROS DOBLE | DOUBLE FEEDTHROUGH GASKE | 1 | 1 | 1 | 1 | | | | |
| 23 | R662629000 | RACORD CIERRE SONDA | PROBE CLOSING CONNECTION | 1 | 1 | 1 | 1 | | | | |
| | R662652000 | BICONO CIERRE SONDA | PROBE CLOSING BICONE | 1 | 1 | 1 | 1 | | | | |
| 24 | R662629000 | RACORD CIERRE SONDA | PROBE CLOSING CONNECTION | 1 | 1 | 1 | 1 | | | | |
| | R662662000 | JUNTA CIERRE BULBO LIMITADOR | BULB LIMITER CLOSING SEAL | 1 | 1 | 1 | 1 | | | | |
| | Q012021000 | TORNILLO EXAGONAL M4x10 A304 | HEXAGONAL BOLT M4x10 A304 | 4 | 4 | 4 | 4 | | | | |
| 25 | R662683000 | SOPORTE BULBO | BULB SUPPORT | 1 | 1 | 1 | 1 | | | | |
| | Q412002000 | REMACHE AVINOX Ø4x10MM | RIVET AVINOX Ø4x10MM | 4 | 4 | 4 | 4 | | | | |
| 26 | R243016000 | LIMITADOR TEMPERATURA | TEMPERATURE LIMITER | 1 | 1 | 1 | 1 | | | | |
| 27 | R343039000 | SOPORTE TERMOS VAPOR | STEAM THERMOSTAT SUPPORT | 1 | 1 | 1 | 1 | | | | |
| | Q412002000 | REMACHE AVINOX Ø4x10MM | RIVET AVINOX Ø4x10MM | 2 | 2 | 2 | 2 | | | | |
| 28 | Z203050000 | CONTACTOR SIRIUS 3R 230V.50-60 | SIRIUS CONTACTOR 3R 230V.50- | _ | _ | 2 | 2 | | | | |
| | Z103084000 | GUIA CONTACTOR L-138 " | CONTACTOR GUIDE L-138 " | 1 | 1 | 1 | 1 | | | | |
| 29 | Z743009000 | CONT.SIRIUS 3RT10 16-2AP02 | SIRIUS CONT. 3RT10 16-2AP02 | 1 | 1 | 1 | 1 | | | | |
| 30 | R723101000 | CONTRAGUIA CUADRO HCG | SWITCHBOARD COUNTERGUIDE | 1 | 1 | 1 | 1 | | | | |
| | Q412002000 | REMACHE AVINOX Ø4x10MM | RIVET AVINOX Ø4x10MM | 7 | 7 | 7 | 7 | | | | |
| | | | | | | | | | | | |

| MOD. | HORNOS | ZONA | VARIOS | PLANO | |
|---|---|---|---|---|---|

| ITEM | CODIGO | DENOMINACION | TEXTO | HEI 6/11 | HEM 6/11 | HEP 6/11 | HEI 10/11 | HEM 10/11 | HEP 10/11 | | |
|---|---|---|---|---|---|---|---|---|---|---|---|
| | R696501000 | FOLLETO INSTRUCCIONES HMI | INSTRUCTION LEAFLET HMI | 1 | _ | _ | 1 | _ | _ | | |
| | R666501000 | FOLLETO DE INSTRUC. HME/HMP | INSTRUCTION LEAFLET HME/HM | _ | 1 | 1 | _ | 1 | 1 | | |
| | R693018000 | ESQUEMA TEORICO HEI 6/11 | THEORETICAL DIAGRAM HEI 6/1 | 1 | _ | _ | _ | _ | _ | | PLANO HC-78371 |
| | R663001000 | ESQUEMA TEORICO HEM6/11 | THEORETICAL DIAGRAM HEM6/1 | _ | 1 | 1 | _ | _ | _ | | PLANO HC-78304 |
| | R703041000 | ESQUEMA TEORICO HEI 10/11 | THEORETICAL DIAGRAM HEI 10/ | | _ | _ | 1 | _ | _ | | PLANO HC-76614 |
| | R673074000 | ESQUEMA TEORICO HEM/P 10/11 | THEORETICAL DIAGRAM HEM/P | _ | _ | _ | _ | 1 | 1 | | PLANO HC-78178 |
| | R693070000 | ESQUEMA DE MONTAJE HMI-6-11 | ASSEMBLY DIAGRAM HMI-6-11 | 1 | _ | _ | _ | _ | _ | | PLANO HC-73225 |
| | R663082000 | ESQUEMA MONTAJE HME/P-6-11 | ASSEMBLY DIAGRAM HME/P -6/- | _ | 1 | 1 | _ | _ | _ | | PLANO HD-12680 |
| | R703016000 | ESQUEMA DE MONTAJE HMI | ASSEMBLY DIAGRAM HMI | _ | _ | _ | 1 | _ | _ | | PLANO HC-73224 |
| | R143018000 | ESQUEMA DE MONTAJE HEM/HEP | ASSEMBLY DIAGRAM HEM/HEP | _ | _ | _ | _ | 1 | 1 | | PLANO HD-12681 |
| | | | | | | | | | | | |
| | | | | | | | | | | | |
| | R693089000 | INSTALACION ELECTRICA HMI | ELECTRICAL INSTALLATION HMI | 1 | _ | _ | 1 | _ | _ | | |
| | R143017000 | INSTALACION ELECTR. HME/HMP | ELEC. INSTALLATION HME/HMP | _ | 1 | 1 | _ | 1 | 1 | | |
| | R693066000 | CABLEADO FUERZA E-P-I-M 6/11 | POWER CABLES E-P-I-M 6/11 | 1 | 1 | 1 | _ | _ | _ | | |
| | R143005000 | CABLEADO FUERZA CONVECCION | WIRING TO CONVECTION | _ | _ | _ | 1 | 1 | 1 | | |
| | R693065000 | CABLEADO FUERZA HMI 6/11 | WIRING HMI 6/11 | 1 | _ | _ | _ | _ | _ | | |
| | R663074000 | CABLEADO FUERZA E-M-P 6/11 | POWER CABLES E-M-P 6/11 | _ | 1 | 1 | _ | _ | _ | | |
| | R703013000 | CABLEADO FUERZA HMI 10/11 | WIRING HMI 10/11 | _ | _ | _ | 1 | _ | _ | | |
| | R673013000 | CABLEADO FUERZA CUADRO ELE. | WIRING TO SWITCHBOARD | _ | _ | _ | _ | 1 | 1 | | |
| | R663075000 | CABLE. FUERZA VAPOR E-M-P 6/11 | CABLE. STEAM POWER E-M-P 6/ | _ | 1 | 1 | _ | _ | _ | | |
| | R143004000 | CABLEADO FUERZA VAPOR | WIRING TO STEAM | _ | _ | _ | _ | 1 | 1 | | |
| | R093024000 | CABLEADO LUZ INTERIOR | INTERIOR LIGHT WIRING | 1 | 1 | 1 | 1 | 1 | 1 | | |
| | R763007000 | CABLEADO INVERSION GIRO E | WIRING INVERT ROTATION E | 1 | 1 | 1 | 1 | 1 | 1 | | |
| | R763011000 | MONTAJE INVERSION GIRO HMM | ASSEMBLY INVERT ROTATION H | 1 | 1 | 1 | 1 | 1 | 1 | | |
| | R143009000 | INSTALACION DOBLE POTENCIA | DOUBLE POWER INSTALLATION | _ | _ | _ | _ | 1 | 1 | | |
| | R663041000 | CONEXION CONTROL PROGRAMA | CONNECTION PROGRAMME CO | _ | _ | 1 | _ | _ | 1 | | |
| | | | | | | | | | | | |
| | | | | | | | | | | | |
| | | | | | | | | | | | |
| | | | | | | | | | | | |

| MOD. | HORNOS | ZONA | CAMBIOS PARA PASAR DE (380-415V. 50Hz) A (220V. 50Hz) | PLANO | C-1962 |
|---|---|---|---|---|---|

| ITEM | CODIGO | DENOMINACION | TEXTO | HEI 6/11 | HEM 6/11 | HEP 6/11 | HEI 10/11 | HEM 10/11 | HEP 10/11 | | |
|---|---|---|---|---|---|---|---|---|---|---|---|
| | | PIEZAS A ELIMINAR | PARTS TO BE REMOVED | | | | | | | | |
| 9 | T493003000 | MOTOR 20/21 2V 400V | MOTOR 20/21 2V 400V. | _ | 1 | 1 | _ | 1 | 1 | | |
| | | PIEZAS A INTRODUCIR | PARTS TO BE INCLUDED | | | | | | | | |
| 9 | T493004000 | MOTOR 20/21 2V 230V. | MOTOR 20/21 2V 230V. | _ | 1 | 1 | _ | 1 | 1 | | |

| MOD. | HORNOS | ZONA | CAMBIOS PARA PASAR DE (380-415V. 50Hz) A (380-415V. 60Hz) | PLANO | C-1961 |
|---|---|---|---|---|---|

| ITEM | CODIGO | DENOMINACION | TEXTO | HEI 6/11 | HEM 6/11 | HEP 6/11 | HEI 10/11 | HEM 10/11 | HEP 10/11 | | |
|---|---|---|---|---|---|---|---|---|---|---|---|
| | | PIEZAS A INTRODUCIR | PARTS TO BE INCLUDED | | | | | | | | |
| S/Nº | T322607000 | REDUCC. CUBREVENT. 60HzD160 | FANCOVER REDUC. 60HzD160 | 1 | 1 | 1 | 1 | 1 | 1 | | |

| MOD. | HORNOS | ZONA | CAMBIOS PARA PASAR DE (380-415V. 50Hz) A (220V. 60Hz) | PLANO | |
|---|---|---|---|---|---|

| ITEM | CODIGO | DENOMINACION | TEXTO | HEI 6/11 | HEM 6/11 | HEP 6/11 | HEI 10/11 | HEM 10/11 | HEP 10/11 | | |
|---|---|---|---|---|---|---|---|---|---|---|---|
| | | PIEZAS A ELIMINAR | PARTS TO BE REMOVED | | | | | | | | |
| 9 | T493003000 | MOTOR 20/21 2V 400V | MOTOR 20/21 2V 400V. | _ | 1 | 1 | _ | 1 | 1 | | PLANO C-1962 |
| | | | | | | | | | | | |
| | | | | | | | | | | | |
| | | | | | | | | | | | |
| | | | | | | | | | | | |
| | | | | | | | | | | | |
| | | | | | | | | | | | |
| | | | | | | | | | | | |
| | | | | | | | | | | | |
| | | | | | | | | | | | |
| | | | | | | | | | | | |
| | | | | | | | | | | | |
| | | | | | | | | | | | |
| | | PIEZAS A INTRODUCIR | PARTS TO BE INCLUDED | | | | | | | | |
| S/Nº | T322607000 | REDUCC. CUBREVENT. 60HzD160 | FANCOVER REDUC. 60HzD160 | 1 | 1 | 1 | 1 | 1 | 1 | | PLANO C-1961 |
| 9 | T493004000 | MOTOR 20/21 2V 230V. | MOTOR 20/21 2V 230V. | _ | 1 | 1 | _ | 1 | 1 | | PLANO C-1962 |
| | | | | | | | | | | | |
| | | | | | | | | | | | |
| | | | | | | | | | | | |
| | | | | | | | | | | | |
| | | | | | | | | | | | |
| | | | | | | | | | | | |
| | | | | | | | | | | | |
| | | | | | | | | | | | |
| | | | | | | | | | | | |
| | | | | | | | | | | | |
| | | | | | | | | | | | |
| | | | | | | | | | | | |
| | | | | | | | | | | | |
| | | | | | | | | | | | |

| MOD. | HORNOS | ZONA | CAMBIOS PARA PASAR DE (380-415V. 50Hz) A (200V. 3. 60Hz JAPON) | PLANO | |
|---|---|---|---|---|---|

| ITEM | CODIGO | DENOMINACION | TEXTO | HEP 6/11 | HEP 10/11 | | | | | | |
|---|---|---|---|---|---|---|---|---|---|---|---|
| | | PIEZAS A ELIMINAR | PARTS TO BE REMOVED | | | | | | | | |
| 5 | R663016000 | RESISTENCIA CONVECCION 230V. | CONVECTION RESISTOR 230V. | 6 | _ | | | | | | PLANO C-1962 |
| 5 | R673002000 | RESISTENCIA CONVECCION | CONVECTION RESISTOR | _ | 6 | | | | | | PLANO C-1962 |
| 9 | T493003000 | MOTOR 20/21 2V 400V | MOTOR 20/21 2V 400V. | 1 | 1 | | | | | | PLANO C-1962 |
| | | | | | | | | | | | |
| | | | | | | | | | | | |
| | | | | | | | | | | | |
| | | | | | | | | | | | |
| | | | | | | | | | | | |
| | | | | | | | | | | | |
| | | | | | | | | | | | |
| | | | | | | | | | | | |
| | | | | | | | | | | | |
| | | PIEZAS A INTRODUCIR | PARTS TO BE INCLUDED | | | | | | | | |
| S/Nº | T322607000 | REDUCC. CUBREVENT. 60HzD160 | FANCOVER REDUC. 60HzD160 | 1 | 1 | | | | | | PLANO C-1961 |
| 5 | R663002000 | RESISTENCIA 2KW HEM 6-11 CAM. | RESISTOR 2KW HEM 6-11 CAM. | 6 | _ | | | | | | PLANO C-1962 |
| 5 | R683000000 | RESISTENCIA CONV. 230V | CONV. RESISTOR 230V | _ | 6 | | | | | | PLANO C-1962 |
| 9 | T493004000 | MOTOR 20/21 2V 230V. | MOTOR 20/21 2V 230V. | 1 | 1 | | | | | | PLANO C-1962 |
| S/Nº | R673078000 | TRANSFORMADOR 200/230V 200VA | TRANSFORMER 200/230V 200VA | 1 | 1 | | | | | | |
| | R693091000 | PLANO DE MONTAJE | ASSEMBLY PLAN | 1 | 1 | | | | | | PLANO HB-72194 |
| | R763003000 | CABLEADO TRANSFORMADOR | TRANSFORMER WIRING | 1 | 1 | | | | | | |
| | | | | | | | | | | | |
| | | | | | | | | | | | |
| | | | | | | | | | | | |
| | | | | | | | | | | | |
| | | | | | | | | | | | |
| | | | | | | | | | | | |
| | | | | | | | | | | | |
| | | | | | | | | | | | |
| | | | | | | | | | | | |
| | | | | | | | | | | | |
| | | | | | | | | | | | |

| MOD. | HORNOS | ZONA | PIEZAS ESPECIFICAS PARA VAUBAN | PLANO | C-1959 |
|---|---|---|---|---|---|

| ITEM | CODIGO | DENOMINACION | TEXTO | VEI-6/11 | VECE-6/11 | VECP-6/11 | VEI-10/11 | VECE-10/11 | VECP-10/11 | | |
|---|---|---|---|---|---|---|---|---|---|---|---|
| | | PIEZAS A ELIMINAR | PARTS TO BE REMOVED | | | | | | | | |
| 8 | R693093000 | SERIGRAFIA HEI-6/11 | SERIGRAPHY HEI-6 / 11 | 1 | _ | _ | _ | _ | _ | | |
| | R696501000 | FOLLETO INSTRUCCIONES HMI | INSTRUCTION LEAFLET HMI | 1 | _ | _ | 1 | _ | _ | | |
| 8 | R663097000 | SERIGRAFIA HEM-6/11 | SERIGRAPHY HEM-6/11 | _ | 1 | _ | _ | _ | _ | | |
| 8 | R663098000 | SERIGRAFIA HEP-6/11 | SERIGRAPHY HEP-6/11 | _ | _ | 1 | _ | _ | _ | | |
| 8 | R703042000 | SERIGRAFIA HEI-10/11 | SERIGRAPHY HEI-10 / 11 | _ | _ | _ | 1 | _ | _ | | |
| 8 | R673067000 | SERIGRAFIA HEM-10/11 20/11 | SERIGRAPHY HEM-10/11 20/11 | _ | _ | _ | _ | 1 | _ | | |
| 8 | R673068000 | SERIGRAFIA HEP-10/11 20/11 | SERIGRAPHY HEP-10/11 20/11 | _ | _ | _ | _ | _ | 1 | | |
| | | | | | | | | | | | |
| | | | | | | | | | | | |
| | | | | | | | | | | | |
| | | | | | | | | | | | |
| | | | | | | | | | | | |
| | | PIEZAS A INTRODUCIR | PARTS TO BE INCLUDED | | | | | | | | |
| 8 | R693094000 | SERIGRAFIA VAUBAN VEI-6/11 | SERIGRAPHY VAUBAN VEI-6/11 | 1 | _ | _ | _ | _ | _ | | |
| | R696520000 | FOLLETO INSTRUCCIONES VEI | INSTRUCTIONS LEAFLET VEI | 1 | _ | _ | 1 | _ | _ | | |
| 8 | R663099000 | SERIGRAFIA VAUBAN VECE-6/11 | SERIGRAPHY VAUBAN VECE-6/1 | _ | 1 | _ | _ | _ | _ | | |
| 8 | R663107000 | SERIGRAFIA VAUBAN VECP-6/11 | SERIGRAPHY VAUBAN VECP-6/1 | _ | _ | 1 | _ | _ | _ | | |
| 8 | R703043000 | SERIGRAFIA VAUBAN VEI-10/11 | SERIGRAPHY VAUBAN VEI-10/11 | _ | _ | _ | 1 | _ | _ | | |
| 8 | R673069000 | SERIGRAFIA VAUBAN VECE-10/11 | SERIGRAPHY VAUBAN VECE-10/ | _ | _ | _ | _ | 1 | _ | | |
| 8 | R673070000 | SERIGRAFIA VAUBAN VECP-10/11 | SERIGRAPHY VAUBAN VECP-10/ | _ | _ | _ | _ | _ | 1 | | |
| | | | | | | | | | | | |
| | | | | | | | | | | | |
| | | | | | | | | | | | |
| | | | | | | | | | | | |
| | | | | | | | | | | | |
| | | | | | | | | | | | |
| | | | | | | | | | | | |
| | | | | | | | | | | | |
| | | | | | | | | | | | |

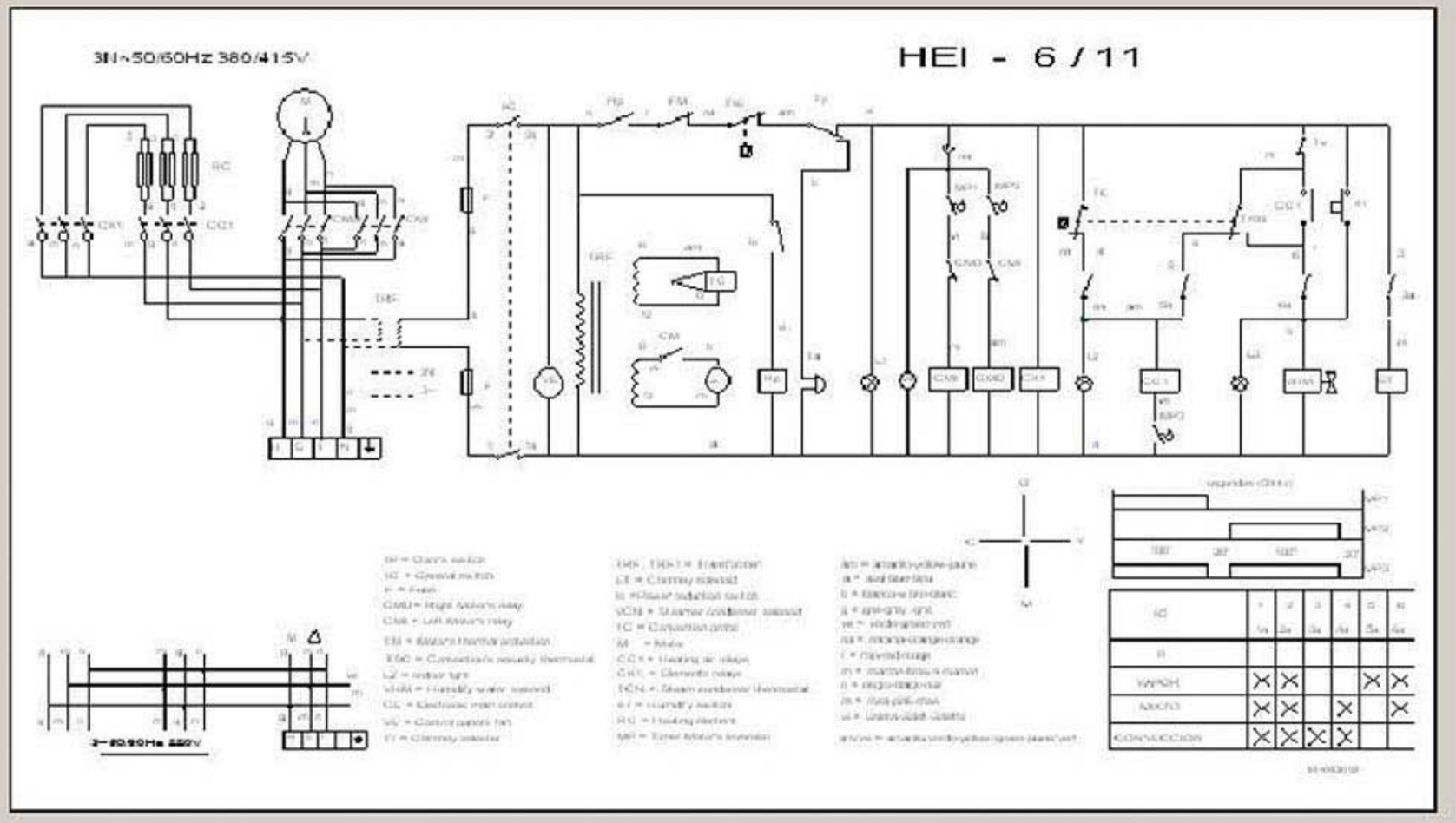


| | | | | | |
|---|---|---|---|---|---|
| - | - | - | - | R693018 | - |
| Zk./Nº | Pieza | Cant. | Materiala/Material | Klas. zk./Nº Clas. | Gainazal akabera/Tratamiento |
| Zk./Nº | Aldaketa/Modificaciones | | Nork proposatua/Propuesta de | Data/Fecha | Perdoi orokorrak<br>Tolerancias generales |
| - | - | | - | - | |
| - | - | | - | - | < 5 ± 0.2 / 50 ÷ 100 ± 0.8 |
| - | - | | - | - | 5 ÷ 25 ± 0.4 / >100 ± 1 |
| - | - | | - | - | 25 ÷ 50 ± 0.6 / α ± 1 |
| - | - | | - | - | |

| | Sinadura/Firma | Data/Fecha | | Gainazal perdoia<br>Mecanizado superficial |
|---|---|---|---|---|
| Marraztua/Dibujado | m.mallio | - | FAGOR<br>Fagor Industrial,Koop.Elk., Mugatua | — |
| Proiektatua/Proyectado | m.mallio | - | | |
| Egiaztatua/Comprobado | | - | | |
| Eskala/Escala<br>- | - | | | Plano Zk./Plano Nº<br>HC-78371 - |
| | | | | - Zk.ord.du |
| | Plano hau ezin daiteke erabili, ez berriztatu, gure baimenik gabe. | | | - Zk.gaitik ord. |

# HEM - 6/11 HEP- 6/11 E61 GHN

3N ~ 50/60Hz 380/415V

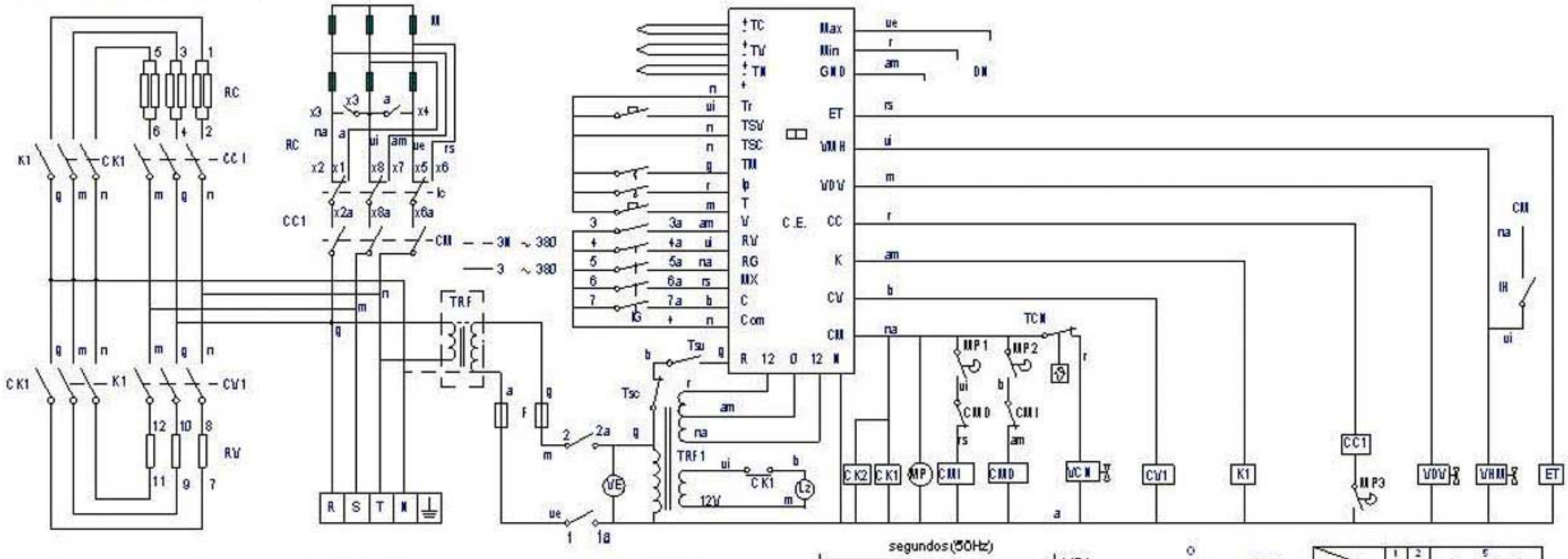


3 ~ 50/60Hz 230 V

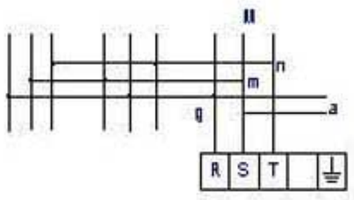


IP = Doors switch
IG = General switch
F = Fuse
CMD = Right Motor's relay
CMI = Left Motor's relay
VDV = Steamer's solenoid
DN = Water level control
TM = Motor's thermal protector
TSV = Steamer's security thermostat
TSC = Convection's security thermostat
LZ = Indoor light
VHM = Humidity water solenoid
CE = Electronic main control
RV = Steamer element
VE = Control panel's fan
Tr = Chimney selector

TRF, TRF1 = Transformer
ET = Chimney solenoid
Ic = Power reduction switch
VCN = Steamer condenser solenoid
TV = Steam probe
TC = Convection probe
TN = Food probe
M = Motor
CC1,CC2 = Heating air relay's
CV1,CV2 = Heating water relay's
CK1,CK2,K1,K2 = Element's relay's
TCN = Steam condenser thermostat
IH = Humidity switch
T = Timer or Food probe selector
RC = Heating element
MP = Timer Motor's fan motor




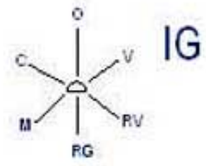


IG

| Mdo | 1 1a | 2 2a | 3 3a | 4 4a | 5 5a | 6 6a | 7 7a |
|---|---|---|---|---|---|---|---|
| OFF | | | | | | | |
| VAPOR | X | X | X | | | | |
| [illegible] | X | X | | X | | | |
| [illegible] | X | X | | | X | | |
| MIXTO | X | X | | | | X | |
| CONVECCION | X | X | | | | | X |

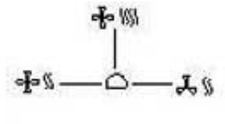

| Ic | x1 | x2 | x3 | x4 | x5 | x6 | x7 | x8 | x9 | x10 |
|---|---|---|---|---|---|---|---|---|---|---|
| | x1a — x2a | | x3a — x4a | | x5a — x6a | | x7a — x8a | | x9a | x10A |
| | X | | X | X | | X | X | | | |
| | X | | X | X | | X | X | | X | X |
| | | X | | | X | | | X | | |

R-663001

am = amarillo-yellow-jaune
a = azul-blue-bleu
b = blanco-white-blanc
g = gris-grey-gris
ve = verde-green-vert
na = naranja-orange-orange
r = rojo-red-rouge
m = marron-brown-marron
n = negro-black-noir
rs = rosa-pink-rose
vi = violeta-violet-violette
am/ve = amarillo/verde-yellow/green-jaune/vert

| | | | | | | |
|---|---|---|---|---|---|---|
| | ESQUEMA TEORICO HEM, HEP 6/11 | | | R663001000 | | |
| N° | Pieza | Cant. | Material | N° Clasificación | Acabado | |
| N° | Modificación | | Propiedad de | Fecha | Tolerancias generales | |
| | | | | | <3± | 50–100± : |
| | | | | | 3–25± : | >100± |
| | | | | | 25–50± : | X± |

| | Firma | Fecha | | |
|---|---|---|---|---|
| Dibujado | M. Mallo | 26-09-2005 | FAGOR | Mecanizado superficial |
| Proyectado | M. Mallo | 26-09-2005 | Fagor Industrial, Coop. Elk., Mugarra | |
| Comprobado | | 26-09-2005 | | |
| Escala | HORNO MIXTO HEM HEP | | | Plano número HC - 78304 |
| | | | | Sustituye al N° he72270 |
| | | | | Sustituido por |

# HEI - 10 / 11, HEI - 20 - 11

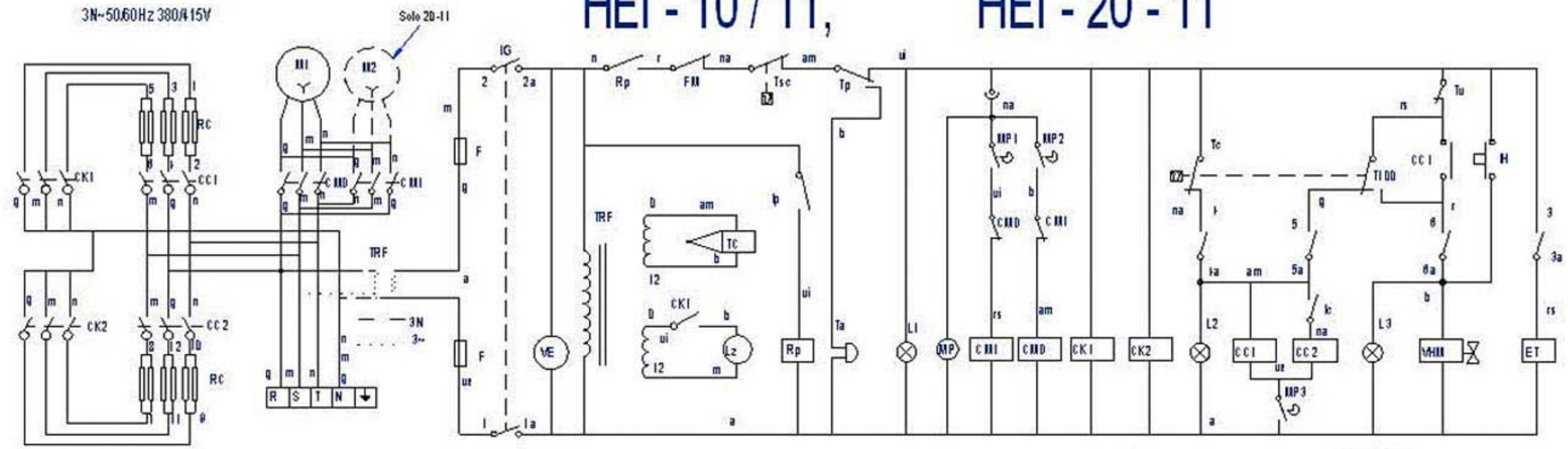


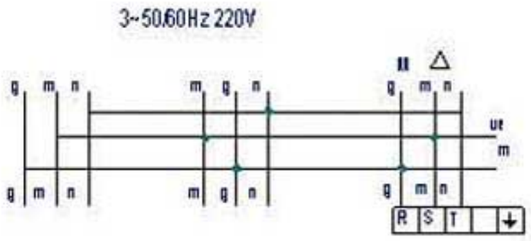


P = Door's switch
IG = General switch
F = Fuse
CMD = Right Motor's relay
CMI = Le ft Motor's relay
VM V = Steamer's solenoid
DN = Water level control
TM = Motor's thermal protection
TSV = Steamer's security thermostat
TSC = Conuction's security thermostat
LZ = Indoor light
VHM = Humidify water solenoid
CE = Electronic main control
RV = Steamer elements
VE = Control panel's fan
Tr = Chimney selector

TRF, TRF I = Transformer
ET = Chimney solenoid
Ic = Power reduction switch
VC N = Steamer condenser solenoid
TV = Steam probe
TC = Conuction probe
TN = Food probe
M = Motor
CC1 ,CC 2 = Heating air relays
CV1 ,C V2 = Heating water relays
CK1 ,C K2 ,K1 ,K2 = Elements relays
TC N = Steam condenser thermostat
IH = Humidify switch
T = Timer or Food probe selector
RC = Heating element
MP = Timer Motor's inversion

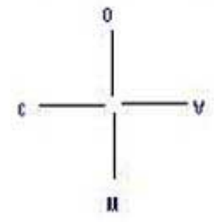


am = amarillo-yellow-jaune
a = azul-blue-bleu
b = blanco-white-blanc
g = gris-grey -gris
ve = verde-green-vert
na = naranja-orange -orange
r = rojo-red-rouge
m = marron-brown-marron
n = negro-black-noir
rs = rosa-pink-rose
ui = violeta-violet-violette

amve = amarillo/verde -yellow/green-jaune/vert

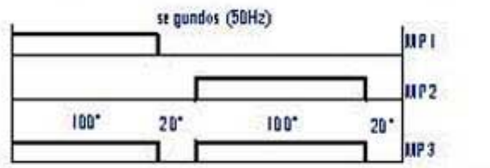


| IG | 1<br>1a | 2<br>2a | 3<br>3a | 4<br>4a | 5<br>5a | 6<br>6a |
|---|---|---|---|---|---|---|
| 0 | | | | | | |
| VAPOR | X | X | | | X | X |
| MIXTO | X | X | | X | | X |
| CONVECCION | X | X | X | X | | |

R1030+1000

T100: Termostato de 100ºC
Rc: Resistencia de calentamiento
IG: Interruptor general
Lz: Luz interior
F: Fusible
CMD, CMI: Contactor motor
VHM: Electrovalvula humidificador
IP: Interruptor puerta
FM: Térmico motor
TP: Temporizador manual
TSC: Termostato seguridad conuección
TV: Termostato vapor
TRF: Transformador

M: Motor
Tc: Termostato conuección
CK1, CC1 : Contactor calentamiento
ET: Electroimán de apertura de tiro
C: Condensador
LI: Lámpara marcha
L2: Lámpara calentamiento
L3: Lámpara humidificador
Ta: Timbre avisador
FI: Filtro de interferencias
IH: Pulsador de humidificador
VE: Ventilador cuadro eléctrico
Rp: Relé puerta
MP = Programador inuersion motor

| | | | | | |
|---|---|---|---|---|---|
| | | | 3 ~ 50/60Hz 230 V | | |
| | Esquema teorico HEI 10-11, HEI 20-11 | | 3 ~ 50/60Hz 400 V | R-703041 | |
| Nº | Pieza | | Material | Nº Clasificación | Acabado |
| Nº | Modificación | | Proyectado | Fecha | Tolerancias generales |
| 1 | Introducir HEI - 20-11 | | M.Mallo | 31-05-2001 | |

| | Firma | Fecha |
|---|---|---|
| Dibujado | Iratxe | 13/11/96 |
| Proyectado | | |
| Comprobado | | |

FAGOR
Fagor Industrial,Koop.Elk., Mugarra

Escala

HORNOS

Mecanizado superficial

Plano número
HC-76614 - 1

Sustituye al Nº

Sustituido por

# HEM - 10/11 HEP-10/11 E101 GHN

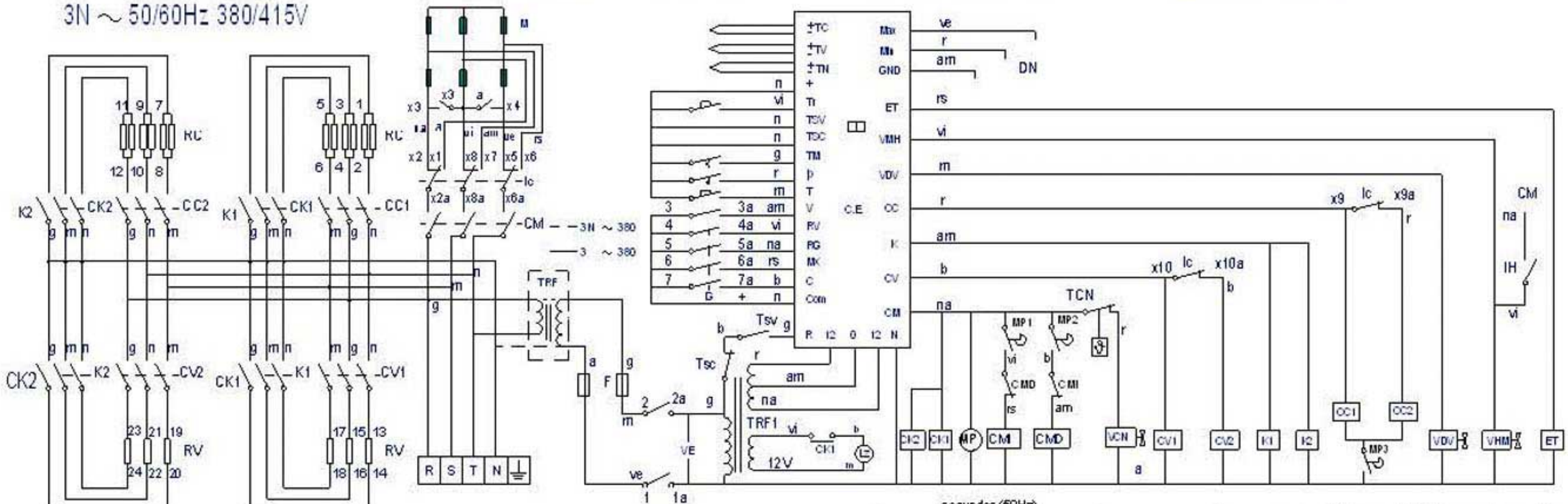


IP = Door's switch
IG = General switch
F = Fuse
CMD = Right Motor's relay
CMI = Left Motor's relay
VDV = Steamer's sole noid
DN = Water level control
TM = Motor's thermal protection
TSV = Steamer's security thermostat
TSC = Convection's security thermostat
LZ = Indoor light
VHM = Humidity water sole noid
CE = Electron b mala control
RV = Steamer elements
VE = Control panel's fan
Tr = Chimney selector

TRF, TRF1 = Transformer
ET = Chimney sole noid
Ic = Power reduction switch
VCN = Steamer condenser sole noid
TV = Steam probe
TC = Convection probe
TN = Food probe
M = Motor
CC1,CC2 = Heating air relays
CV1,CV2 = Heating water relays
CK1,CK2,K1,K2 = Elements relays
TCN = Steam condenser thermostat
IH = Humidity switch
T = Timer or Food probe selector
RC = Heating element
MP = Timer Motor's inversion

am = amarillo-yellow-jaune
a = azul-blue-bleu
b = blanco-white-blanc
g = gris-grey-gris
ve = verde-green-vert
na = naranja-orange-orange
r = rojo-red-rouge
m = marron-brown-marron
n = negro-black-noir
rs = rosa-pink-rose
vi = violeta-violet-violette
am/ve = amarillo/verde-yellow/green-jaune/vert

IG

| MM | 1 1a | 2 2a | 3 3a | 4a | 5 5a | 6a | 7a |
|---|---|---|---|---|---|---|---|
| OFF | | | | | | | |
| VAPOR | X | X | X | | | | |
| [illegible] | X | X | | X | | | |
| [illegible] | X | X | | | X | | |
| MIXTO | X | X | | | | X | |
| CONVECCION | X | X | | | | | X |

| Ic | x1 x1a | x2 x2a | x3 x3a | x4 x4a | x5 x5a | x6 x6a | x7 x7a | x8 x8a | x9 x9a | x10 x10A |
|---|---|---|---|---|---|---|---|---|---|---|
| | X | | X | X | | X | X | | | |
| | X | | X | X | | X | X | | X | X |
| | | X | | | X | | | X | | |

P-673074

| | | | | | | |
|---|---|---|---|---|---|---|
| | ESQUEMA TEORICO HBM, HEP 10/11 | | | R673074000 | | |
| N° | Pieza | Cant. | Material | N° Clasificación | Acabado | |
| N° | Modificación | | Propuesta de | Fecha | Tolerancias generales | |
| | | | | | <5± | 50–100± : |
| | | | | | 5–25± : | >100± |
| | | | | | 25–50± : | OX± |

| | Firma | Fecha |
|---|---|---|
| Dibujado | M. Mallo | 17-05-2005 |
| Proyectado | M. Mallo | 17-05-2005 |
| Comprobado | | 17-05-2005 |
| Escala | | |

FAGOR

Fagor Industrial, Koop. Elk., Mogarria

Mecanizado superficial

HORNO MIXTO HEM HEP

Plano número HC - 78178

Sustituye al N° he72270

Sustituido por

# HEM - 10/11 HEP-10/11 E101 GHN

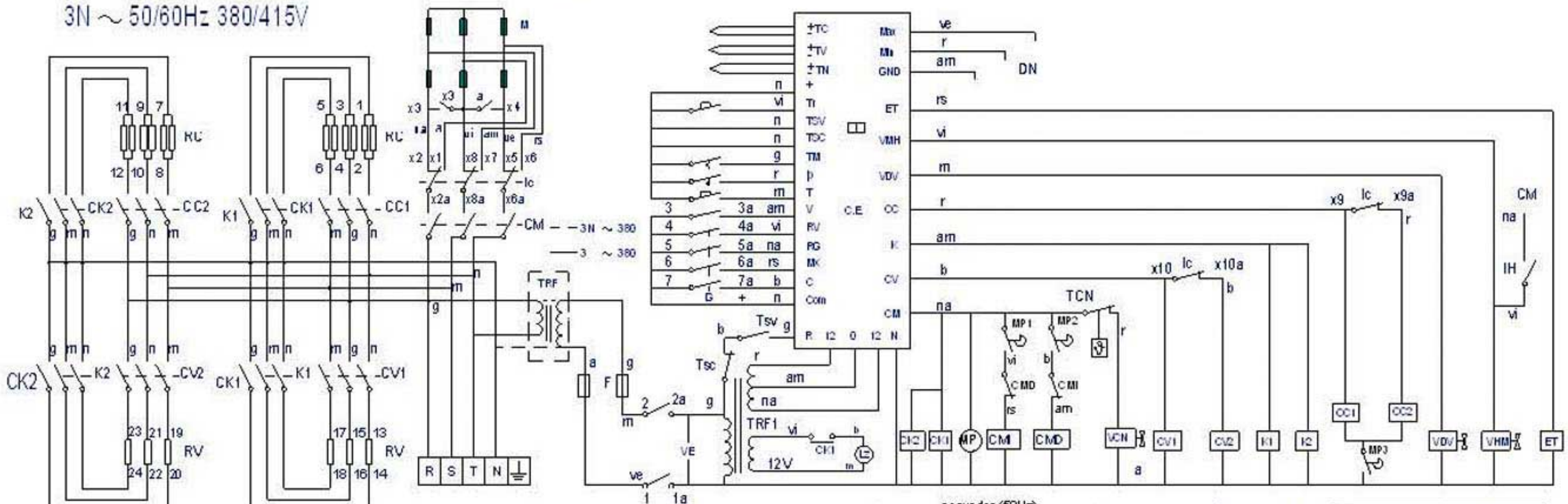


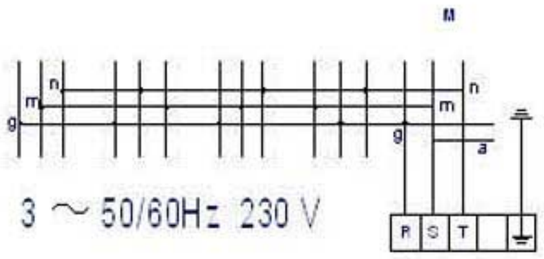


IP = Door's switch
IG = General switch
F = Fuse
CMD = Right Motor's relay
CMI = Left Motor's relay
VDV = Steamer's solenoid
DN = Water level control
TM = Motor's thermal protection
TSV = Steamer's security thermostat
TSC = Convection's security thermostat
LZ = Indoor light
VHM = Humidify water solenoid
CE = Electronic main control
RV = Steamer elements
VE = Control panel's fan
Tr = Chimney selector

TRF, TRF1 = Transformer
ET = Chimney solenoid
Ic = Power reduction switch
VCN = Steamer condenser solenoid
TV = Steam probe
TC = Convection probe
TN = Food probe
M = Motor
CC1, CC2 = Heating air relays
CV1, CV2 = Heating water relays
CK1, CK2, K1, K2 = Elements relays
TCN = Steam condenser thermostat
IH = Humidify switch
T = Timer or Food probe selector
RC = Heating element
MP = Timer Motor's inversion

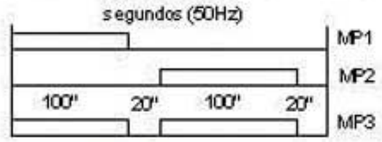


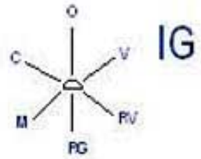


IG

| Mode | 1 1a | 2 2a | 3a | 4a | 5 5a | 6a | 7a |
|---|---|---|---|---|---|---|---|
| OFF | | | | | | | |
| VAPOR | X | X | X | | | | |
| [illegible] | X | X | | X | | | |
| [illegible] | X | X | | | X | | |
| MIXTO | X | X | | | | X | |
| CONJECCION | X | X | | | | | X |

am = amarillo-yellow-jaune
a = azul-blue-bleu
b = blanco-white-blanc
g = gris-grey-gris
ve = verde-green-vert
na = naranja-orange-orange
r = rojo-red-rouge
m = marron-brown-marron
n = negro-black-noir
rs = rosa-pink-rose
vi = violeta-violet-violette

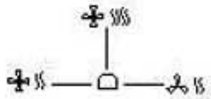

| Ic | x1 x1a | x2 x2a | x3 x3a | x4 x4a | x5 x5a | x6 x6a | x7 x7a | x8 x8a | x9 x9a | x10 x10A |
|---|---|---|---|---|---|---|---|---|---|---|
| | X | | X | X | | X | X | | | |
| | X | | X | X | | X | X | | X | X |
| | | X | | | X | | | X | | |

am/ve = amarillo/verde-yellow/green-jaune/vert

R-673074

| | | | | | | |
|---|---|---|---|---|---|---|
| | ESQUEMA TEORICO HEM, HEP 10/11 | | | R673074000 | | |
| N° | Pieza | Cant. | Material | N° Clasificacion | Acabado | |
| N° | Modificacion | | Propuesta de | Fecha | Tolerancias generales | |
| | | | | | <5± | 50–100± : |
| | | | | | 5–25± : | >100± |
| | | | | | 25–50± : | <X± |

| | Firma | Fecha |
|---|---|---|
| Dibujado | M. Mallo | 17-05-2005 |
| Proyectado | M. Mallo | 17-05-2005 |
| Comprobado | | 17-05-2005 |
| Escala | | |

FAGOR

Fagor Industrial, Koop. Elk., Mugatua

Mecanizado superficial

HORNO MIXTO HEM HEP

Plano numero HC - 78178

Sustituye al N° hc72270

Sustituido por

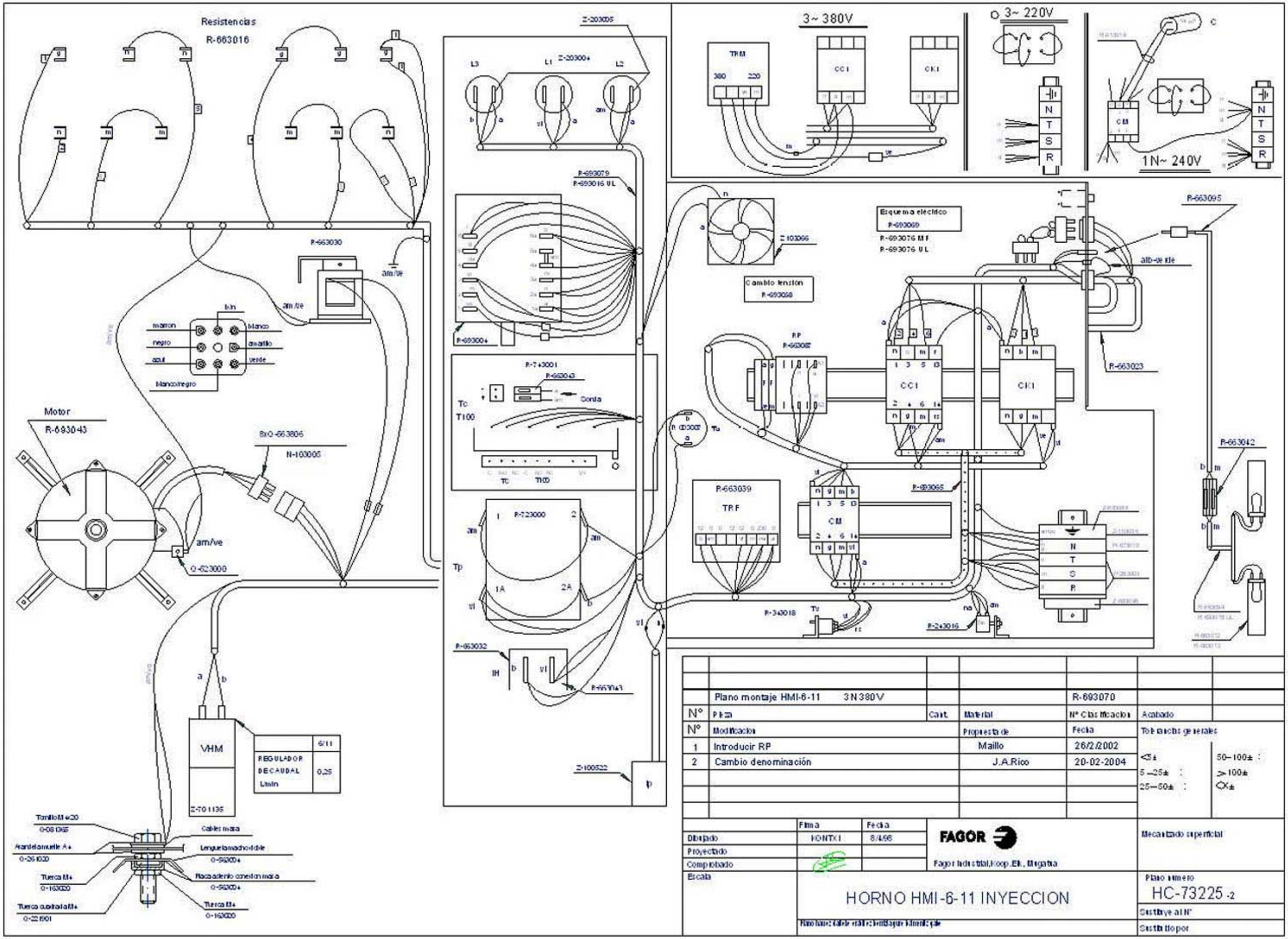


| | | | | | | |
|---|---|---|---|---|---|---|
| | Plano montaje HMI-6-11 3N380V | | | R-693070 | | |
| Nº | Pieza | Cant. | Material | Nº Clasificacion | Acabado | |
| Nº | Modificacion | | Propuesta de | Fecha | Tolerancias generales | |
| 1 | Introducir RP | | Maillo | 26/2/2002 | <5± | 50–100± : |
| 2 | Cambio denominación | | J.A.Rico | 20-02-2004 | 5–25± : | >100± |
| | | | | | 25–50± : | <X± |

| | Firma | Fecha |
|---|---|---|
| Dibujado | KONTXI | 8/4/98 |
| Proyectado | | |
| Comprobado | | |
| Escala | | |

FAGOR

Fagor Industrial, Koop. Elk., Mugatua

Mecanizado superficial

# HORNO HMI-6-11 INYECCION

Plano número HC-73225 -2

Sustituye al Nº

Sustituido por

Plano base: Galete estilo: hertzlaguna kimenik gale

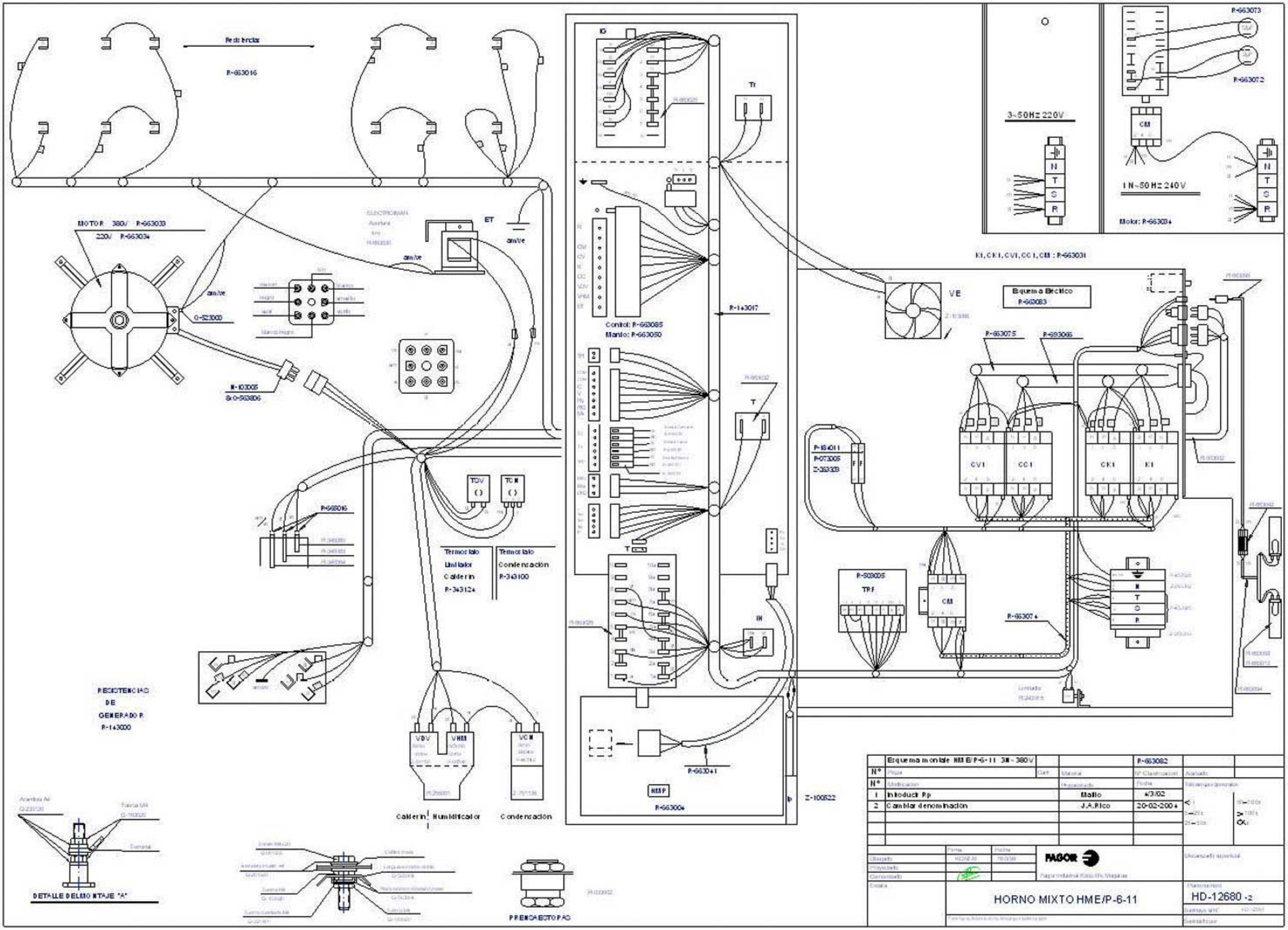

Resistencias
R-663016
MOTOR 380V R-663033
220V R-663034
ET
am/ve
Q-523000
N-103005
Control: R-663085
Mando: R-663050
R-143017
Tr
T
IH
HMP
R-663004
R-663041
Z-100522
VE
Esquema Eléctrico
R-663083
R-663075
R-693066
CV1
CC1
CK1
K1
R-503005
TRF
CM
R-663074
3~50Hz 220V
1N~50Hz 240V
Motor: R-663034
R-663073
R-663072
K1, CK1, CV1, CC1, CM : R-663031
TCV
TCM
Termostato Limitador Calderin R-343124
Termostato Condensación R-343100
VDV
VHM
VCM
Calderin
Humidificador
Condensación
RESISTENCIAS DE GENERADOR R-143000
DETALLE DEL MONTAJE "A"
PRENSAESTOPAS
Esquema montaje HME/P-6-11 3N~380V
R-663082
Introducir Rp
Mallo
4/3/02
Cambiar denominación
J.A.Rico
20-02-2004
FAGOR
HORNO MIXTO HME/P-6-11
HD-12680 -2

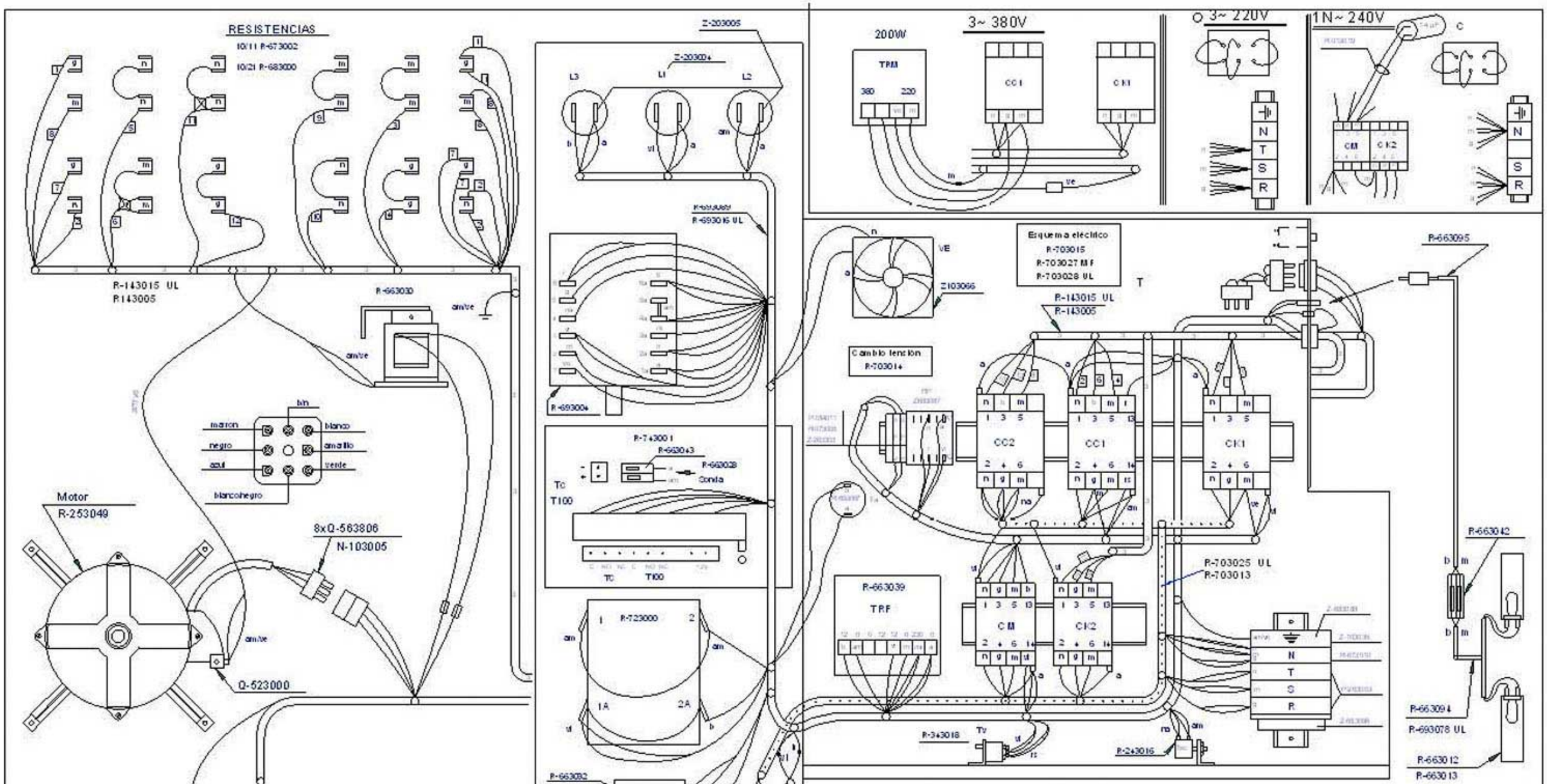


| | | | | | | |
|---|---|---|---|---|---|---|
| | Plano mont HMI-10-11/20-21 3N 380V | | | R-703016 | | |
| N° | Pieza | Cant. | Material | N° Clasificación | Acabado | |
| N° | Modificación | | Propuesta de | Fecha | Tolerancias generales | |
| 1 | Introducir Rp | | Maillo | 26/2/2002 | <5± | 50–100± : |
| 2 | Cambio denominación | | J.A.Rico | 20-02-2004 | 5–25± : | >100± |
| | | | | | 25–50± : | <X± |

| | Firma | Fecha |
|---|---|---|
| Dibujado | KONTXI | 8/4/98 |
| Proyectado | | |
| Comprobado | | |
| Escala | | |

FAGOR

Fagor Industrial, Koop. Elk., Mugatua

Mecanizado superficial

HORNO HMI-10/11 INYECCION

Plano número HC-73224-02

Sustituye al N°

Sustituido por

Resistencias

20/21 20/11 TANDO
LA CONEXIÓN ES IDEAL
PARA LAS RESISTENCIAS
INFERIORES

ELECTRONICA
Ajustes
Ind.
R-663032

ET

a/m/ve

a/m/ve

a/m/ve

sdo 20/11 20/21
R-059004

CO LO 20/11 20/21
T- 133001

MOTOR

380V R-663033
220V R-663034

R-103005
SDO R-043004

Sdo 20/11 20/21

R-668016

TDV

TDM

Termostato
Limitador
Caldertn
R-343124

Termostato
Condensación
R-343100

RESISTENCIAS
DE
GENERADOR
R-143000

SOLO VERSION
20/21

VDV

VHM

VCM

Caldertn

Humidificador

Condensación

DETALLE DELMONTAJE "A"

PRENSAESTOPAS

IG

Tr

Central R-663035
Mando R-663050

R-143017

T

T

R-143009

IH

R-663041

HMP
R-663004

R-093012 UL
R-059004
Sdo 20/11 20/21

Z-100522

3~50Hz 220V

N
T
S
R

R-663073

R-663072

CM
CK

1 N~50 Hz 240V

Mota: R-663034

| CONTACTO PED | | 20/21 | 10/11-10/21-20/11 | 20/11 TANDO |
|---|---|---|---|---|
| CC1, CC2, CK1, CK2, K1, K2 | | X-183011 | R-663031 | X-183011 |
| *CV1, CV2 | | X-183011 | R-663031 | R-663031 |

Esquema Electrico
20/21-20/11 R-143019
10/11-10/21 R-673058

VE

CV2
CC2
CV1
CC1
CK1
K1

R-663031

R-503005
TRF

CM
CK2
K2

N
T
S
R

Esq mon E/P-101/102/201/202 3N~380V
R-143018

| | | | | |
|---|---|---|---|---|
| N° | Plano | Cant. | Material | Nº Clasificación |
| N° | Modificación | | Proyectado | Fecha |
| | Sustituye R-140032 por X-183011 en frontal 20/21 | | Editado | 09.07.20 |
| | Introducir R9 | | Copia | 02.02.21 |
| | Cambio denominación | | JAVIER | 20.02.2014 |

Acabado
Tolerancias generales
<0,1 0,1—0,5 0,5—1 1—2,5 2,5—10 >10 Qx

| | Firma | Fecha |
|---|---|---|
| Dibujado | JON | 16.2.99 |
| Proyectado | | |
| Comprobado | | |
| Escala | | |

FAGOR
Fagor Industrial Soc. Coop. Mondragón

Mecanizado superficie

HORNO MIXTO
HMEP 10-11/ 10-21
HMEP 20-11/ 20-21

Plano número
HD-12681 -3
Sustituye a/n°
HD-12491
Sustituido por

# KIT 400V SIN NEUTRO HORNOS ELECTRICOS xx/11
# 1100002826

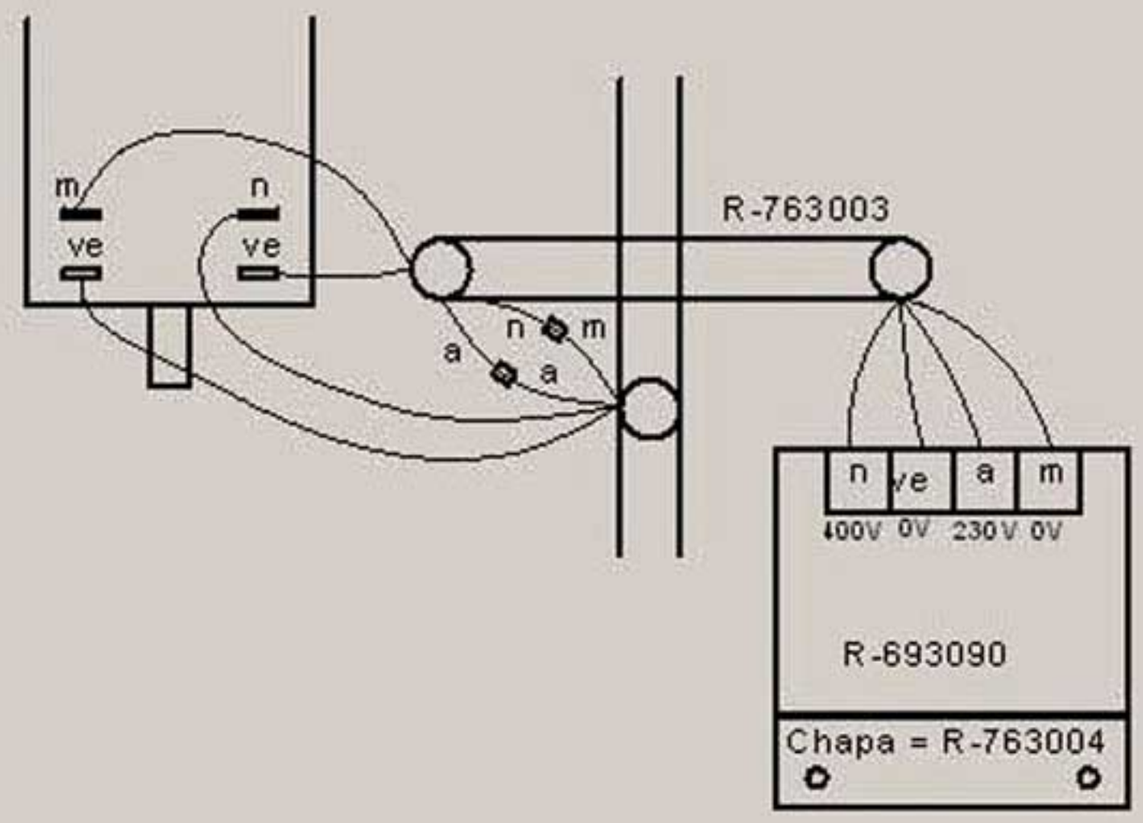


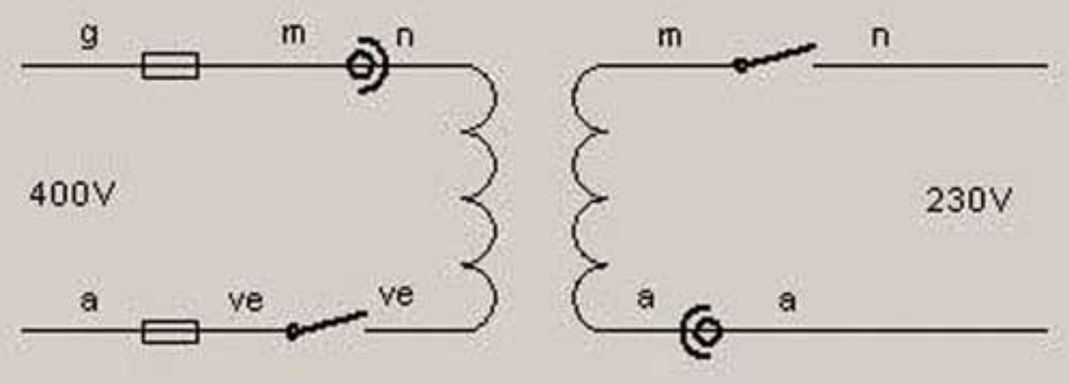


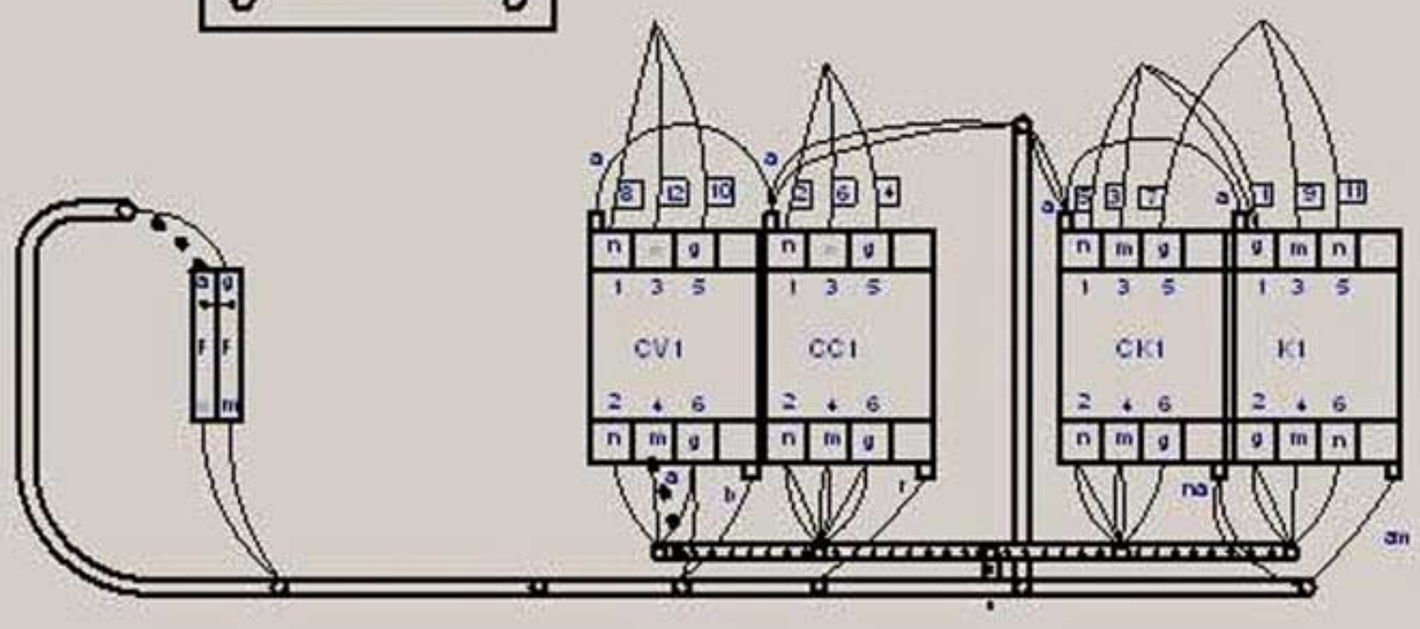


# KIT 200V

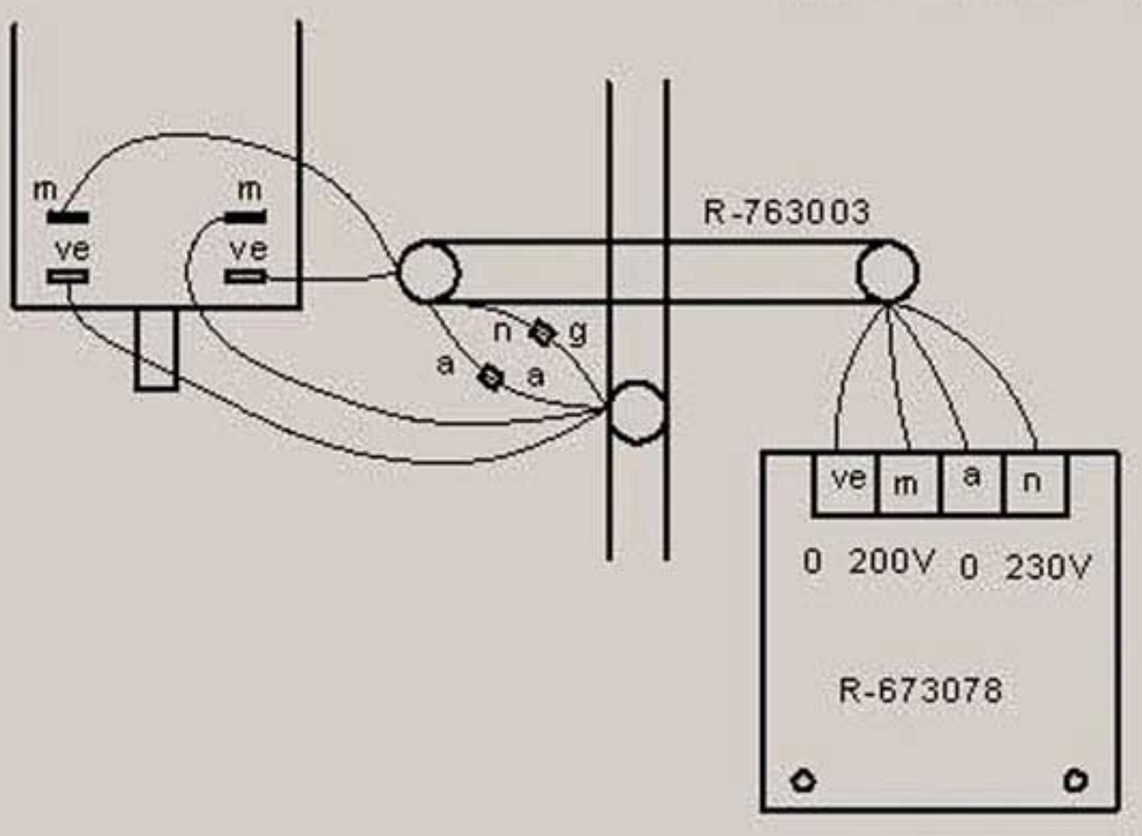


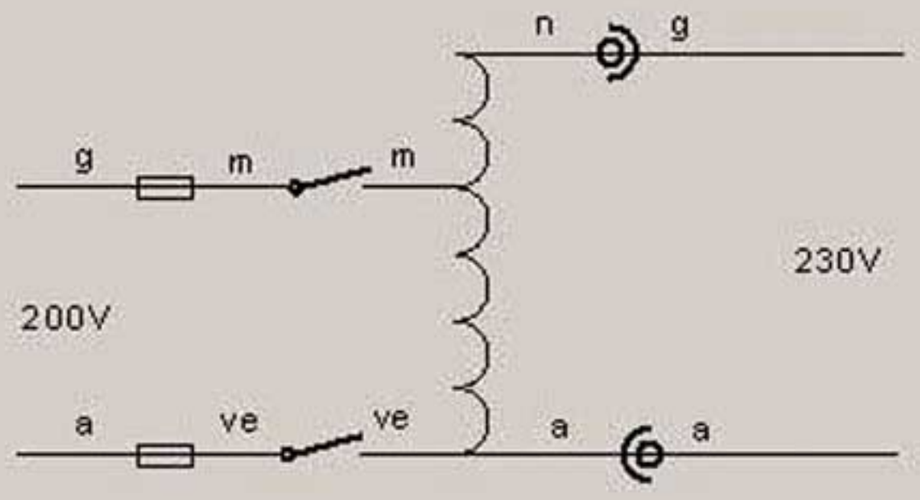


| | | | | | | |
|---|---|---|---|---|---|---|
| | Plano de montaje | | | R-693091 | | |
| Nº | Pieza | Cant. | Material | N° Clasificacion | Acabado | |
| Nº | Modificacion | | Propuesta de | Fecha | Tolerancias generales | |
| 01 | Añadir modificadión necesaria para versión sin neutro | | e.carrascal | 2008-01-26 | <5± / 5–25± / 25–50± / 50–100± / >100± / ∝± | |

| | Firma | Fecha |
|---|---|---|
| Dibujado | KONTXI | 7/5/2002 |
| Proyectado | | |
| Comprobado | | |

FAGOR

Fagor Industrial,Koop.Elk, Mugatua

Mecanizado superficial

Escala

# HORNOS

Plano numero HB-72194 -01

Sustituye al N°

Sustituido por

Plano hau ez dakieke erabil ez berriz lagure baimenik gabe