CELULAS /CHILL BLASTER CELLS
21-07-14 V0.0

MODEL

Nº	CODE CÓDIGO	RECOM.	DESCRIPTION	DESCRIPCIÓN	CM-201
1	12069110		FRONT ROOF CM-201	FRONTAL TECHO CM-201	1
2	12069107		BACK ROOF CM-201	RESPALDO TECHO CELULA CM-201	1
3	12069112		SIDE ROOF CM-201	LATERAL TECHO CM-201	2
4	12093292		DEFLECTOR LEFT CHILL BLASTER	DEFLECTOR IZDO CELULA	2
5	12068090		BOLT FIXING COVER 051	PERNO FIJ.REJILLA ATM-051 VCH	4
6	12069406		SUPPORT HEART PROBE	SOPORTE SONDA PINCHO ATM	1
7	12093299		DEFLECTOR RIGHT CHILL BLASTER	DEFLECTOR DCHO CELULA	2
8	12083961		CONTROL PANEL CHILL BLASTER	C.MANDOS CELULAS	1
9	12069475		LEFT SUPPORT CONTROL PANEL	SOPORTE IZDO CUADRO DE MANDOS	1
10	12069476		RIGHT SUPPORT CONTROL PANEL	SOPORTE DCHO CUADRO DE MANDOS	1
11	12068186		EVAP.56T3R440A4.5S CM-201	BAT.56T3R440A4.5S	1
12	12069710		COVER LEFT ELBOW CM-201	CUBRECODOS IZDO CM-201	1
13	12069704		COVER RIGHT ELBOW CM-201	CUBRECODOS DCHO CM-201	1
14	12069705		FAN SUPPORT CM-201	SOPORTE VENTILADOR CM-201	1
15	12069706		EVAPORATOR SUPPORT CM-201	SOPORTE EVAPORADOR CM-201	6
16	12069711		COVER BOX EVAPORATOR CM-201	TAPA CAJA EVAPORADOR CM-201	1
17	12069712		DRAIN TRAY EVAP.CM-201	BANDEJA DESAGUE EVAP.CM-201	1
18	12067630		VALVE TES5 ROSC 1/2-5/8 CHILL BLASTER	VALVULA TES5 ROSC 1/2-5/8 CELU	1
19	12067631		HOLE TES5 Nº1 CHILL BLASTER	ORIFICIO TES5 Nº1 CELULAS	1
20	12067692		PRENSAESTOPAS PG16E GRIS	PRENSAESTOPAS PG16E GRIS	1
21	12026785		FAN D300 220V 50/60 C.2MF	VENT.ATM D300 220V 50/60 C.2MF	4
22	12068285		STEEL HINGE 40X40X1	BISAGRA INOX 40X40X1(4TALADRO)	5
23	12037489		DRAIN 3/4	DESAG COMPL 3/4 GRIS+TUERCA	1
24	12068106		NUT THREAD SAE 5/8"	"TUERCA CON ROSCA SAE 5/8"""	1
25	12068101		NUT SAE 1/2	TUERCA SAE 1/2	1
26	12068102		NUT SAE 1/4	TUERCA SAE 1/4	1
27	12066767		ELBOW H CUH-01	CODO H CUH-01 TUB.MET22-28/40	1
29	12093617		ELEMENT THERMOSTAT VALVE TES5	ELEM.TER.VALV.TES5	1
30	12068656		FRONT BUMPER CHILL BLASTER	PARAGOLPES FRONTAL CELULA	2
31	12068313		BUMPER FIXING CHILL BLASTER	CASQUIL FIJ.PARAGOLPES CELULAS	4
32	12067633		EXCHANGER HE1.5	INTERCAMBIADOR HE 1.5	1
34	12027512		SOLENOID VALVE 1/2	VALVUL.SOLE.1/2 ODS 220V 50/60	1
35	12069980		SOLENOID VALVE SUPPORT	SOPORTE VALV.SOLENOIDE	1
36	12069722		EVAPORATOR DECORATIVE TUBES CM-201	DECORATIVO TUBOS EVAPOR CM-201	1
37	12067545		FUSE 1A 5x20	FUSIBLE 1A 5x20	1
38	12067547		FUSE HOLDER 5x20	PORTAFUSIB.PANEL5x20 R03.500-1	1
39	12067790		ELECTRICAL INSTALLATION CHAMBER CM-201	INSTAL.ELECTR.CAMARA CM-201	1
40	12067791		ELECTRICAL INSTALLATION MANG. CM-201	INSTALACION MANGUERA CM-201	1
41	12069907		TOP ELECTRICAL ELEMENTS	TAPA ELEMENTOS ELECT.	1
42	12069995		ELECTRICAL INSTALLATION BOX CHILL BLASTER	CAJA INSTALACION ELEC. CELULAS	1
43	12115938		PROGRAM PCO SPARE CHILL BLASTER	PCO PROGRAMADA CELULAS RECAMB.	1
44	12040126		CONNECTOR BOARD PCOXS	CONECT TOR.TAR.CAREL PCOXS	1
45	12027150		DISPLAY 132X64 PGD1	DISPLAY 132X64 PGD1	1
46	12027982		HEAT HEART PROBE ATM	SONDA NTC CALEFACTADA ATM	1
47	12045530		SONDA NTC 2,5 MTS (NTC025HP00)	SONDA NTC 2,5 MTS (NTC025HP00)	2
48	12031414		TRANSFORMER.25VA PCOxs	TRANSFOR.25VA PCOxs ATM	1
49	12040070		BOTON AD.FAGOR 670x160	BOTON AD.FAGOR 670x160 ATM-102	1
50	12040085		CABLE CONNECTION .pCOxs-DYSPLAY	CABLE CONEX.pCOxs-DYSPLAY ATM	1
51	12067541		BUZZER	ZUMBADOR C.CABLE 511-7636 ATM	1
52	12092164		RAIL TERMINAL PHOUT 4.0 BU AZUL	BORNE CARRIL PHOUT 4.0 BU AZUL	3
53	12067759		PRENSAESTO AG32-GR M32	PRENSAESTO AG32-GR ATM-102 M32	3
54	12067554		BREAKER SWITCH 25A	INTERRUPTOR CORTE 25A III VO	1
55	12067587		RAIL TERMINAL UT2.5	BORNE CARRIL DE PASO UT2.5	24
56	12067588		RAIL TERMINAL UT6PE	BORNE CARRIL PASO TIERRA UT6PE	1
57	12034668		RELAY RPW508730 220V 2CT	CONT.WEIDM. RPW508730 220V 2CT	1
58	12069992		RAIL TERMINAL SUPPORT	SOPORTE BORNES CARRIL ELEC.CM	1
59	12069993		BREAKER SWITCH SUPPORT	SOPORTE INT.DE CORTE CM	1
60	12067563		HANDLE KCF1PZ PARA IN.CORTE VO	MANETA KCF1PZ PARA IN.CORTE VO	1
61	12092161		RAIL TERMINAL PHOUT 2.5 BU BLUE	BORNE CARRIL PHOUT 2.5 BU AZUL	7
62	12069746		BUMPER SIDE FIXING CM-201	FIJAC.LATERAL PARAGOLP.CM-201	2
63	12066787		BUMPER SIDE CM-201	PARAGOLPES LATERAL CM-201	2
64	12066786		BUMPER BACK CHILL BLASTER	PARAGOLPES TRASERO 201	2
65	12024066		TIE BREAKER MAGNETIC	AMARRE INTERRUPTOR MAGNETICO	1
66	12024477		MAGNETIC SWICHT	INTERRUPTOR MAGNETICO	1
67	12024384		MAGNETIC	IMAN	1
68	12069113		MAGNETIC COVER	CUBRE-IMAN MICRO-PUERTA	1
69	BISA14		HINGE CHILL BLASTER	BISAGRA PUERTA CELULA	2
70	CONJ03		COMPLETE HANDLE CHILL BLASTER	TIRADOR COMPLETO PUERTA CELULA	1
71	RE185080C		DOOR RESISTANCE CHILL BLASTER	RESISTENCIA MARCO PUERTA CELULA	1
72	B1185080		TRIANGULAR GASKET CHILL BLASTER	BURLETE TRIANGULAR PUERTA CELULA	1
73	B2185080		GASKET DOOR LOW CHILL BLASTER	BURLETE BAJO PUERTA CELULA	1
74	V		PRESSURE BALANCING VALVE	VALVULA EQUILIBRADORA DE PRESIONES CELULA	1

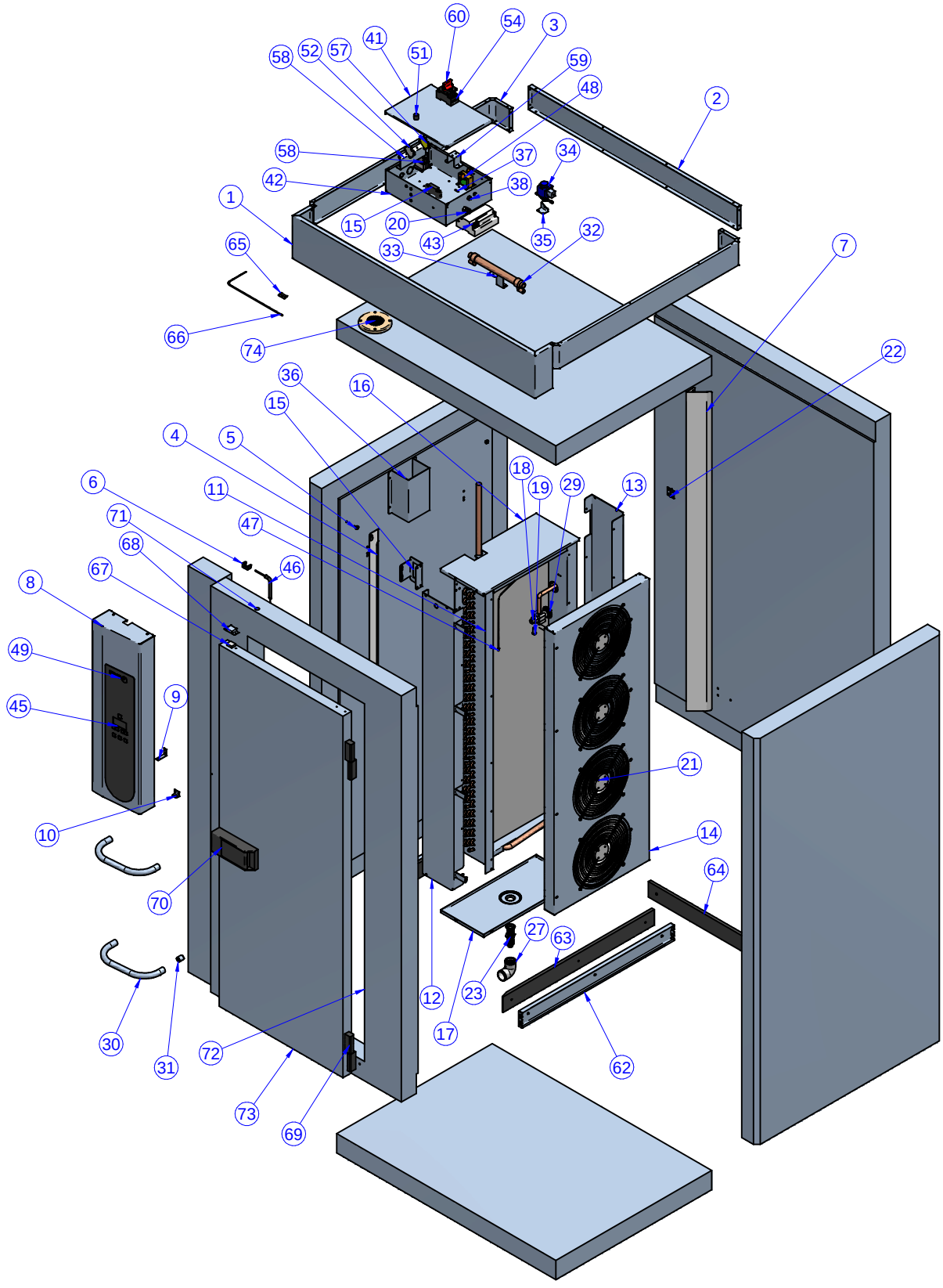

CNC:

-	SPARE PARTS CM-201	-		-	
Nº	TITLE	QTY	CODE	MATERIAL	TREATMENT

GENERAL TOLERANCES: ISO 2768-1 Very Coarse

LINEAR

	Fine	Medium	Coarse	Very Coarse
<3mm	±0.05	±0.10	±0.15	
3-6mm	±0.05	±0.10	±0.20	
6-30mm	±0.10	±0.20	±0.50	
30-120mm	±0.15	±0.30	±0.80	
120-400mm	±0.20	±0.50	±1.20	
400-1000mm	±0.30	±0.80	±2.00	
1000-2000mm	±0.50	±1.20	±3.00	

ANGULAR

	Fine	Medium	Coarse	Very Coarse
<10mm	±1º		±1º30'	±3º
10-50mm	±30'		±1º	±2º
50-120mm	±20'		±30'	±1º
120-400mm	±10'		±15'	±30'
>400mm	±5'		±10'	±20'

GENERAL TOLERANCE FOR FORM AND POSITION: ISO 2768-2

DESIGNED BY	VALIDATED BY	DATE
J.A.PULIDO	21-02-2014	

SHEET FORMAT:	A4
DESING CENTER:	LCN
MAT STATUS:	
DOC STATUS:	
SHEET:	1 / 1
SCALE:	1:25

VERSION	00	REVISION	

PROPOSED BY: ISSUE DATE: