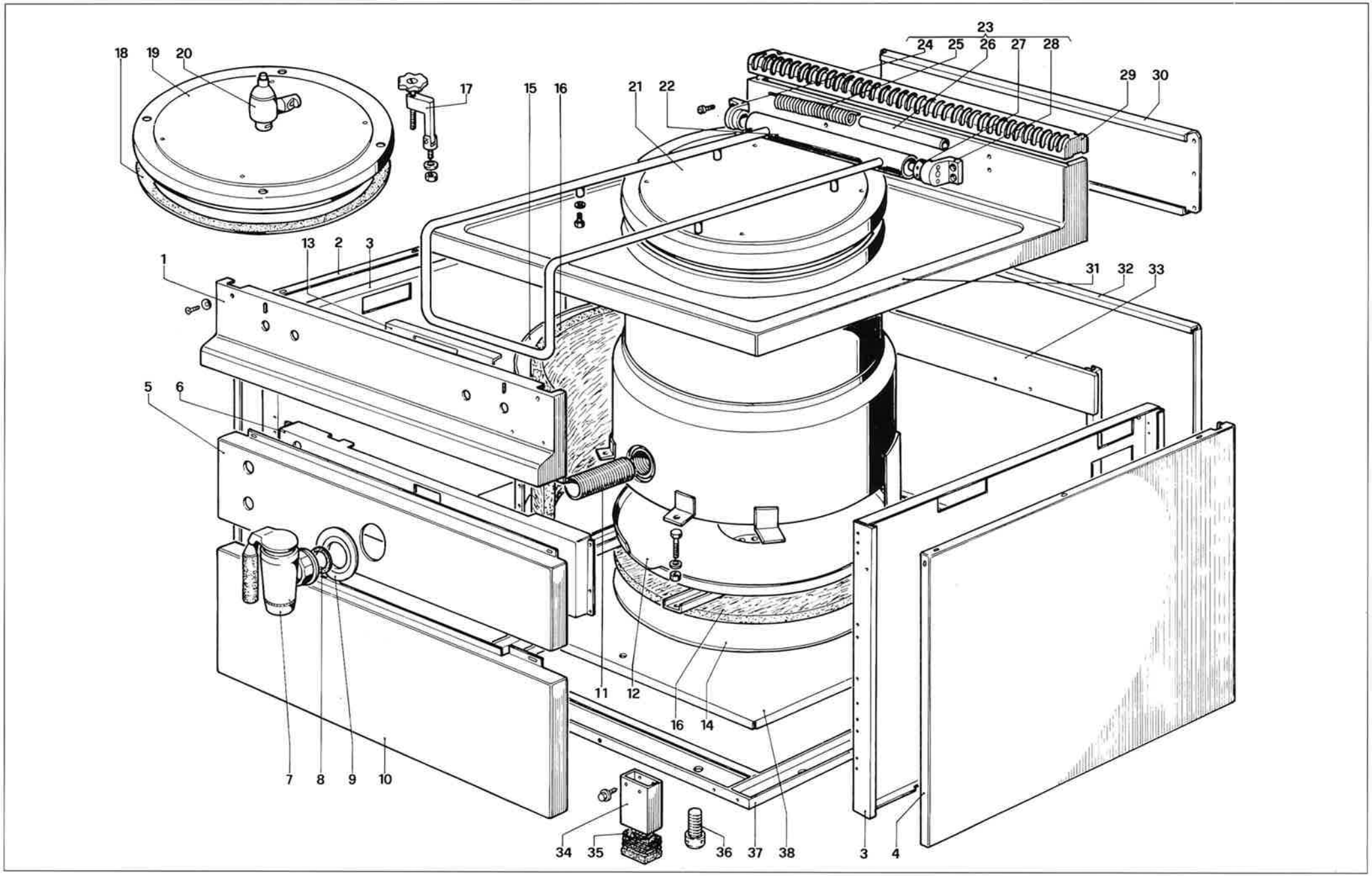


MBM

MAGISTRA

TAV. 48

# TAV. 48 STRUTTURA E100/E150 STRUCTURE *STRUCTURE* STRUKTUR

| | Codice | Denominazione | Denomination | *Denomination* | Bezeichnung | E100 | E100A | E150 | E150A |
|---|---|---|---|---|---|---|---|---|---|
| 1 | GACP800041 | **Cruscotto** | Panneau de contrôle | *Control panel* | Stirnbrett | ● | ● | ● | ● |
| 2 | PACU800008 | **Fianco sinistro** | Côté gauche | *Left side* | Linke Seite | ● | ● | ● | ● |
| 3 | PACP800004 | **Contro fianco** | Contre côté | *Counter side* | Gegenseite | ● | ● | ● | ● |
| 4 | PACU800009 | **Fianco destro** | Côté droit | *Right side* | Rechte Seite | ● | ● | ● | ● |
| 5 | GACP800046 | **Facciata superiore** | Panneau supérieur | *Front panel* | Aussenvorderwand | ● | ● | | |
| 5 | GACP00048 | **Facciata superiore** | Panneau supérieur | *Front panel* | Aussenvorderwand | | | ● | ● |
| 6 | PACP800036 | **Contro facciata** | Contre panneau antérieur | *Counter front panel* | Gegenvorderwand | ● | ● | | |
| 6 | PACP800003 | **Contro facciata** | Contre panneau antérieur | *Counter front panel* | Gegenvorderwand | | | ● | ● |
| 7 | RTCP900004 | **Rubinetto scarico 2''** | Robinet de décharge 2'' | *Discharge tap 2''* | Ablasshahn 2'' | ● | ● | ● | ● |
| 8 | RTCP900025 | **Guarnizione** | Garniture | *Gasket* | Dichtung | ● | ● | ● | ● |
| 9 | RTCP900018 | **Borchia** | Clou | *Boss* | Auflage | ● | ● | ● | ● |
| 10 | PACP800094 | **Pannello inferiore** | Panneau inférieur | *Lower panel* | Untere Tafel | ● | ● | | |
| 10 | PACP800095 | **Facciata inferiore** | Panneau inférieur | *Lower panel* | Untere Tafel | | | ● | ● |
| 11 | RTCP8000002 | **Niples 2''** | Niples 2'' | *Niples 2''* | Nippel 2'' | ● | ● | ● | ● |
| 12 | GACP900016 | **Fondo porta resistenze** | Base porte résistances | *Bottom elements holder* | Widerstandsgehäuse | ● | ● | ● | ● |
| 13 | PACP800085 | **Contracruscotto** | Contre panneau de contrôle | *Counter control panel* | Gegenstirnbrett | ● | ● | ● | ● |
| 14 | PACP900049 | **Fondo porta isol. resist.** | Panneau inférieur | *Lower plane* | Widerstandsgehäuse | ● | ● | ● | ● |
| 15 | PACP900046 | **Coprilana** | Panneau couvre isolant | *Insulating panel covering* | Isoliermaterialverkleidung | ● | ● | | |
| 15 | PACP900047 | **Coprilana** | Panneau couvre isolant | *Insulating panel covering* | Isoliermaterialverkleidung | | | ● | ● |
| 16 | MPLAN40N00 | **Pannello isolante** | Panneau isolant | *Insulating panel* | Isoliertafel | ● | ● | ● | ● |
| 17 | RTCP800056 | **Tirante coperchio** | Barre de jointure du convercle | *Cover stay rod* | Autoklav-Anzugstance | | ● | | ● |
| 18 | MPGOM02P00 | **Guarnizione coper. autoclave** | Garniture pour couvercle aut. | *Gasket for automatic cover* | Autoklavdeckeldictung | | ● | | ● |
| 19 | RTCP900010 | **Coperchio autoclave** | Couvercle autoclave | *Autoclave cover* | Autoklavdeckel | | ● | | ● |
| 20 | RTCP900014 | **Valvola coperchio** | Soupape couvercle | *Cover valve* | Sicherheitsventil | | ● | | ● |
| 21 | RTCP800009 | **Coperchio** | Couvercle | *Cover* | Topfdeckel | ● | | ● | |
| 22 | RTCP800031 | **Maniglia coperchio** | Poignée du couvercle | *Cover handle* | Deckelgriff | ● | | ● | |
| 23 | RTCP800025 | **Cerniera completa** | Charnière complète | *Complete hinge* | Türangel | ● | | ● | |
| 24 | RTCP800029 | **Terminale sin. cerniera** | Terminal gauche de la charnière | *Hinge lift terminal* | Linker Endverschluss | ● | | ● | |
| 25 | RTCP800026 | **Molla cerniera** | Ressort de la charnière | *Hinge spring* | Scharnierfeder | ● | | ● | |
| 26 | RTCP800027 | **Guida molla cerniera** | Guide pour ressort charnière | *Hinge spring guide* | Türfederführung | ● | | ● | |
| 27 | RTCP800028 | **Regolatore molla** | Réguolateur du ressort | *Spring regulator* | Federregler | ● | | ● | |
| 28 | RTCP800030 | **Terminale dx cerniera** | Terminal droit de la charnière | *Hinge right terminal* | Rechter Endverschluss | ● | | ● | |
| 29 | GACU800014 | **Griglia caminetto** | Grille de la cheminée | *Chimney grate* | Schornsteinrost | ● | ● | ● | ● |
| 30 | PACP800087 | **Fondello caminetto sup.** | Protection derr. cheminée d'évac. | *Superior chimney bottom* | Schornsteinbodenscheide | ● | ● | ● | ● |
| 31 | GACP800043 | **Pentola E100** | Recipient | *Bowl* | Topfbehälter | ● | ● | | |
| 31 | GACP800042 | **Pentola E150** | Recipient | *Bowl* | Topfbehälter | | | ● | ● |
| 32 | PACU800019 | **Posteriore inox** | Panneau postérieur | *Back panel* | Inox-Ruckwand | ● | ● | ● | ● |
| 33 | GACP800001 | **Telaio rinforzo coperchio** | Raidissement couvercle | *Cover reinforcement* | Abdeckungsverstärkungsrahmen | ● | ● | ● | ● |
| 34 | PACU800103 | **Piedino inox** | Pied inox | *Stainless steel foot* | Inox-Fuss | ● | ● | ● | ● |
| 35 | RTTAV00006 | **Supporto regolatore** | Support du régulateur | *Regulator support* | Reglerhalterung | ● | ● | ● | ● |
| 36 | RTCU800022 | **Regolatore piedino** | Régulateur du pied | *Foot regulator* | Fussregler | ● | ● | ● | ● |
| 37 | GACU800001 | **Basamento** | Chassis | *Base* | Untergestell | ● | ● | ● | ● |
| 38 | PACP800086 | **Piano inferiore** | Plan inférieur | *Lower plane* | Untere Ebene | ● | ● | ● | ● |

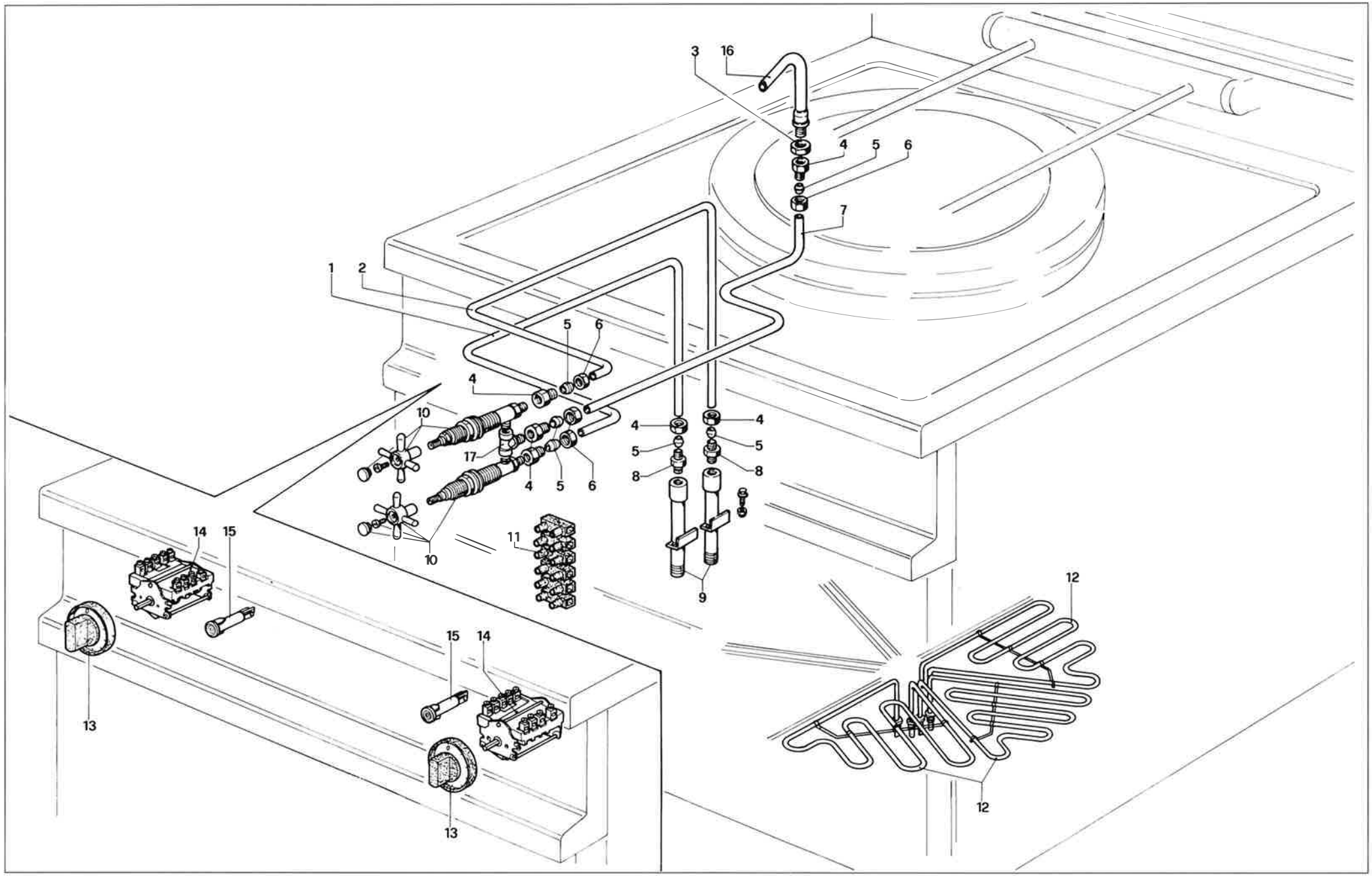


MAGISTRA

TAV. 50

# TAV. 50 **IMPIANTO EL. E100/E150** EQUIPEMENTS ÉLECTRIQUE *ELECTRIC SYSTEM EQUIP.* ELEKTRISCHE ANLAGE

| | Codice | Denominazione | Denomination | *Denomination* | Bezeichnung | E100 | E100A | E150 | E150A |
|---|---|---|---|---|---|---|---|---|---|
| **1** | PACP800011 | **Tubo acqua fredda** | Tube de l'eau Froide | *Cold water pipe* | Kaltwasserleitung | ● | ● | ● | ● |
| **2** | PACP800012 | **Tubo acqua calda** | Tube de l'eau chaude | *Hot water pipe* | Warmwasserleitung | ● | ● | ● | ● |
| **3** | PTCP800081 | **Controdado 1/2''** | Contre écrou 1/2'' | *Lock nut 1/2''* | Gegenmutter 1/2'' | ● | ● | ● | ● |
| **4** | RTBF800126 | **Raccordo** | Raccord | *Connection* | Anschlusstück | ● | ● | ● | ● |
| **5** | RTCU900012 | **Bicono per tubo Ø 10** | Bicone pour tube Ø 10 | *Bicone for pipe Ø 10* | Zweikegel Ø 10 | ● | ● | ● | ● |
| **6** | RTCP900013 | **Calotta per tubo Ø 10** | Ecrou pour tube Ø 10 | *Nut for pipe Ø 10* | Mutter für Schlauch Ø 10 | ● | ● | ● | ● |
| **7** | PACP800024 | **Tubo carico acqua** | Tube distribution eau | *Water feeding pipe* | Hahnversorgunsrohr | ● | ● | ● | ● |
| **8** | RTCU900132 | **Niples 1/2'' - 3/8''** | Niples 1/2'' - 3/8'' | *Niples 1/2'' - 3/8''* | Nippel 1/2'' - 3/8'' | ● | ● | ● | ● |
| **9** | GABF800035 | **Attacco acqua** | Attaque de l'eau | *Water connection* | Wasseranschluss | ● | ● | ● | ● |
| **10** | RTCP800018 | **Rubinetto acqua completo** | Robinet de l'eau | *Water tap* | Wasserhahn | ● | ● | ● | ● |
| **11** | RTBF900045 | **Morsettiera 6 poli** | Groupe de conn. des cables 6 pôles | *Terminal bloc 6 poles* | Klemmenbreit 6 Polig | ● | ● | ● | ● |
| **12** | RTCP900050 | **Resistenza 1800 W 240 V** | Résistance 1800 W 240 V | *Element 1800 W 240 V* | Elektr. Widerstand 1800 W 240 V | ● | ● | ● | ● |
| **13** | RTCP800104 | **Manopola commutatore** | Bouton du commutateur | *Commutator knob* | Kommutatorkugelgriff | ● | ● | ● | ● |
| **14** | RTCP900036 | **Commutatore** | Commutateur | *Commutator* | Kommutator | ● | ● | ● | ● |
| **15** | RTCU900290 | **Lampada spia verde** | Lampe témoin verte | *Green warning light* | Grüne Kontrolleuchtenbirne | ● | ● | ● | ● |
| **16** | RTCP800024 | **Erogatore** | Distributer | *Distributor* | Wasserversorger | ● | ● | ● | ● |
| **17** | RTCU700197 | **Raccordo a T 1/2''** | Raccord 1/2'' | *Connection 1/2''* | Anschlusstück T 1/2'' | ● | ● | ● | ● |