DESPIECE TECNICO / SPARE PARTS BOM

Barbacoa a gas
Gas charcoal grills
Charcoal á gaz
Gas lavastein grills
Griglie pietra lavica a gas
Grelhadores de pedra lávica

GAMA 700 RANGE

Modelos / Models:

BG7-05
BG7-10
BG7-05 I
BG7-10 I

Junio 2008 june

Revisado Mayo 2014 May Revised

FAGOR

FAGOR INDUSTRIAL

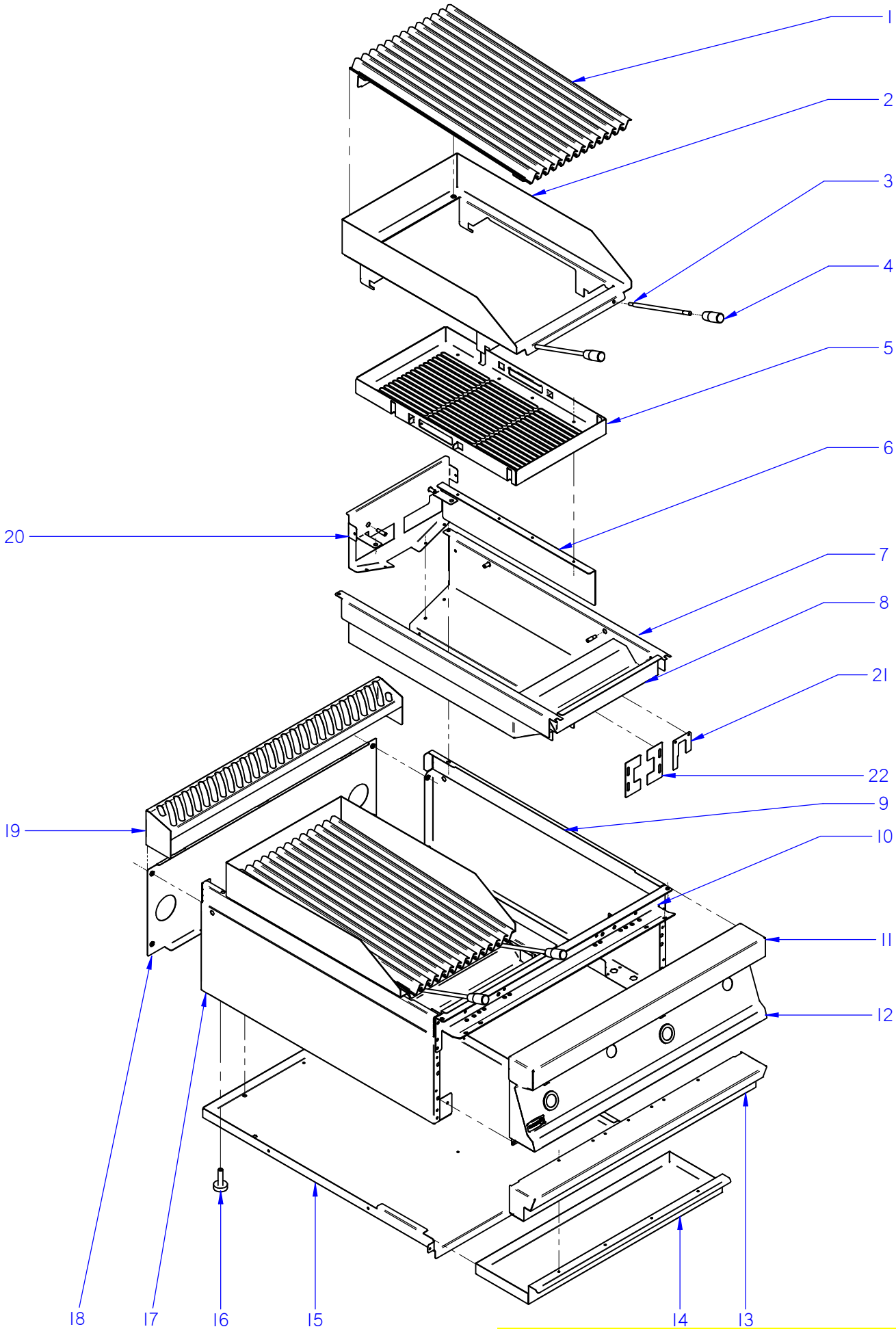

ITEM MARCADO EN COLOR = REPUESTO RECOMENDADO
COLOURED ITEM = RECOMMENDED SPARE PART

N plano / Drawing N.	Firma / Signature	Fecha / Date	Aparato / Appliance	MUEBLE / CABINET	Lamina / Sheet	
C-2080		2008-06	BARBACOA BG7-05 / BG7-10		1	Fagor Industrial S.Coop. FAGOR Onate

APARATO / APPLIANCE	BARBACOA / BARBECUE	ZONA / ZONE	MUEBLE / CABINET	PLANO DRAWING	C-2080

ITEM	CODIGO REFERENCE	DENOMINACION	DENOMINATION	BG7-05	BG7-10	BG7-05 I	BG7-10 I					ELIMINADO ELIMINATED	INTRODUCIDO INTRODUCED	NOTAS / NOTES
1	T035464000	PARRILLA DE FUNDICION G700	CAST IRON GRILLE G700	1	2	_	_							
1	H125407000	PARRILLA DE INOXIDABLE G700	STAINLESS STEEL GRILLE G700	_	_	1	2							
2	H125416000	CONJUNTO SOPORTE PARRILLA	GRILLE SUPPORT UNIT	1	2	1	2					20.09.10		
2	H125414000	SOPORTE PARRILLA	GRILLE UNIT	1	2	1	2					11.11.13		
2	12097008	SOPOR. BARBACOA G700 COMP.	COMPL. BARBECUE SUPPORT	1	2	1	2						11.11.13	
	Q221342000	REMACHE EXAGONAL M5	HEXAGONAL RIVET M5	1	2	1	2							
	Q152004000	TORNILLO APLAST. M5X13 A 304	MUSHROOM HEAD BOLT M5X13	1	2	1	2							
	Q151336000	TORNILLO SOPORTE GUIAS	GUIDE SUPPORT BOLT	4	8	4	8							
3	H125417000	ASA BARBACOA 750 Q	BARBECUE HANDLE 750 Q	2	4	2	4							
	Q162040000	TUERCA EXAGONAL M6	HEXAGONAL NUT M6	4	8	4	8							
4	T065460000	EMPUÑADURA	HANDLE	2	4	2	4							
5	H122605000	REJILLA INOX. COMPLETA G.700	COMPLETE INOX. GRILLE G.700	1	2	1	2							
	Q412002000	REMACHE AVINOX Ø4X10MM	RIVET AVINOX Ø4x10MM	8	16	8	16							
6	H122614000	LATERAL CAJA	SIDE BOX	2	4	2	4							
7	H122603000	CAJA INTERIOR COMPLETA	COMPLETE INTERIOR BOX	1	2	1	2							
	Q412002000	REMACHE AVINOX Ø4X10MM	RIVET AVINOX Ø4x10MM	4	8	4	8							
	H125418000	TORNILLO SIST. ELEVACION	ELEVATION SYST. BOLT	4	8	4	8							
	N100322000	COJINETE AUTOLUBRICADO	SELF LUBRICATED BEARING	4	8	4	8							
8	H122602000	ANTERIOR INTERIOR MESA	FRONT INTERIOR BENCH	1	2	1	2							
9	H122802000	PANEL LAT. SUP. DCHO. G700	RIGHT SUP. SIDE PANEL G700	1	1	1	1							
	Q221342000	REMACHE EXAGONAL M5	HEXAGONAL RIVET M5	5	5	5	5							
	Q221343000	REMACHE EXAGONAL M6	HEXAGONAL RIVET M6	5	5	5	5							
	X010503000	CIERRE MUELLE	LOCK SPRING	1	1	1	1							
10	H602602000	ESCUADRA AMARRE ANTER. 1/2 M	FRONT FASTEN. BRACKET 1/2 M	1	_	1	_							
10	H602603000	ESCUADRA AMARRE ANTER. 1 M	FRONT FASTENING BRACKET 1 I	_	1	_	1							
	Q221342000	REMACHE EXAGONAL M5	HEXAGONAL RIVET M5	6	6	6	6							
11	H125403000	ANTERIOR MESA 1/2 M G-700	FRONT BENCH 1/2M G-700	1	_	1	_							
11	H125409000	ANTERIOR MESA 1 M G-700	FRONT BENCH 1M G-700	_	1	_	1							
	Q152004000	TORNI. APLASTADO M5X13 A 304	FLAT HEAD SCREW M5x13 A304	2	2	2	2							

APARATO / APPLIANCE	BARBACOA / BARBECUE	ZONA / ZONE	MUEBLE / CABINET	PLANO DRAWING	C-2080

ITEM	CODIGO REFERENCE	DENOMINACION	DENOMINATION	BG7-05	BG7-10	BG7-05 I	BG7-10 I					ELIMINADO ELIMINATED	INTRODUCIDO INTRODUCED	NOTAS / NOTES
12	H122803000	PANEL PORTAMANDOS BG7-05Q	CTRL. HOLDER PANEL BG7-05Q	1	_	1	_							
12	H122807000	PANEL PORTAMANDOS BG7-10Q	CTRL. HOLDER PANEL BG7-10Q	_	1	_	1							
	Q152004000	TORNIL. APLASTADO M5X13 A 304	FLAT HEAD. SCRW M5x13 A304	4	4	4	4							
	Q221343000	REMACHE EXAGONAL M6	HEXAGONAL RIVET M6	2	2	2	2							
	U912805000	ESCUDO FAGOR G700	FAGOR EMBLEM G700	1	1	1	1							
	Q221023000	CLIP SUJECIÓN RÁPIDA Ø5	RAPID CONNECT CLIP Ø5	2	2	2	2							
13	H122815000	ZOCALO ASA 1/2 MÓDULO	SKIRTING ASA 1/2 MODULE	1	_	1	_							
13	H122805000	ZOCALO ASA 1 MÓDULO	SKIRTING ASA 1 MODULE	_	1	_	1							
	Q012031000	TORNILLO EXAGONAL M5X10 A.30	HEXAGONAL BOLT M5X10 A.304	2	2	2	2							
	Q302022000	ARANDELA 16X6X1.2 A.304	WASHER 16X6X1.2 A.304	2	2	2	2							
14	H122608000	BANDEJA RECOGEGRASAS	GREASE COLLECTION TRAY	1	_	1	_							
14	H120301000	BANDEJA RECOGEGRASAS	GREASE COLLECTION TRAY	_	1	_	1							
15	H122607000	BASE	BASE	1	_	1	_							
15	H122606000	BASE	BASE	_	1	_	1							
	Q419005000	REMACHE 4X8 ALMG3 / ALUMINIO	RIVET 4X8 ALMG3 / ALUMINIUM	4	4	4	4					13.01.14		
	12010138	REMACHE INOX 4X7,50MM	RIVET 4X7,50 / S.STEEL	4	4	4	4						13.01.14	
	Q221342000	REMACHE EXAGONAL M5	HEXAGONAL RIVET M5	1	3	1	3							
16	Z200107000	PATA REGULABLE	ADJUSTABLE LEG	4	4	4	4							
	Q221345000	REMACHE EXAGONAL M10	HEXAGONAL RIVET M10	4	4	4	4							
17	H122801000	PANEL LATERAL SUP. IZDO. G700	LEFT UPPER SIDE PANEL G700	1	1	1	1							
	Q221342000	REMACHE EXAGONAL M5	HEXAGONAL RIVET M5	5	5	5	5							
	Q221343000	REMACHE EXAGONAL M6	HEXAGONAL RIVET M6	5	5	5	5							
	X010503000	CIERRE MUELLE	LOCK SPRING	1	1	1	1							
	Q221343000	REMACHE EXAGONAL M6	HEXAGONAL RIVET M6	5	5	5	5							
18	H602804000	PANEL POSTERI. SUP. G700 1/2M	SUP. REAR PANEL G700 1/2M	1	_	1	_							
18	H602808000	PANEL POSTERIOR SUP. G700 1M	SUP REAR PANEL G700 1M	_	1	_	1							
	Q419005000	REMACHE 4X8 ALMG3 / ALUMINIO	RIVET 4X8 ALMG3 / ALUMINIUM	4	4	4	4					13.01.14		
	12010138	REMACHE INOX 4X7,50MM	RIVET 4X7,50 / S.STEEL	4	4	4	4						13.01.14	
	X010503000	CIERRE MUELLE	LOCK SPRING	3	3	3	3							
	Q419007000	REMACHE TUBULAR C/V D3.2X6	TUBULAR RIVET C/V D3.2X6	6	6	6	6							

APARATO / APPLIANCE	BARBACOA / BARBECUE	ZONA / ZONE	MUEBLE / CABINET	PLANO DRAWING	C-2080

ITEM	CODIGO REFERENCE	DENOMINACION	DENOMINATION	BG7-05	BG7-10	BG7-05 I	BG7-10 I					ELIMINADO ELIMINATED	INTRODUCIDO INTRODUCED	NOTAS / NOTES
19	H125404000	EMBELLECEDOR POSTER. 1/2 M	REAR TRIM. 1/2 M	1	_	1	_							
19	S565401000	EMBELLECEDOR POSTERIOR 1M	REAR TRIM 1M	_	1	_	1							
20	H122604000	POSTERIOR INT. MESA 1/2M	REAR INTERIOR BENCH 1/2M	1	2	1	2							
	Q221342000	REMACHE EXAGONAL M5	HEXAGONAL RIVET M5	2	4	2	4							
	Q221343000	REMACHE EXAGONAL M6	HEXAGONAL RIVET M6	2	4	2	4							
21	12049720	PROTECCIÓN PILOTO	SWITCH PROTECTION	1	2	1	2						13.05.13	
22	12049721	PROTECCIÓN QUEMADOR	BURNER PROTECTION	2	4	2	4						13.05.13	

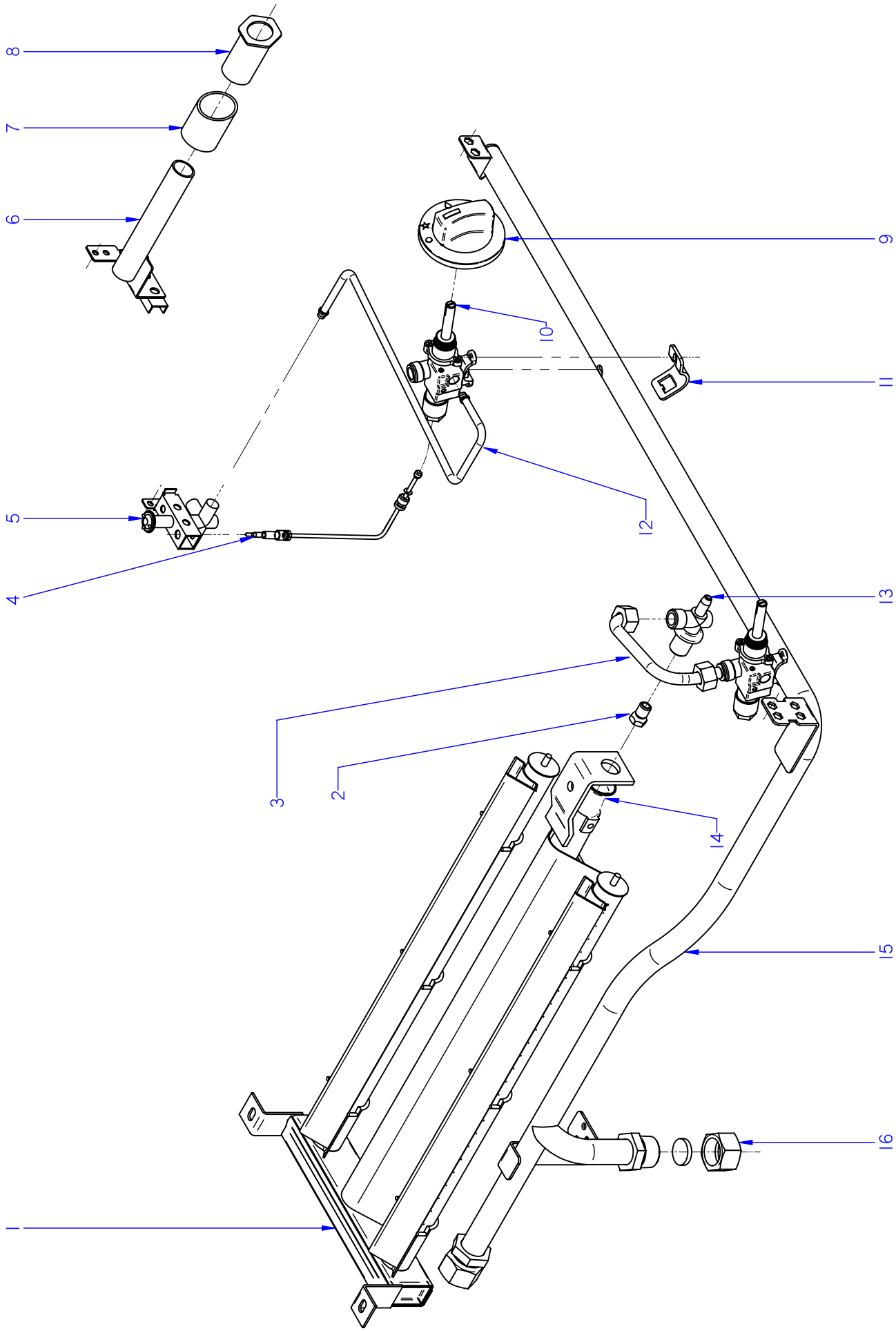

ITEM MARCADO EN COLOR = REPUESTO RECOMENDADO
COLOURED ITEM = RECOMMENDED SPARE PART

N plano	Firma	Fecha	Aparato	Lamina	
C-2081		2008-06	PARTE FUNCIONAL BARBACOA BG7-05 / BG7-10	2	Fagor Industrial S.Coop. Oñate

APARATO / APPLIANCE	BARBACOA / BARBECUE	ZONA / ZONE	PARTE FUNCIONAL / FUNCTIONAL PART	PLANO DRAWING	C-2081

ITEM	CODIGO REFERENCE	DENOMINACION	DENOMINATION	BG7-05	BG7-10							ELIMINADO ELIMINATED	INTRODUCIDO INTRODUCED	NOTAS / NOTES
1	T035702000	QUEMADOR BARBACOA 700	BARBECUE BURNER 700	1	2									
	Q012031000	TORN. HEXAGONAL M5X10 A.304	HEXAGONAL BOLT M5X10 A.304	2	4									
	Q302022000	ARANDELA Ø16X6X1.2 A.304	WASHER 16X6X1.2 A.304	2	4									
2	O631000000	TOBERA DE Ø 1,40 B.P.	NOZZLE Ø 1.40 B.P.	1	2									
2	U112402000	TOBERA DE Ø 2,10 G.N.	NOZZLE Ø 2.10 G.N.	1	2									
3	H125009000	CONDUCCION QUEMADOR COMP.	COMP. BURNER PIPE	1	2									
4	U222130000	TERMOPAR L=600	THERMOCOUPLE L=600	1	2									
5	U322118000	PILOTO COMPLETO 100.062	COMPLETE PILOT LIGHT 100.062	1	2									
	U442137000	INYECTOR Ø 0.4 GN	INJECTOR Ø 0.4 GN.	1	2									
6	H122814000	TUBO ENCENDIDO COMPLETO	COMPLETE IGNITION PIPE	1	2							07.05.12		
6	12045111	TUBO ENCEND.+ESCUAD.PILOTO	PILOT BRACKET+IGNITION PIPE	1	2								07.05.12	
	Q306027000	ARANDELA PLANA 33.8X27X1.5	FLAT WASHER 33.8X27X1.5	1	2									
	Q221324000	TUERCA 3/4 GAS	NUT 3/4 GAS	1	2									
7	R065025000	DISTANCIADOR	SPACER	1	2									
8	R042822000	EMBELLECEDOR TUBO ENCEND.	IGNITION PIPE TRIM	1	2									
9	H122101000	BOTON DE MANDO D8 G700	CONTROL BUTTON Ø8 G700	1	2									
10	H122103000	GRIFO 18700 BY-PASS 1,1	TAP 18700 BY-PASS 1.1	1	2									
11	U912104000	BRIDA AMARRE GRIFO 1/2"	TAP FASTENING FLANGE 1/2"	1	2									
	Q122032000	TORNILLO ALLEN M.5x15	ALLEN HEAD SCREW M.5x15	2	4									
12	H125013000	TUBO PILOTO BG 750 Q	PILOT PIPE BG 750 Q	1	2							01.07.13		
12	12092775	TUBO PILOTO BG 750 Q	PILOT PIPE BG 750 Q	1	2								01.07.13	
	12008715	RACORD BICONO 6 958.031	DOUBLE-CONE CONNECTION	1	2								01.07.13	
13	U915014000	PORTATOBERAS	NOZZLE HOLDER	1	2							11.04.11		
13	U265033000	PORTATOBERAS Ø10	NOZZLE HOLDER Ø10	1	2								11.04.11	
	Q153002000	TORNILLO TAPON	CAP BOLT	1	2									
	Q306062000	ARANDELA Ø13,9X10,33x1,5	WASHER Ø13.9X10.33x1.5	2	4									
14	U325707000	REGULADOR DE AIRE	AIR REGULATOR	1	2									
15	H125002000	DISTRIBUIDOR GENERAL COMPL.	COMP. GENERAL DISTRIBUTOR	1	_									
15	H125006000	DISTRIBUIDOR GENERAL COMPL.	COMP. GENERAL DISTRIBUTOR	_	1									
16	U635008000	TUERCA CIEGA 3/4	BLIND NUT 3/4	1	1									
	Q306051000	ARANDELA TAPON D 23.5x3	CAP WASHER Ø 23.5x3	1	1									

APARATO / APPLIANCE	BARBACOA / BARBECUE	ZONA / ZONE	VARIOS / VARIOUS	PLANO DRAWING	

ITEM	CODIGO REFERENCE	DENOMINACION	DENOMINATION	BG7-05	BG7-10	BG7-05 A	BG7-10 A					ELIMINADO ELIMINATED	INTRODUCIDO INTRODUCED	NOTAS / NOTES
	H016502000	FOLLETO DE INSTRUCCIONES BG	INSTRUCTION LEAFLET BG	1	1	_	_					14.05.09		
	H016518000	FOLLETO DE INSTRUCCIONES BG	INSTRUCTION LEAFLET BG	1	1	_	_						14.05.09	
	H016515000	FOLLETO DE INSTRUCCION. BG-A	INSTRUCTION LEAFLET BG-A	_	_	1	1							
	T056502000	CARBON VOLCANICO (BOLSA)	VOLCANIC ROCK CHARCOAL	1	1	1	1							

APARATO / APPLIANCE	BARBACOA / BARBECUE	ZONA / ZONE	PIEZAS ESPECIFICAS PARA LOS DISTINTOS GASES / SPECIFIC PARTS FOR DIFFERENT GASSES	PLANO DRAWING	C-2081

ITEM	CODIGO REFERENCE	DENOMINACION	DENOMINATION	BG7-05	BG7-10							ELIMINADO ELIMINATED	INTRODUCIDO INTRODUCED	NOTAS / NOTES
		BUTANO PROPANO	**BUTANE PROPANE**											
2	O631000000	TOBERA DE Ø 1,40 B.P.	NOZZLE Ø 1.40 B.P.	1	2									
S/Nº	U136501000	INDICADOR BUTANO-PROPANO	INDICATOR BUTANE-PROPANE	1	1									
		GAS NATURAL	**NATURAL GAS**											
5	U442137000	INYECTOR Ø 0.4 GN	INJECTOR Ø 0.4 GN.	1	2									
2	U112402000	TOBERA DE Ø 2,10 G.N.	NOZZLE Ø 2.10 G.N.	1	2									
S/Nº	U134402000	INDICADOR GAS-NATURAL	INDICATOR GAS-NATURAL	1	1									
		GAS VILLA	**TOWN GAS**											
2	U842400000	TOBERA DE Ø 4,40 G.V.	NOZZLE Ø 4.40 G.V.	1	2									
S/Nº	U134310000	INDICADOR GAS-VILLA	INDICATOR TOWN -GAS	1	1									

APARATO / APPLIANCE	BARBACOA / BARBECUE	ZONA / ZONE	PIEZAS ESPECIFICAS PARA LA VERSION AUSTRALIA / SPECIFIC PARTS FOR THE AUSTRALIAN VERSION	PLANO DRAWING	C-2080-81

ITEM	CODIGO REFERENCE	DENOMINACION	DENOMINATION	BG7-05 A	BG7-10 A							ELIMINADO ELIMINATED	INTRODUCIDO INTRODUCED	NOTAS / NOTES
		PIEZAS QUE SE ELIMINAN	**PARTS WHICH HAVE BEEN SUPP**											
12	H122803000	PANEL PORTAMANDOS BG7-05Q	CTRL. HOLDER PANEL BG7-05Q	1	_									PLANO C-2080
12	H122807000	PANEL PORTAMANDOS BG7-10Q	CTRL. HOLDER PANEL BG7-10Q	_	1									PLANO C-2080
2	U112402000	TOBERA DE Ø 2,10 G.N.	NOZZLE Ø 2.10 G.N.	1	2									PLANO C-2081
		PIEZAS QUE SE INTRODUCEN	**PARTS WHICH HAVE BEEN INTR**											
12	H122818000	PANEL PORTAMANDOS BG7-05 A	CTRL. HOLDER PANEL BG7-05 A	1	_									PLANO C-2080
12	H122820000	PANEL PORTAMANDOS BG7-10 A	CTRL. HOLDER PANEL BG7-10 A	_	1									PLANO C-2080
2	S202401000	TOBERA DE Ø 2,60	NOZZLE Ø 2.60	1	2									PLANO C-2081
S/Nº	S113034000	PIEZOELECTRICO	PIEZOELECTRIC	1	2									
S/Nº	X022131000	BUJIA	SPARK PLUG	1	2									
S/Nº	R613030000	CABLE BUJIA	SPARK PLUG CABLE	1	2									
S/Nº	U333003000	CABLE MASA ENCENDEDOR	LIGHTER EARTH CABLE	1	2									

APARATO / APPLIANCE	BARBACOA / BARBECUE	ZONA / ZONE	REPUESTOS RECOMENDADOS / RECOMMENDED SPARE PARTS	PLANO DRAWING	

ITEM	CODIGO REFERENCE	DENOMINACION	DENOMINATION	BG7-05	BG7-10							ELIMINADO ELIMINATED	INTRODUCIDO INTRODUCED	NOTAS / NOTES
4	U222130000	TERMOPAR L=600	THERMOCOUPLE L=600	1	2									C-2081
5	U322118000	PILOTO COMPLETO 100.062	COMPLETE PILOT LIGHT 100.062	1	2									C-2081
	U442137000	INYECTOR Ø 0.4 GN	INJECTOR Ø 0.4 GN.	1	2									C-2081
10	H122103000	GRIFO 18700 BY-PASS 1,1	TAP 18700 BY-PASS 1.1	1	2									C-2081