SV 185-265

Electronic modular cuber

Spare parts list
Catalogo ricambi
Catalogues pièces détacheés

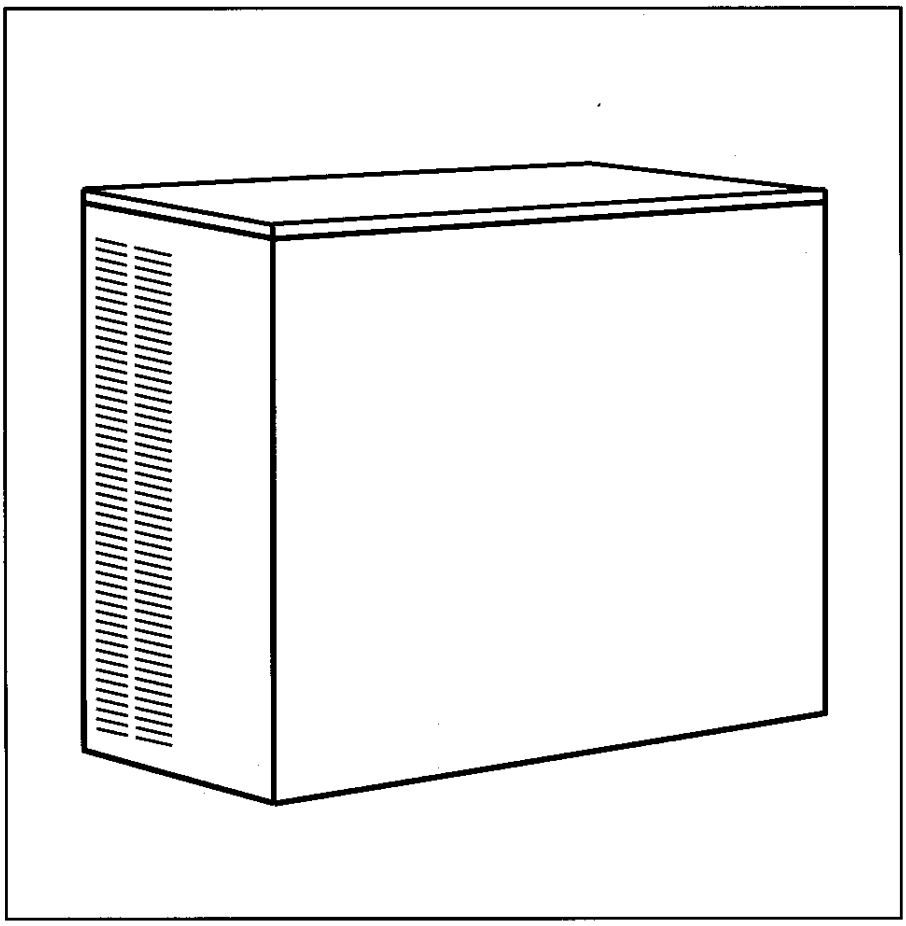

SIMAG

090090.02 REV. 11/93

SV 185 - SV 265 - COMPRESSOR CHART - LISTA COMPRESSORI
LISTE DES COMPRESSUERS - KOMPRESSORENLISTE

Model Modello Modele Modell	Volts Voltaggio Tension Spannung	Compressor model Modello compressore Type du compresseur Kompressor type	Compressor assy Ass. Compressore Ens. compresseur Kompressor Kompl	Compressor only Solo compressore Compresseur seul Nur Kompressor	Relay Relè Relais Relais	Protector Protettore Protecteur Schutzgerat	Start capacitor Capacità d'avv. Capacité demarr. Start Kondensator	Run capacitor Capacità di marcia Capacité permanent Betrieb Kondensator	Autotransformer Autotrasformatore Autotransformateur Autotrafo
SV 185	115/60/1	-	-	-	-	-	-	-	-
SV 265	115/60/1	-	-	-	-	-	-	-	-
SV 185	220/60/1	U.H. CAJ 4511A	19169443/0	-	-	-	-	-	-
SV 265	220/60/1	Copeland CRA1-0150-PFV	19166024/0	-	-	-	-	-	-
SV 185	220/50/1	U.H. S 26 TN	19165481/0	-	19621677/0	19560163/0	19180567/0	19180569/0	-
SV 265	220/50/1	U.H. A.H 5522E	19165519/0	-	19621653	-	19180567/0	19180564/0	-

SV 185 - SV 260 - ELECTRIC COMPONENT CHART - LISTA COMPONENTI ELETTRICI
LISTE DES COMPOSANTS ELECTRIQUES - ELEKTRISCHER TEILLISTE

Model Modello Modele Modell	Volts Voltaggio Tension Spannung	Contactor Teleruttore Contacteurr Magnetschalter	Electronic contr. board Scheda elettronica Carte electronique. Steuer Karte	Water drain valve Valvola scar. acqua V.E.M. vidange eau W/Abflussventil	Hot gas valve Valvola gas caldo V.E.M. gax chauds Heiss gaz Ventil	Watr pump assyr Ass. pompa Ens. pompe a eau Wasser Pumpe	Fan motor assy Ass. motoventilatore Ens. motoventilateur Lufter Motor Kmpl.
SV 185 SV 265	115/60/1	-	-	-	-	-	-
SV 185 SV 265	220/60/1	33730617/0	33580043/0	19865525/0	19863034/0	793113.11	18562058/0
SV 185 SV 265	220/50/1	33730617/0	33580043/0	1965525/0	19863034/0	793113.09	18562058/0

GRUPPO CARROZZERIA
CABINET
GROUP CARROSSERIE

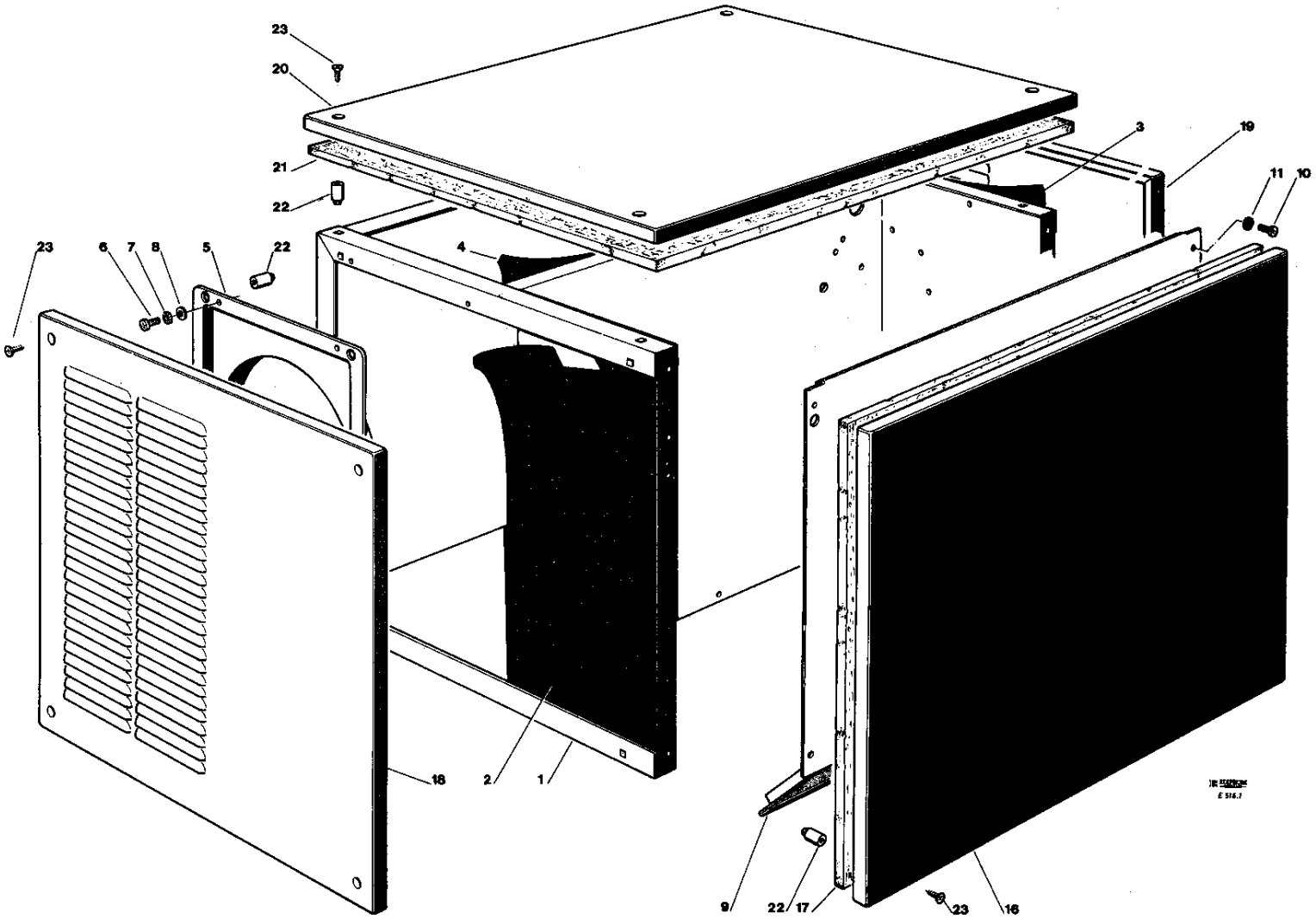

Pos. Nr.	Codice Code	Descrizione	Description	Description	Quantità Q.ty Q.tè
1	81453000/0	ASSIEME TELAIO SV 185	FRAME ASS'Y SV 185	ENSEMBLE CHASSIS SV 185	1
1A	81453065/0	ASSIEME TELAIO SV 265	FRAME ASS'Y SV 265	ENSEMBLE CHASSIS SV 265	1
2	25550037/0	PANNELLO ISOLANTE SX	LEFT INSULATION PANEL	GAUCHE PANNEAU ISOLANT	1
3	25550038/0	PANNELLO ISOLANTE DX	RIGHT INSULATOR PANEL	DROITE PANNEAU ISOLANT	1
4	25550036/0	PANNELLO ISOLANTE	INSULATOR PANEL	PANNEAU ISOLANT	1
5	25168758/0	CONVOGLIATORE SV 185	CONVEYOR SV 185	CONVOYEUR SV 185	2
5A	25168768/0	CONVOGLIATORE SV 265	CONVEYOR SV 265	CONVOYEUR SV 265	2
6	12768410/0	VITE	SCREW	VIS	8
7	12540730/0	ROSETTA	WASHER	RONDELLE	8
8	12521530/0	RONDELLA	WASHER	RONDELLE	8
9	81453112/0	CONVOGLIATORE	CONVEYOR	CONVEYEUR	1
10	12726405/0	VITE	SCREW	VIS	4
11	12540730/0	ROSETTA	WASHER	RONDELLE	4
16	25550578/0	PANNELLO ANT. SV 185 INOX	FRONT PANEL SV 185 INOX	PANNEAU FRONTAL SV 185 INOX	1
16A	25550579/0	PANNELLO ANT. SV 265 INOX	FRONT PANEL SV 265 INOX	PANNEAU FRONTAL SV 265 INOX	1
17	25550576/0	PANNELLO ISOLANTE SV 185	INSULATOR PANEL SV 185	PANNEAU ISOLANT SV 185	1
17A	25550577/0	PANNELLO ISOLANTE SV 265	INSULATOR PANEL SV 265	PANNEAU ISOLANT SV 265	1
18	25330593/0	FIANCO SINISTRO INOX SV 185	LEFT SIDE SV 185 INOX	PANNEAU GAUCHE SV 185 INOX	1
18A	25330603/0	FIANCO SINISTRO INOX SV 265	LEFT SIDE INOX SV 265	PANNEAU GAUCHE INOX SV 185	1
19	25330591/0	FIANCO DESTRO INOX SV 185	RIGHT SIDE INOX SV 185	PANNEAU DROITE INOX SV 185	1
19A	25330601/0	FIANCO DESTRO INOX SV 265	RIGHT SIDE INOX SV 265	PANNEAU DROITE INOX SV 265	1
20	25160501/0	COPERCHIO INOX	INOX COVER	COUVERCLE INOX	1
21	25550043/0	PANNELLO ISOLANTE	INSULATOR PANEL	PANNEAU ISOLANT	1
22	19356001/0	MADREVITE	SCREW	VIS MERE	20
23	12727965/0	VITE	SCREW	VIS	20
-	670007.01	TUBO ALIMENTAZIONE ACQUA	WATER INLET TUBE	TUYAU ENTREE EAU	1
-	81409125/0	FILTRO ENTRATA ACQUA	WATER FILTER	FILTRE ENTREE EAU	1
-	650563.02	TUBO SCARICO ACQUA	DRAIN WATER	TUYAU DE DECHARGE EAU	1
-	02.0540.00.	PALETTA RACCOGLI GHIACCIO	ICE SCOOP	PELLE A GLACE	1

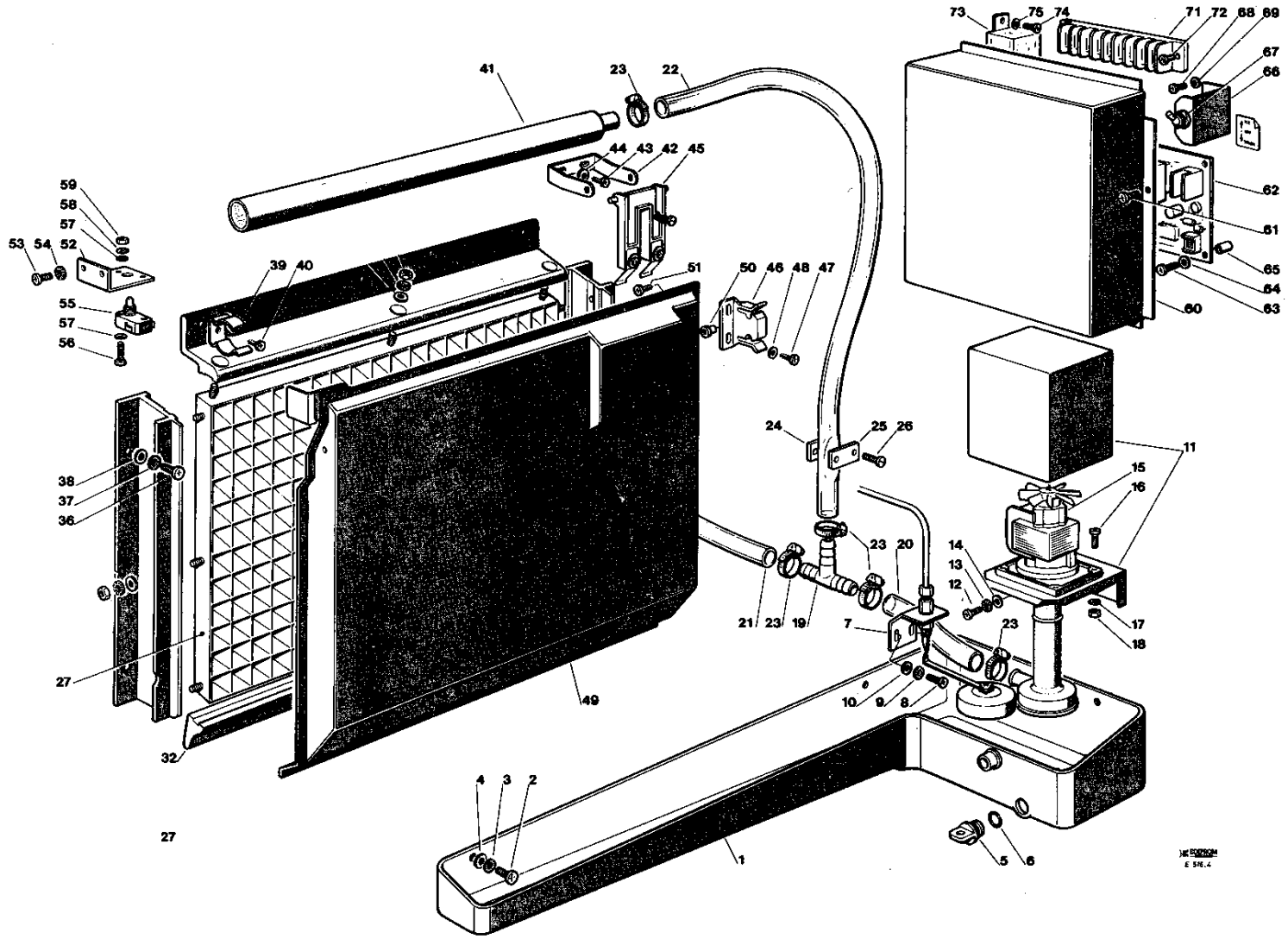
73
75
74
71
72
68
69
67
66
62
61
65
64
63
60
41
23
22
44
43
42
45
59
58
57
52
53
54
39
40
51
50
46
48
47
55
57
56
24
25
26
11
15
16
38
37
36
23
20
14
13
12
21
23
19
7
17
18
27
49
10
9
8
32
4
3
2
1
5
6
27

Pos. Nr.	Codice Code	Descrizione	Description	Description	Quantità Q.ty Q.tè
1	81453010/0	VASCHETTA ACQUA	WATER PAN	CUVET EAU	1
2	12768410/0	VITE	SCREW	VIS	3
4	12521530/0	RONDELLA	WASHER	RONDELLE	3
5	42062035/0	TAPPO SCARICO			1
6	41020448/0	ANELLO TENUTA	ORING	GARNITURE	1
7	02,2217.02	VALVOLA GALLEGGIANTE	FLOATING COCK	VANNE A FLOTTEUR	1
7A	25726491/0	SUPPORTO VALVOLA	SUPPORT	SUPPORT	1
8	12726405/0	VITE	SCREW	VIS	2
10	12521530/0	RONDELLA	WASHER	RONDELLE	2
11	81453101/0	SUPPORTO POMPA	SUPPORT	SUPPORT	1
12	12726405/0	VITE	SCREW	VIS	2
14	12521530/0	RONDELLA	WASHER	RONDELLE	2
15	793113.09	POMPA RICICLO ACQUA	PUMP	POMPE	1
16	12768410/0	VITE	SCREW	VIS	2
17	12540730/0	ROSETTA	WASHER	RONDELLE	2
18	12290805/0	DADO	NUT	ECROU	1
19	19612502/0	RACCORDO A T	RACCORD	RACCORT	1
20	25790857/0	TUBO ACQUA	WATER TUBE	TUYEAU EAU	1
21	25790856/0	TUBO ACQUA	WATER TUBE	TUYEAU EAU	1
22	25790832/0	TUBO ACQUA SV 185	WATER TUBE SV 185	TUYEAU SV 185	1
22A	25790880/0	TUBO ACQUA SV 265	WATER TUBE SV 265	TUYEAU EAU SV 265	1
23	19280600/0	FASCETTA	CLAM	BANDE	5
24	25570410/0	PIASTRINA	PLATTE	PLAQUETTE	1
25	25570411/0	PIASTRINA	PLATTE	PLAQUETTE	1
26	19940100/0	VITE	SCREW	VIS	2
27	81453004/0	ASSIEME EVAPORATORE SV 185	EVAPORATOR ASS'Y SV 185	ENS. EVAPORATEUR SV 185	1
27A	81453069/0	ASSIEME EVAPORATORE SV 265	EVAPORATOR ASS'Y SV 265	ENS. EVAPORATEUR SV 265	1
36	12768410/0	VITE	SCREW	VIS	4
37	12540730/0	RONDELLA	WASHER	RONDELLE	1
38	12521530/0	RONDELLA	WASHER	RONDELLE	4
39	25474608/0	MOLLA	SPRING	RESSORT	2
40	12728106/0	VITE	SCREW	VIS	8
41	81453009/0	DISTRIBUTORE D'ACQUA	WATER DISTRIBUTOR	DISTRIBUTEUR D'EAU	1
42	25725450/0	SUPPORTO SENSORE	SENSOR SUPPORT	SUPPORT DE CAPTEUR	1
43	12728106/0	VITE	SCREW	VIS	2
44	12521530/0	RONDELLA	WASHER	RONDELLE	2
45	81453007/0	ASSIEME SENSORE	SENSOR ASS'Y	ENSEMBLE CAPTEUR	1
46	25726470/0	SUPPORTO	SUPPORT	SUPPORT	2
47	12728106/0	VITE	SCREW	VIS	2
48	12521530/0	RONDELLA	WASHER	RONDELLE	2
49	81453008/0	DEFLETTORE SV 185	DEFLECTOR SV 185	CONVOYEUR SV 185	1
49A	81453072/0	DEFLETTORE SV 265	DEFLECTOR SV 265	CONVOYEUR SV 265	2
50	25560133/0	PERNO	GUDGEON	PIVOT	2
51	12728101/0	VITE	SCREW	VIS	2
52	25725454/0	SUPPORTO	SUPPORT	SUPPORT	1
53	12726405/0	VITE	SCREW	VIS	2
54	12540730/0	ROSETTA	WASHER	RONDELLE	2
55	19410207/0	MICRO	MICRO	MICRO	1
56	12726056/0	VITE	SCREW	VIS	2
57	12521520/0	RONDELLA	WASHER	RONDELLE	4
58	12540720/0	ROSETTA	WASHER	RONDELLE	2
59	12290795/0	DADO	NUT	ECROU	2
60	25160502/0	COPERCHIO	COVER	COUVERCLE	1
61	12726405/0	VITE	SCREW	VIS	2
62	33580043/0	SCHEDA ELETTRONICA	CARD ELECTRONIC	FICHE ELECTRONIQUE	1
63	12726408/0	VITE	SCREW	VIS	4
64	12521530/0	RONDELLA	WASHER	RONDELLE	4
65	33801000/0	DISTANZIALE	SPACER	ENTRETEOISE	4
66	25725456/0	SUPPORTO	SUPPORT	SUPPORT	1
67	33400027/0	INTERRUTTORE	SWITCH	INTERRUPTEUR	1
68	12726405/0	VITE	SCREW	VIS	2
71	33489251/0	MORSETTIERA	TERMINAL BOARD	BLOC DE RACCORDMENT	1
72	12726408/0	VITE	SCREW	VIS	2
73	33730609/0	TELERUTTORE	REMOTE CONTROL SWITCH	TELERUPTEUR	1
74	12726405/0	VITE	SCREW	VIS	1
75	12521530/0	RONDELLA	WASHER	RONDELLE	1

UNITÀ CONDENSATRICE
CONDENSING UNIT
UNITE DE CONDENSATION

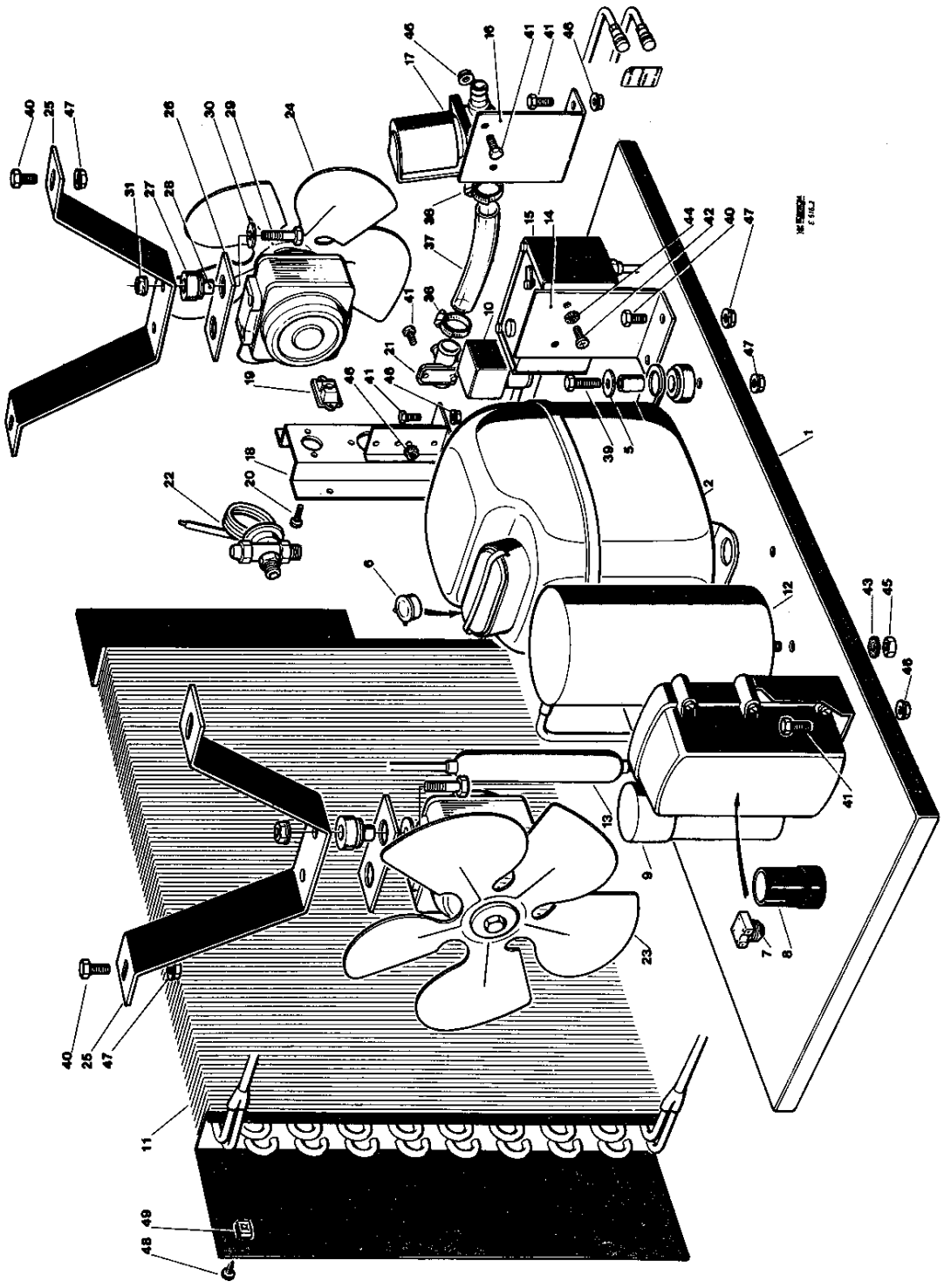

Pos. Nr.	Codice Code	Descrizione	Description	Description	Quantità Q.ty Q.tè
1	25110094/0	BASAMENTO SV 185	BASE SV 185	CHASSIS SV 185	1
1A	25110097/0	BASAMENTO SV 265	BASE SV 265	CHASSIS SV 265	1
2	19165481/0	COMPRESSORE SV 185	COMPRESSOR SV 185 TIPO S 26 TN	COMPRESSEUR SV 185	1
2A	19165519/0	COMPRESSORE SV 265	COMPRESSOR SV 265 TIPO AH 5522 E	COMPRESSEUR SV 265	1
5	12523050/0	RONDELLA	WASHER	RONDELLE	4
6	19560163/0	PROTETTORE PER SV 185	PROTECTION SV 185	PROTECTEUR SV 185	1
7	19621677/0	RELÈ PER SV 185	RELAY SV 185	RELAIS SV 185	2
7A	19621653/0	RELÈ PER SV 265	RELAY SV 265	RELAIS SV 265	2
8	19180567/0	CONDENSATORE DI SPUNTO PER SV 185	START CONDENSER SV 185	CONDENSATEUR DE DEMARRAGE SV 185	1
8A	19180567/0	CONDENSATORE DI SPUNTO PER SV 265	START CONDENSER SV 265	CONDENSATEUR DE DEMARRAGE SV 265	1
9	19180569/0	CONDENSATORE DI MARCIA PER SV 185	RUN CONDENSER SV 185	CONDENSATEUR DE MARCHE SV 185	1
9A	19180564/0	CONDENSATORE DI MARCIA PER SV 265	RUN CONDENSER SV 265	CONDENSATEUR DE MARCHE SV 265	1
10	19863034/0	VALVOLA GAS	GAS SOLENOIDE VALVE	VANNE DE GAZ	1
11	19177050/0	CONDENSATORE PER SV 185	CONDENSER SV 185	CONDENSEUR SV 185	1
11A	19177051/0	CONDENSATORE PER SV 265	CONDENSER SV 265	CONDENSEUR SV 265	1
12	19635339/0	RICEVITORE DI LIQUIDO	GAS ACCUMULATOR	BOUTEILE LIQUIDE	1
13	19301230/0	FILTRO DI RIDRATATORE	DRIER	FILTRE DESHYDRATEUR	1
14	25725437/0	SUPPORTO	SUPPORT	SUPPORT	1
15	19550610/0	PRESSOSTATO	PRESSURE CONTROL	PRESSOSTAT	1
16	25725457/0	SUPPORTO	SUPPORT	SUPPORT	1
17	19865525/0	ELETTROVALVOLA ACQUA	WATER SOLENOIDE VALVE	VANNE SOLENOIDE EAU	1
18	81453014/0	SUPPORTO ATTACCHI IDRICI	SUPPORT	SUPPORT	1
19	33320523/0	FISSACAVO	CLAMP	BANDE	1
20	12726404/0	VITE	SCREW	VIS	2
21	25690803/0	SCARICO	WATER DRAIN PIPE	ECOULEMENT EAU	1
22	19870622/0	VALVOLA AD ESPANSIONE SV 185	THERMOSTATIC VALVE SV 185	VANNE THERMOSTATIQUE SV 185	1
22A	19870626/0	VALVOLA AD ESPANSIONE SV 265	THERMOSTATIC VALVE SV 265	VANNE THERMOSTATIQUE SV 265	1
23-24	18562058/0	ELETTROVENTILATORE	FAN MOTOR	VENTILATEUR	2
25	25725455/0	SUPPORTO	SUPPORT	SUPPORT	2
26	25570190/0	PIASTRINA	PLATE	PLAQUETTE	2
27	19031000/0	AMMORTIZZATORE	SHOCK ABSORBER	AMORTISSEUR	4
28	19060306/0	BUSSOLA	BUSH	DOUILE	4
29	12792099/0	VITE	SCREW	VIS	4
30	12523050/0	RONDELLA	WASHER	RONDELLE	4
31	12292102/0	DADO	NUT	ECROU	4
37	25790826/0	TUBO ACQUA	WATER TUBE	TUYEAU	1
38	19281326/0	FASCETTA	CLAMP	BANDE	2
39	12792400/0	VITE	SCREW	VIS	4
40	12791000/0	VITE	SCREW	VIS	6
41	12788880/0	VITE	SCREW	VIS	9
42	12726389/0	VITE	SCREW	VIS	2
43	12540070/0	ROSETTA	WASHER	RONDELLE	1
44	12540020/0	ROSETTA	WASHER	RONDELLE	2
45	12295200/0	DADO	NUT	ECROU	1
46	12291600/0	DADO	NUT	ECROU	9
47	12292102/0	DADO	NUT	ECROU	10
48	12728106/0	VITE	SCREW	VIS	4
49	12436400/0	PIASTRINA	PLATTE	PLAQUETTE	4

UNITÀ CONDENSATRICE
CONDENSING UNIT
UNITE DE CONDENSATION

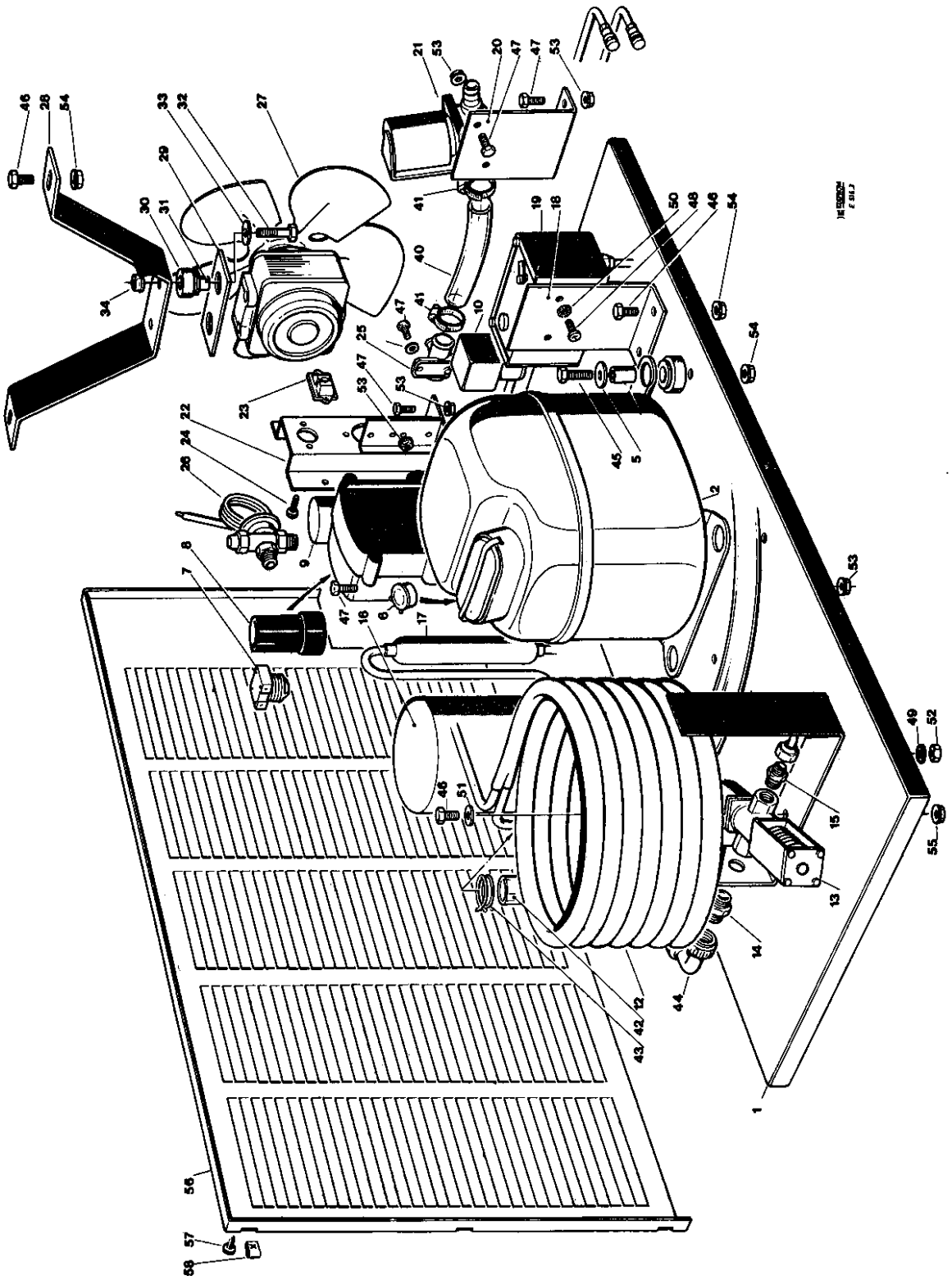

Pos. Nr.	Codice Code	Descrizione	Description	Description	Quantità Q.ty Q.tè
1	25110094/0	BASAMENTO SV 185	BASE SV 185	CHASSIS SV 185	1
1A	25110097/0	BASAMENTO SV 265	BASE SV 265	CHASSIS SV 265	1
2	19165481/0	COMPRESSORE U.H. TIPO S 26 TN PER SV 185	COMPRESSOR SV 185	COMPRESSEUR SV 185	1
2A	19165519/0	COMPRESSORE U.H. TIPO AH 5522 E PER SV 265	COMPRESSOR SV 260	COMPRESSEUR SV 260	1
5	12523050/0	RONDELLA	WASHER	RONDELLE	4
6	19560163/0	PROTETTORE PER SV 185	PROTECTION SV 185	PROTECTEUR SV 185	1
7	19621677/0	RELÈ PER SV 185	RELAY SV 185	RELAIS SV 185	2
7A	19621653/0	RELAY SV 265	RELAY SV 265	RELAIS SV 265	2
8	19180567/0	CONDENSATORE DI SPUNTO PER SV 185	START CONDENSER SV 185	CONDENSATEUR DE DEMARRAGE SV 185	1
9	19180569/0	CONDENSATORE DI MARCIA PER SV 185	RUN CONDENSER SV 185	CONDENSATEUR DE MARCHE SV 185	1
9A	19180564/0	CONDENSATORE DI MARCIA PER SV 265	RUN CONDENSER SV 265	CONDENSATEUR DE MARCHE SV 265	1
10	19863034/0	VALVOLA GAS	GAS SOLENOIDE VALVE	VANNE DE GAZ	1
12	81485038/0	CONDENSATORE SV 185	CONDENSER SV 185	CONDENSATEUR SV 185	1
12A	81453098/0	CONDENSATORE SV 265	CONDENSER SV 265	CONDENSATEUR SV 265	1
13	19865611/0	VALVOLA PRESSOSTATICA	AUTOMATIC WATER VALVE	VANNE PRESSOSTATIQUE	1
14	25631013/0	RACCORDO	PIPE FITTING	RACCORD	1
15	19320310/0	RACCORDO	PIPE FITTING	RACCORD	1
16	19635339/0	RICEVITORE DI LIQUIDO	GAS ACCUMULATOR	BOUTEILE LIQUIDE	1
17	19301230/0	FILTRO DISIDRATATORE	DRIER FILTRE	DESHYDRATEUR	1
18	25725437/0	SUPPORTO	SUPPORT	SUPPORT	1
19	19550615/0	PRESSOSTATO	PRESSURE CONTROL	PRESSOSTAT	1
20	25725457/0	SUPPORTO	SUPPORT	SUPPORT	1
21	19865525/0	ELETTROVALVOLA ACQUA	WATER SOLENOIDE VALVE	VANNE SOLENOIDE EAU	1
22	81453014/0	SUPPORTO	SUPPORT	SUPPORT	1
23	33320523/0	FISSACAVO	CLAMP	BANDE	1
24	12726404/0	VITE	SCREW	VIS	2
25	25690803/0	SCARICO	WATER DRAIN PIPE	ECOULEMENT EAU	1
26	19870622/0	VALVOLA AD ESPANSIONE SV 185	THERMOSTATIC VALVE SV 185	VANNE THERMOSTATIQUE SV 185	1
26A	19870626/0	VALVOLA AD ESPANSIONE SV 265	THERMOSTATIC VALVE SV 265	VANNE THERMOSTATIQUE SV 265	1
27	18562060/0	ELETTROVENTILATORE	FAN MOTOR	VENTILATEUR	1
28	25725455/0	SUPPORTO	SUPPORT	SUPPORT	1
29	25570190/0	PIASTRINA	PLATE	PLAQUETTE	1
30	19031000/0	AMMORTIZZATORE	SHOCK ABSORBER	AMORTISSEUR	2
31	19060306/0	BUSSOLA	BUSH	DOUILE	2
32	12792099/0	VITE	SCREW	VIS	2
33	12523050/0	RONDELLE	WASHER	RONDELLE	2
34	12292102/0	DADO	NUT	ECROU	2
40	25790855/0	TUBO ACQUA	WATER TUBE	TUYEAU	1
41	19281326/0	FASCETTA	CLAMP	BANDE	2
42	25790863/0	TUBO SCARICO SV 185	WATER DRAIN SV 185	TUYEAU SV 185	1
42A	25790897/0	TUBO SCARICO SV 265	WATER DRAIN SV 265	TUYEAU SV 265	1
43	19281332/0	FASCETTA	CLAMP	BANDE	2
44	81453099/0	TUBO ACQUA	WATER TUBE	TUYEAU	1
45	12792400/0	VITE	SCREW	VIS	4
46	12768410/0	VITE	SCREW	VIS	1
47	12788880/0	VITE	SCREW	VIS	9
48	12726389/0	VITE	SCREW	VIS	2
49	12540070/0	ROSETTA	WASHER	RONDELLE	1
50	12540020/0	ROSETTA	WASHER	RONDELLE	2
51	12523040/0	RONDELLA	WASHER	RONDELLE	1
52	12295200/0	DADO	NUT	ECROU	1
53	12291600/0	DADO	NUT	ECROU	2
54	12292102/0	DADO	NUT	ECROU	10
55	12291600/0	DADO	NUT	ECROU	1
56	25550049/0	PANNELLO POSTERIORE SV 185	BACK PANEL SV 185	PANNEAU POSTERIEUR SV 185	1
56A	25550060/0	PANNELLO POSTERIORE SV 265	BACK PANEL SV 265	PANNEAU POSTERIEUR SV 265	1
57	12728106/0	VITE	SCREW	VIS	7
58	12436400/0	PIASTRINA	PLATTE	PLAQUETTE	7