DESPIECE TECNICO

Cocinas a Gas
Fourneaux a Gaz
Gas Cookers
Gas Herde
Cucine a Gas

GAMA 900

Modelos:

CG9-20
CG9-40
CG9-60
CG9-41
CG9-61
CG9-82
CG9-61 OP
CGE9-41

Junio 2009 June

Fagor Industrial

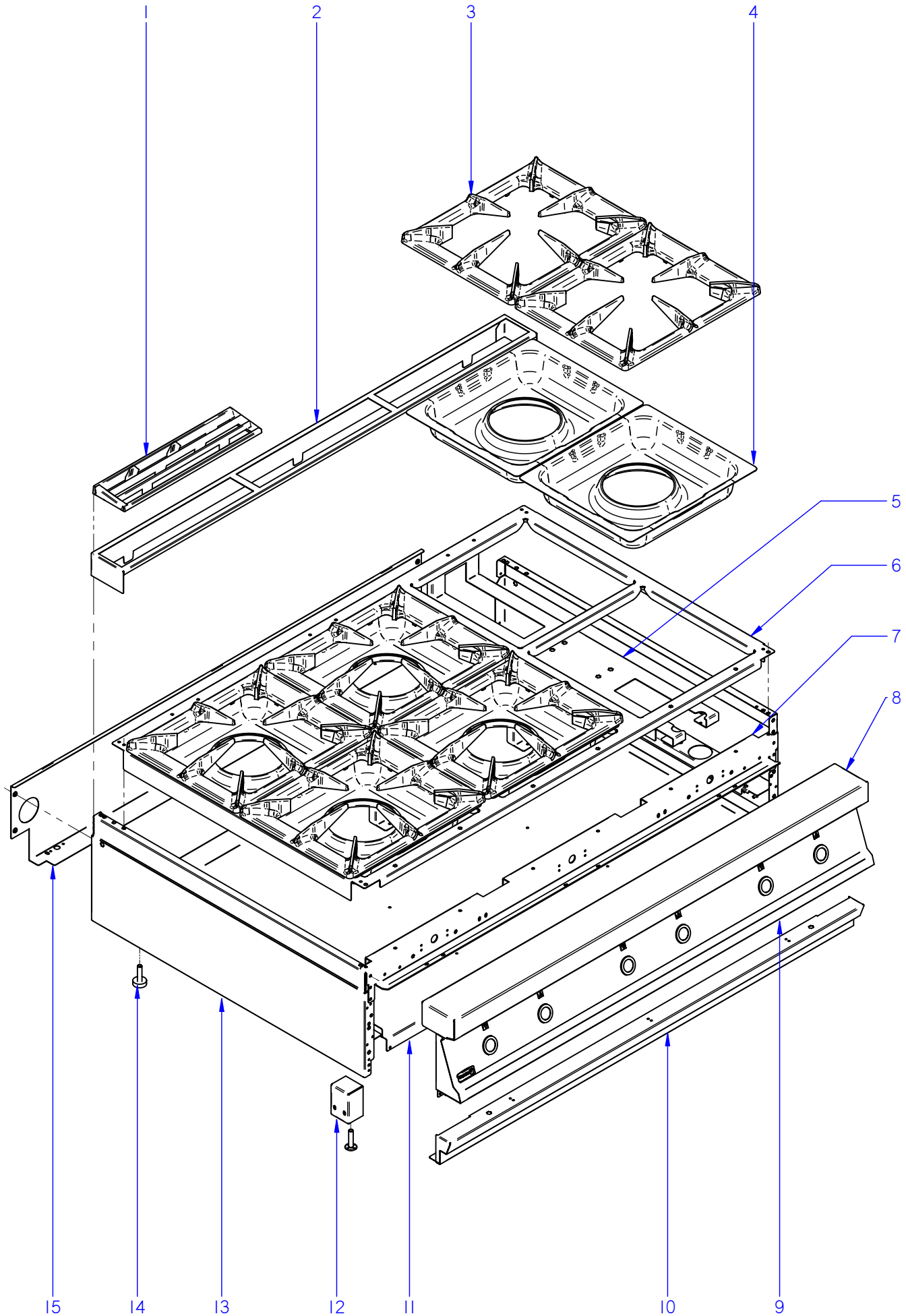

ITEM MARCADO EN COLOR = REPUESTO RECOMENDADO
COLOURED ITEM = RECOMMENDED SPARE PART

N plano	Firma	Fecha	Aparato	MUEBLE	Lamina	
C-2340		2009-06	COCINAS CG9-20 / CG9-40 / CG9-60		1	Fagor Industrial S.Coop. FAGOR Oñate

MOD.	COCINAS	ZONA	MUEBLE / UNIT	PLANO	C-2340

ITEM	CODIGO	DENOMINACION	TEXTO	CG9-20	CG9-40	CG9-60					NOTAS
1	R205425000	EMBELLECEDOR ESMALTE	ENAMEL TRIM	1	2	3					
2	R205438000	SOPORTE EMBELLECEDOR 0,5 M	TRIM SUPPORT 0.5 M	1	_	_					
2	R205439000	SOPORTE EMBELLECEDOR 1 M	TRIM SUPPORT 1 M	_	1	_					
2	R205440000	SOPORTE EMBELLECEDOR 1,5 M	TRIM SUPPORT 1.5 M	_	_	1					
3	U035409000	PARRILLA GAMA 900	GRILL 900 RANGE	2	4	6					
4	U025473000	BACINETA QUEMADOR G900	BASIN BURNER G900	2	4	6					
5	U022617000	LISTON SOPORTE QUEMADOR	BURNER SUPPORT STRIP	1	2	3					
	Q221343000	REMACHE EXAGONAL M6	HEXAGONAL RIVET M6	4	8	12					
	Q221342000	REMACHE EXAGONAL M5	HEXAGONAL RIVET M5	4	6	8					
6	U025474000	MESA 0,5 M G900	BENCH 0.5 M G900	1	_	_					
6	U025472000	MESA 1 M G900	BENCH 1 M G900	_	1	_					
6	U025475000	MESA 1,5 M G900	BENCH 1.5 M G900	_	_	1					
	Q152004000	TORNIL, APLASTADO M5x13 A304	FLAT HEADED BOLT M5x13 A304	8	10	12					
	Q221342000	REMACHE EXAGONAL M5	HEXAGONAL RIVET M5	2	4	6					
7	X162690000	ESCUA INTER AMAR ANTE 0,5 M	BRACKET INTER FASTE. FRONT	1	_	_					
7	U022632000	ESCUA INTER AMAR ANTE 1 M	BRACKET INTER FASTE. FRONT	_	1	_					
7	U032625000	ESCUA INTER AMAR ANTE 1,5 M	BRACKET INTER FASTE. FRONT	_	_	1					
	Q221342000	REMACHE EXAGONAL M5	HEXAGONAL RIVET M5	4	4	6					
	Q012032000	TORNILLO EXAGONAL M5x15	HEXAGONAL BOLT M5x15	6	6	6					
	Q152004000	TORNIL, APLASTADO M5x13 A304	FLAT HEADED BOLT M5x13 A304	2	4	6					
	Q302022000	ARANDELA 16x6x1,2 A304	WASHER 16x6x1.2 A304	2	4	6					
8	R045416000	ANTERIOR MESA 0,5 M	BENCH FRONT 0.5 M	1	_	_					
8	S105402000	ANTERIOR MESA 1 M	BENCH FRONT 1 M	_	1	_					
8	U035406000	ANTERIOR MESA 1,5 M	BENCH FRONT 1.5 M	_	_	1					
	Q152004000	TORNIL, APLASTADO M5x13 A304	FLAT HEADED BOLT M5x13 A304	2	2	3					
	Q302022000	ARANDELA 16x6x1,2 A304	WASHER 16x6x1.2 A304	2	2	3					
9	U012809000	PORTAMANDOS COMPL. CG9-20	COMPL. CONTROL HOLDER CG9	1	_	_					
9	U022856000	PORTAMANDOS COMPL. CG9-40	COMPL. CONTROL HOLDER CG9	_	1	_					
9	U032814000	PORTAMANDOS COMPL. CG9-60	COMPL. CONTROL HOLDER CG9	_	_	1					
	U022836000	ESCUDO FAGOR	FAGOR EMBLEM	1	1	1					
	Q221023000	CLIP SUJECIÓN RÁPIDA Ø5	RAPID CONNECT CLIP Ø5	2	2	2					

MOD.	COCINAS	ZONA	MUEBLE / UNIT	PLANO	C-2340

ITEM	CODIGO	DENOMINACION	TEXTO	CG9-20	CG9-40	CG9-60					NOTAS
10	R062805000	ZOCALO 0,5 M	SKIRTING 0.5 M	1	_	_					
10	H352817000	ZOCALO BAÑO MARIA	BAIN MARIE SKIRTING		1	_					
10	U032809000	ZOCALO 1,5 M	SKIRTING 1.5 M	_	_	1					
	Q419005000	REMACHE 4x8 ALMG3 / ALUMINIO	RIVET 4X8 ALMG3 / ALUMINIUM	2	2	2					
11	U022631000	BASE 0,5 M GAS	BASE 0.5 M GAS	1	_	_					
11	U022629000	BASE 1 M GAS	BASE 1 M GAS	_	1	_					
11	U032622000	BASE 1,5 M GAS	BASE 1.5 M GAS	_	_	1					
	Q419005000	REMACHE 4x8 ALMG3 / ALUMINIO	RIVET 4X8 ALMG3 / ALUMINIUM	4	9	16					
12	H012805000	ESCUADRA AMARRE PATA	LEG FASTENING BRACKET	2	2	2					
	Q162030000	TUERCA EXAGONAL M5	HEXAGONAL NUT M5	4	4	4					
	Q302022000	ARANDELA 16x6x1,2 A304	WASHER 16x6x1.2 A304	4	4	4					
	Q221345000	REMACHE EXAGONAL M10	HEXAGONAL RIVET M10	2	2	2					
13	R062811000	PANEL LATERAL IZQUIERDO G900	LEFT SIDE PANEL G900	1	1	1					
S/Nº	R062810000	PANEL LATERAL DERECHO G900	RIGHT SIDE PANEL G900	1	1	1					
	Q221342000	REMACHE EXAGONAL M5	HEXAGONAL RIVET M5	2	6	6					
	Q221343000	REMACHE EXAGONAL M6	HEXAGONAL RIVET M6	4	10	10					
14	Z200107000	PATA	LEG	4	4	4					
	Q221345000	REMACHE EXAGONAL M10	HEXAGONAL RIVET M10	4	4	4					
S/Nº	X010503000	CIERRE MUELLE	LOCK SPRING	3	4	6					
	Q419007000	REMACHE TUBULAR C/V Ø2x6	TUBULAR RIVET C/V Ø2x6	6	8	12					
15	H012824000	PANEL POSTERIOR 0,5 M	REAR PANEL 0.5 M	1	_	_					
15	H022809000	PANEL POSTERIOR 1 M	REAR PANEL 1 M	_	1	_					
15	U572850000	PANEL POSTERIOR 1,5 M	REAR PANEL 1.5 M	_	_	1					
	Q419005000	REMACHE 4x8 ALMG3 / ALUMINIO	RIVET 4X8 ALMG3 / ALUMINIUM	2	4	4					
	Q302022000	ARANDELA 16x6x1,2 A304	WASHER 16x6x1.2 A304	4	4	6					

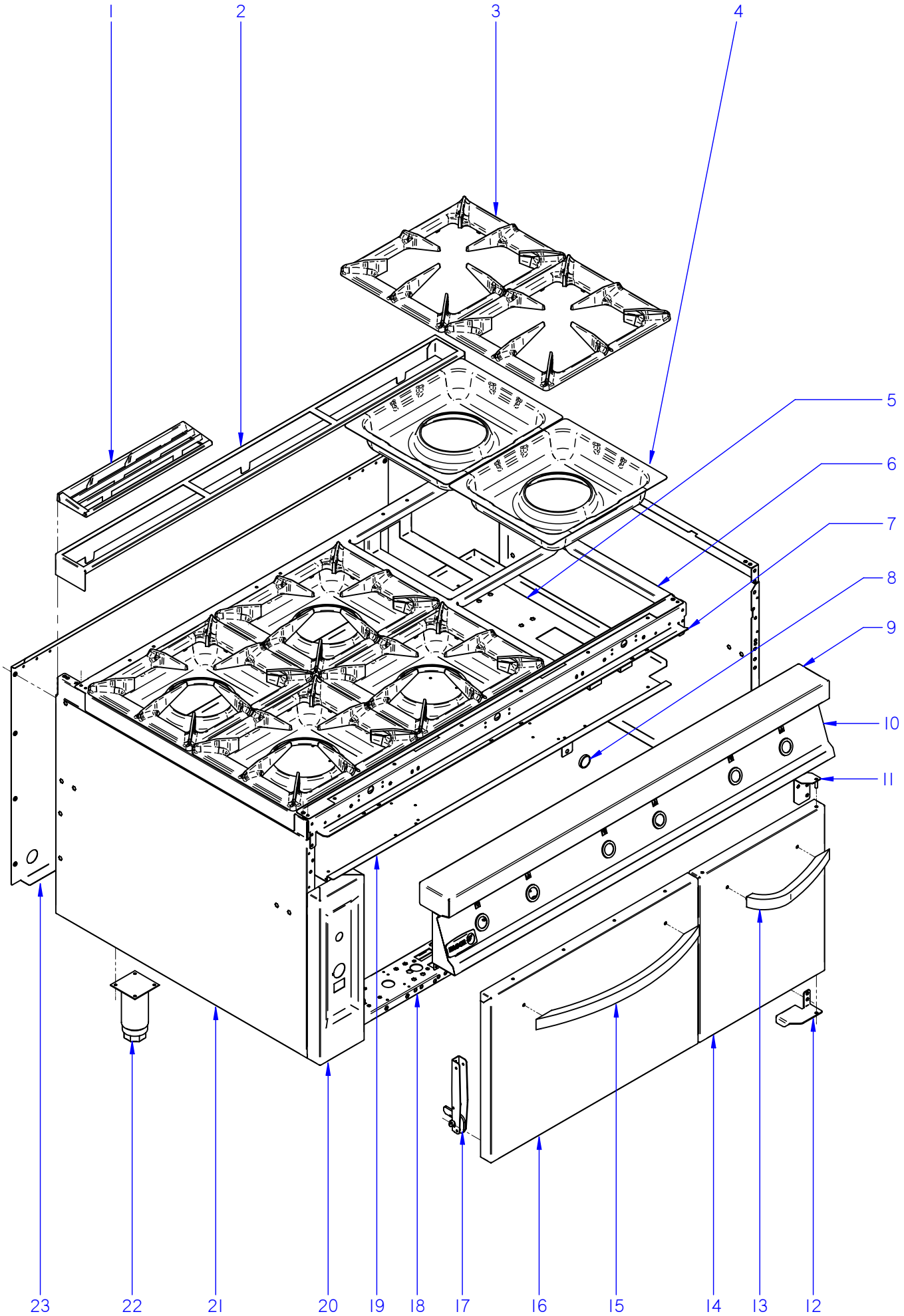

ITEM MARCADO EN COLOR = REPUESTO RECOMENDADO
COLOURED ITEM = RECOMMENDED SPARE PART

N plano	Firma	Fecha	Aparato	MUEBLE	Lamina	
C-2341		2009-06	COCINA CG9-41 / 61 / 82 / CGE9-41		2	Fagor Industrial S.Coop. FAGOR Oñate

MOD.	COCINAS	ZONA	MUEBLE / UNIT	PLANO	C-2341

ITEM	CODIGO	DENOMINACION	TEXTO	CG9-41	CG9-61	CG9-82	CG9-61 OP	CGE9-41			NOTAS
1	R205425000	EMBELLECEDOR ESMALTE	ENAMEL TRIM	2	3	4	3	2			
2	R205439000	SOPORTE EMBELLECEDOR 1 M	TRIM SUPPORT 1 M	1	_	2	_	1			
2	R205440000	SOPORTE EMBELLECEDOR 1,5 M	TRIM SUPPORT 1.5 M	_	1	_	1	_			
3	U035409000	PARRILLA GAMA 900	GRILL 900 RANGE	4	6	8	6	4			
4	U025473000	BACINETA QUEMADOR G900	BASIN BURNER G900	4	6	8	6	4			
5	U022617000	LISTON SOPORTE QUEMADOR	BURNER SUPPORT STRIP	2	3	4	3	2			
	Q221343000	REMACHE EXAGONAL M6	HEXAGONAL RIVET M6	8	12	16	12	8			
	Q221342000	REMACHE EXAGONAL M5	HEXAGONAL RIVET M5	4	8	16	8	4			
6	U025472000	MESA 1 M G900	BENCH 1 M G900	1	_	2	_	1			
6	U025475000	MESA 1,5 M G900	BENCH 1.5 M G900	_	1	_	1	_			
	Q152004000	TORNIL, APLASTADO M5x13 A304	FLAT HEADED BOLT M5x13 A304	10	12	20	12	10			
	Q221342000	REMACHE EXAGONAL M5	HEXAGONAL RIVET M5	4	6	8	6	4			
7	U022632000	ESCUA INTER AMAR ANTE 1 M	BRACKET INTER FASTE. FRONT	1	_	2	_	1			
7	U032625000	ESCUA INTER AMAR ANTE 1,5 M	BRACKET INTER FASTE. FRONT	_	1	_	1	_			
	Q221342000	REMACHE EXAGONAL M5	HEXAGONAL RIVET M5	4	6	8	6	4			
	Q012032000	TORNILLO EXAGONAL M5x15	HEXAGONAL BOLT M5x15	4	6	8	6	4			
	Q152004000	TORNIL, APLASTADO M5x13 A304	FLAT HEADED BOLT M5x13 A304	6	6	12	6	6			
	Q302022000	ARANDELA 16x6x1,2 A304	WASHER 16x6x1.2 A304	6	6	12	6	6			
8	X960501000	IMAN	MAGNET	_	2	_	_	_			
S/Nº	X960502000	FIJACION IMAN	MAGNET ATTACHMENT	_	2	_	_	_			
	Q012021000	TORNILLO EXAGONAL M4X10	HEXAGONAL BOLT M4x10	_	2	_	_	_			
	Q232020000	ARANDELA A4	WASHER A4	_	2	_	_	_			
9	S105402000	ANTERIOR MESA 1 M	BENCH FRONT 1 M	1	_	_	_	1			
9	U035406000	ANTERIOR MESA 1,5 M	BENCH FRONT 1.5 M	_	1	_	1	_			
9	U125401000	ANTERIOR MESA 2 M	BENCH FRONT 2 M	_	_	1	_	_			
	Q152004000	TORNIL, APLASTADO M5x13 A304	FLAT HEADED BOLT M5x13 A304	2	3	4	3	2			
	Q302022000	ARANDELA 16x6x1,2 A304	WASHER 16x6x1.2 A304	2	3	4	3	2			

MOD.	COCINAS	ZONA	MUEBLE / UNIT	PLANO	C-2341

ITEM	CODIGO	DENOMINACION	TEXTO	CG9-41	CG9-61	CG9-82	CG9-61 OP	CGE9-41			NOTAS
10	U022852000	PORTAMANDOS COMPL. CG9-41	CONTROL HOLDER CG9-41	1	_	_	_	1			
10	U032811000	PORTAMANDOS COMPL. CG9-61	CONTROL HOLDER CG9-61	_	1	_	_	_			
10	U122831000	PORTAMANDOS COMPL. CG9-82	CONTROL HOLDER CG9-82	_	_	1	_	_			
10	U102814000	PORTAMANDOS COMP. CG9-61OP	CONTROL HOLDER CG9-61OP	_	_	_	1	_			
	U022836000	ESCUDO FAGOR	FAGOR EMBLEM	1	1	1	1	1			
	Q221023000	CLIP SUJECIÓN RÁPIDA Ø5	RAPID CONNECT CLIP Ø5	2	2	2	2	2			
	Q152004000	TORNIL, APLASTADO M5x13 A304	FLAT HEADED BOLT M5x13	4	2	8	2	4			
11	U032619000	BISAGRA SUPERIOR DERECHA	UPPER RIGHT HINGE	_	1	_	_	_			
	Q221342000	REMACHE EXAGONAL M5	HEXAGONAL RIVET M5	_	2	_	_	_			
12	U020511000	BISAGRA DERECHA INFERIOR	LOWER RIGHT HINGE	_	1	_	_	_			
	Q232040000	ARANDELA A6	WASHER A6	_	1	_	_	_			
	X960504000	TORNILLO DE GIRO M8	ROTATION BOLT M8	_	1	_	_	_			
	Q012042000	TORNILLO EXAGONAL M6x15 A304	HEXAGONAL BOLT M6x15 A304	_	2	_	_	_			
	Q302022000	ARANDELA 16x6x1,2 A304	WASHER 16x6x1.2 A304	_	2	_	_	_			
13	U020507000	ASA ARMARIO COMPLETO G900	FULL CUPBOARD HANDLE G900	_	1	_	_	_			
	Q162040000	TUERCA EXAGONAL M6	HEXAGONAL NUT M6	_	2	_	_	_			
	Q302022000	ARANDELA 16x6x1,2 A304	WASHER 16x6x1.2 A304	_	2	_	_	_			
14	U020536000	PUERTA LATERAL G900	SIDE DOOR G900	_	1	_	_	_			
	Q419005000	REMACHE 4x8 ALMG3 / ALUMINIO	RIVET 4X8 ALMG3 / ALUMINIUM	_	4	_	_	_			
15	U020504000	ASA DE HORNO COMPLETA G900	COMPL. OVEN HANDLE G900	1	1	2	1	1			
	Q012041000	TORNILLO EXAGONAL M6x10	HEXAGONAL BOLT M6x10	2	2	4	2	2			
	Q302022000	ARANDELA 16x6x1,2 A304	WASHER 16x6x1.2 A304	2	2	4	2	2			
16	U910501000	PUERTA DE HORNO	OVEN DOOR	1	1	2	_	1			
16	U100514000	PUERTA DE HORNO GRANDE	OVEN DOOR	_	_	_	1	_			
17	U020528000	BISAGRA CIERRE HORNO	OVEN LOCK HINGE	2	2	4	2	2			
	Q152022000	TORNILLO M6x8	BOLT M6x8	6	6	12	6	6			
18	U022625000	LISTON SOPORTE PATAS 1 M	LEG SUPPORT STRIP 1 M	2	_	_	_	2			
18	U032615000	LISTON SOPORTE PATAS 1,5 M	LEG SUPPORT STRIP 1.5 M	_	2	_	_	_			
18	U122606000	LISTON SOPORTE PATAS 2 M	LEG SUPPORT STRIP 2 M	_	_	2	_	_			
18	U102611000	LISTON SOPORTE PATAS 1,5 M OP	LEG SUPPORT STRIP 1.5 M	_	_	_	2	_			

MOD.	COCINAS	ZONA	MUEBLE / UNIT	PLANO	C-2341

ITEM	CODIGO	DENOMINACION	TEXTO	CG9-41	CG9-61	CG9-82	CG9-61 OP	CGE9-41			NOTAS
19	U022613000	BASE BANDEJAS 1 M	TRAY BASE 1 M	1	_	2	_	1			
19	U022626000	BASE BANDEJAS 1,5 M	TRAY BASE 1.5 M	_	1	_	_	_			
19	U102615000	BASE BANDEJAS 1,5 M OP	TRAY BASE 1.5 M OP	_	_	_	1	_			
	Q419005000	REMACHE 4x8 ALMG3 / ALUMINIO	RIVET 4X8 ALMG3 / ALUMINIUM	2	2	4	2	2			
	Q152004000	TORNIL, APLASTADO M5x13 A304	FLAT HEADED BOLT M5x13 A304	3	3	6	3	3			
20	U022843000	PORTAMANDOS LATERAL HORNO	OVEN SIDE CONTROL HOLDER	1	1	2	1	_			
20	U672855000	PORTAMANDOS LATERAL HORNO	OVEN SIDE CONTROL HOLDER	_	_	_	_	1			
	Q152004000	TORNIL, APLASTADO M5x13 A304	FLAT HEADED BOLT M5x13 A304	2	2	4	2	2			
21	X162813000	PANEL LATERAL IZQUIERDO G900	LEFT SIDE PANEL G900	1	1	2	1	1			
S/Nº	U022842000	PANEL LATERAL DERECHO G9-00	RIGHT SIDE PANEL G9-00	1	_	2	_	1			
S/Nº	X162814000	PANEL LATERAL DERECHO G9-00	RIGHT SIDE PANEL G9-00	_	1	_	_	_			
S/Nº	U022819000	PANEL LATERAL DERECHO G9-00	RIGHT SIDE PANEL G9-00	_	_	_	1	_			
	Q221343000	REMACHE EXAGONAL M6	HEXAGONAL RIVET M6	22	22	30	22	22			
	Q221342000	REMACHE EXAGONAL M5	HEXAGONAL RIVET M5	22	22	44	22	22			
	Q012043000	TORNILLO EXAGONAL M6x20 A304	HEXAGONAL BOLT M6x20 A304	4	4	4	4	4			
	Q152004000	TORNILLO APLASTADO M5x13 A304	FLAT HEADED BOLT M5x13 A304	6	6	6	6	6			
22	X260151000	PATA REGULABLE	ADJUSTABLE LEG	4	4	4	4	4			
	Q411304000	REMACHE AVIBULB Ø 4,8	AVIBULB RIVET Ø 4.8	16	16	16	16	16			
23	U562853000	PANEL POSTERIOR 1 M	REAR PANEL 1 M	1	_	_	_	1			
23	U582852000	PANEL POSTERIOR 1,5 M	REAR PANEL 1.5 M	_	1	_	1	_			
23	U592852000	PANEL POSTERIOR 2 M	REAR PANEL 2 M	1	_	1	_	1			
	Q419005000	REMACHE 4x8 ALMG3 / ALUMINIO	RIVET 4X8 ALMG3 / ALUMINIUM	8	11	16	11	8			

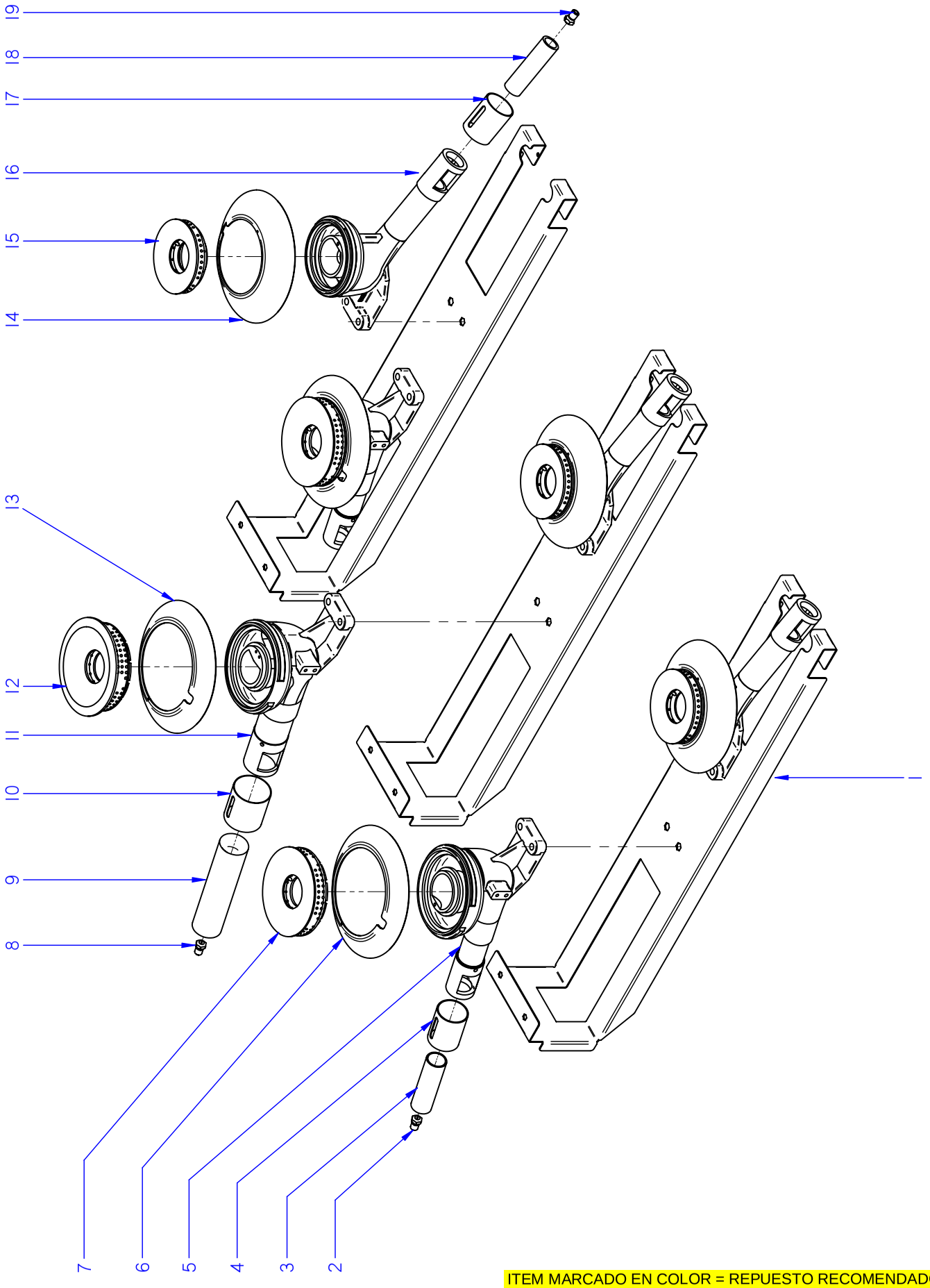

ITEM MARCADO EN COLOR = REPUESTO RECOMENDADO
COLOURED ITEM = RECOMMENDED SPARE PART

N plano	Firma	Fecha	Aparato		Lamina	
C-2342		2009-06	QUEMADORES COCINA CG9-20 / 40 / 60 / CGE9-41		3	Fagor Industrial S.Coop. FAGOR Onate

MOD.	COCINAS	ZONA	QUEMADORES / BURNERS	PLANO	C-2342

ITEM	CODIGO	DENOMINACION	TEXTO	CG9-20	CG9-40	CG9-60	CGE9-41				NOTAS
1	U022617000	LISTON SOP. QUEMADOR G900	BURNER SUPPORT STRIP	1	2	3	2				
	Q221343000	REMACHE EXAGONAL M6	HEXAGONAL RIVET M6	4	8	12	8				
	Q221342000	REMACHE EXAGONAL M5	HEXAGONAL RIVET M5	4	6	8	4				
2	631000000	TOBERA Ø 1,40 BP (8000)	NOZZLE Ø 1.40 BP (8000)	1	1	2	1				
2	U112402000	TOBERA Ø 2,10 GN (8000)	NOZZLE Ø 2,10 GN (8000)	1	1	2	1				
3	U565700000	VENTURI QUEMADOR 8000	VENTURI BURNER 8000	1	1	2	1				
4	U265702000	REGULADOR AIRE	AIR CONTROLLER	1	1	2	1				
	Q132054000	VARILLA ROSCADA M6 x 12	THREADED ROD M6 x 12	1	1	2	1				
	Q162004000	TUERCA EXAGONAL M6	HEXAGONAL NUT M6	1	1	2	1				
5	U025710000	CUERPO QUEMADOR 8000 Kcal/H	BURNER BODY 8000 Kcal/h	1	1	2	1				
6	U915703000	PROTEC. PILOTO QUEMAD. 7000	BURNER PILOT GUARD 7000	1	1	2	1				
	Q372004000	PASADOR ELASTICO 5x20	ELASTIC PIN 5x20	2	2	4	4				
7	U135702500	QUEMADOR 8000	BURNER 8000	1	1	2	1				
	Q371026000	MANGUITO DE SUJECION Ø 4x14	HANDLE Ø 4x14	1	1	2	1				
	Q012045000	TORNILLO EXAGONAL M6x30 A304	HEXAGONAL BOLT M6x30 A304	1	1	2	1				
	Q302022000	ARANDELA 16x6x1,2 A304	WASHER 16x6x1.2 A304	1	1	2	1				
	U565011000	TUERCA GUIA	GUIDE NUT	1	1	2	1				
8	U112401000	TOBERA Ø 1,55 BP (10500)	NOZZLE Ø 1.55 BP (10500)	_	1	1	1				
8	631600000	TOBERA Ø 2,40 GN (10500)	NOZZLE Ø 2.40 GN (10500)	_	1	1	1				
9	U235706000	VENTURI 10.500	VENTURI 10,500	_	1	1	1				
10	U025706000	REGULADOR DE AIRE 10.000	AIR CONTROL 10.000	_	1	1	1				
	Q132054000	VARILLA ROSCADA M6x12	THREADED ROD M6X12	_	1	1	1				
	Q162004000	TUERCA EXAGONAL M6	HEXAGONAL NUT M6	_	1	1	1				
11	U025711000	CUERPO QUEMADOR 10.000Kcal/H	BURNER BODY 10,000 Kcal/H	_	1	1	1				
	Q371028000	MANGUITO DE SUJECION Ø 3x14	HANDLE Ø 3x14	_	2	2	2				
12	U235701500	DIFUSOR 10.500 Kcal/H	DIFFUSER 10.500 Kcal/H	_	1	1	1				
	Q012045000	TORNILLO EXAGONAL M6x30 A304	HEXAGONAL BOLT M6x30 A304	_	1	1	1				
	Q302022000	ARANDELA 16x6x1,2 A304	WASHER 16x6x1.2 A304	_	1	1	1				
13	U915703000	PROTEC. PILOTO QUEMAD. 7000	BURNER PILOT GUARD 7000	_	1	1	1				
	Q372004000	PASADOR ELASTICO 5x20	ELASTIC PIN 5x20	_	2	2	4				
14	U025712000	PROTEC. PILOTO QUEMAD. 4000	BURNER PILOT GUARD 4000	1	2	3	2				

MOD.	COCINAS	ZONA	QUEMADORES / BURNERS	PLANO	C-2342

ITEM	CODIGO	DENOMINACION	TEXTO	CG9-20	CG9-40	CG9-60	CGE9-41				NOTAS
15	U445731500	QUEMADOR 4000 (00545-010)	BURNER 4000 (00545-010)	1	2	3	2				
	Q012045000	TORNILLO EXAGONAL M6x30 A304	HEXAGONAL BOLT M6x30 A304	1	2	3	2				
	Q302022000	ARANDELA 16x6x1,2 A304	WASHER 16x6x1.2 A304	1	2	3	2				
16	U025709000	CUERPO QUEMADOR 4000Kcal/H	BURNER BODY 4000 Kcal/H	1	2	3	2				
	Q371026000	MANGUITO DE SUJECION Ø 4x14	HANDLE Ø 4x14	1	2	3	2				
17	U265702000	REGULADOR AIRE	AIR CONTROLLER	1	2	3	2				
	Q132042000	VARILLA ROSCADA M6 x 15	THREADED ROD M6 x 15	1	2	3	2				
	Q162004000	TUERCA EXAGONAL M6	HEXAGONAL NUT M6	1	2	3	2				
18	U125720000	VENTURI QUEMADOR 4000 kcl	VENTURI BURNER 4000 kcl	1	2	3	2				
19	X312400000	TOBERA Ø 1,10 BP (4000)	NOZZLE Ø 1.10 BP (4000)	1	2	3	2				
19	R302400000	TOBERA Ø 1,65 GN (4000)	NOZZLE Ø 1.65 GN (4000)	1	2	3	2				

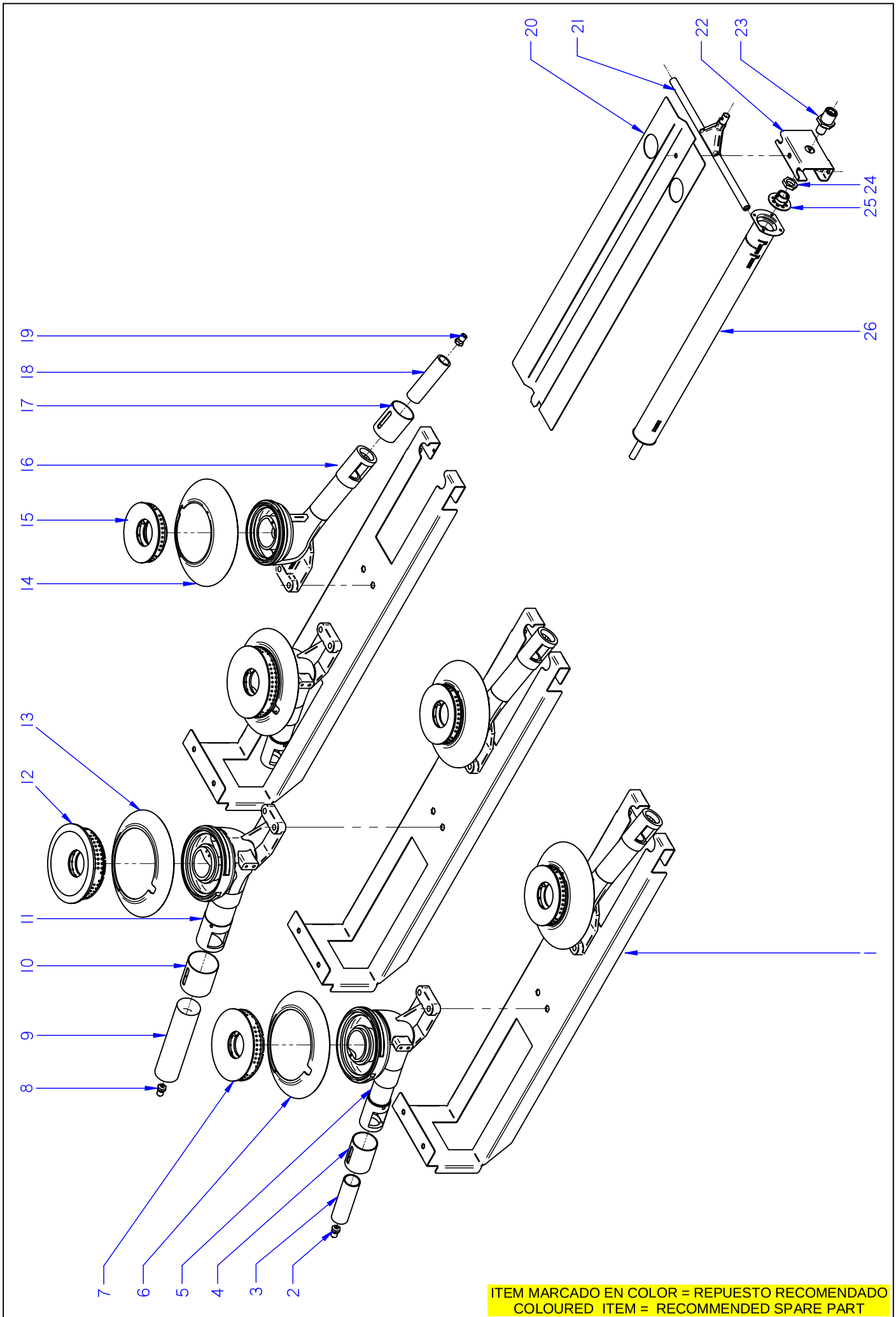

ITEM MARCADO EN COLOR = REPUESTO RECOMENDADO
COLOURED ITEM = RECOMMENDED SPARE PART

N plano	Firma	Fecha	Aparato		Lamina	
C-2343		2009-06	QUEMADORES COCINA CG9-41 / 61 / 82 / 61 OP		4	Fagor Industrial S.Coop. FAGOR Onate

MOD.	COCINAS	ZONA	QUEMADORES / BURNERS	PLANO	C-2343

ITEM	CODIGO	DENOMINACION	TEXTO	CG9-41	CG9-61	CG9-82	CG9-61 OP				NOTAS
1	U022617000	LISTON SOP. QUEMADOR G900	BURNER SUPPORT STRIP	2	3	4	3				
	Q221343000	REMACHE EXAGONAL M6	HEXAGONAL RIVET M6	8	12	16	12				
	Q221342000	REMACHE EXAGONAL M5	HEXAGONAL RIVET M5	4	8	16	8				
2	631000000	TOBERA Ø 1,40 BP (8000)	NOZZLE Ø 1.40 BP (8000)	1	2	2	2				
2	U112402000	TOBERA Ø 2,10 GN (8000)	NOZZLE Ø 2,10 GN (8000)	1	2	2	2				
3	U565700000	VENTURI QUEMADOR 8000	VENTURI BURNER 8000	1	2	2	2				
4	U265702000	REGULADOR AIRE	AIR CONTROLLER	1	2	2	2				
	Q132054000	VARILLA ROSCADA M6 x 12	THREADED ROD M6 x 12	1	2	2	2				
	Q162004000	TUERCA EXAGONAL M6	HEXAGONAL NUT M6	1	2	2	2				
5	U025710000	CUERPO QUEMADOR 8000 Kcal/H	BURNER BODY 8000 Kcal/h	1	2	2	2				
6	U915703000	PROTEC. PILOTO QUEMAD. 7000	BURNER PILOT GUARD 7000	1	2	2	2				
	Q372004000	PASADOR ELASTICO 5x20	ELASTIC PIN 5x20	4	6	4	6				
7	U135702500	QUEMADOR 8000	BURNER 8000	1	2	2	2				
	Q371026000	MANGUITO DE SUJECION Ø 4x14	HANDLE Ø 4x14	1	2	2	2				
	Q012045000	TORNILLO EXAGONAL M6x30 A304	HEXAGONAL BOLT M6x30 A304	1	4	2	4				
	Q302022000	ARANDELA 16x6x1,2 A304	WASHER 16x6x1.2 A304	1	4	2	4				
	U565011000	TUERCA GUIA	GUIDE NUT	1	2	2	2				
8	U112401000	TOBERA Ø 1,55 BP (10500)	NOZZLE Ø 1.55 BP (10500)	1	1	2	1				
8	631600000	TOBERA Ø 2,40 GN (10500)	NOZZLE Ø 2.40 GN (10500)	1	1	2	1				
9	U235706000	VENTURI 10.500	VENTURI 10,500	1	1	2	1				
10	U025706000	REGULADOR DE AIRE 10.000	AIR CONTROL 10.000	1	1	2	1				
	Q132054000	VARILLA ROSCADA M6x12	THREADED ROD M6X12	1	1	2	1				
	Q162004000	TUERCA EXAGONAL M6	HEXAGONAL NUT M6	1	1	2	1				
11	U025711000	CUERPO QUEMADOR 10.000Kcal/H	BURNER BODY 10,000 Kcal/H	1	1	2	1				
	Q371028000	MANGUITO DE SUJECION Ø 3x14	HANDLE Ø 3x14	2	2	4	2				
12	U235701500	DIFUSOR 10.500 Kcal/H	DIFFUSER 10.500 Kcal/H	1	1	2	1				
	Q012045000	TORNILLO EXAGONAL M6x30 A304	HEXAGONAL BOLT M6x30 A304	1	1	2	1				
	Q302022000	ARANDELA 16x6x1,2 A304	WASHER 16x6x1.2 A304	1	1	2	1				
13	U915703000	PROTEC. PILOTO QUEMAD. 7000	BURNER PILOT GUARD 7000	1	1	2	1				
	Q372004000	PASADOR ELASTICO 5x20	ELASTIC PIN 5x20	4	2	4	2				
14	U025712000	PROTEC. PILOTO QUEMAD. 4000	BURNER PILOT GUARD 4000	2	3	4	3				

MOD.	COCINAS	ZONA	QUEMADORES / BURNERS	PLANO	C-2343

ITEM	CODIGO	DENOMINACION	TEXTO	CG9-41	CG9-61	CG9-82	CG9-61 OP				NOTAS
15	U445731500	QUEMADOR 4000 (00545-010)	BURNER 4000 (00545-010)	2	3	4	3				
	Q012045000	TORNILLO EXAGONAL M6x30 A304	HEXAGONAL BOLT M6x30 A304	2	6	4	6				
	Q302022000	ARANDELA 16x6x1,2 A304	WASHER 16x6x1.2 A304	2	6	4	6				
16	U025709000	CUERPO QUEMADOR 4000Kcal/H	BURNER BODY 4000 Kcal/H	2	3	4	3				
	Q371026000	MANGUITO DE SUJECION Ø 4x14	HANDLE Ø 4x14	2	3	4	3				
17	U265702000	REGULADOR AIRE	AIR CONTROLLER	2	3	4	3				
	Q132042000	VARILLA ROSCADA M6 x 15	THREADED ROD M6 x 15	2	3	4	3				
	Q162004000	TUERCA EXAGONAL M6	HEXAGONAL NUT M6	2	3	4	3				
18	U125720000	VENTURI QUEMADOR 4000 kcl	VENTURI BURNER 4000 kcl	2	3	4	3				
19	X312400000	TOBERA Ø 1,10 BP (4000)	NOZZLE Ø 1.10 BP (4000)	2	3	4	3				
19	R302400000	TOBERA Ø 1,65 GN (4000)	NOZZLE Ø 1.65 GN (4000)	2	3	4	3				
20	U915613000	DEFLECTOR QUEMADOR HORNO	OVEN BURNER DEFLECTOR	2	2	4	_				
20	U105610000	DEFLECTOR QUEMADOR HORNO	OVEN BURNER DEFLECTOR	_	_	_	2				
	Q152004000	TORNIL, APLASTADO M5x13 A304	FLAT HEADED BOLT M5x13 A304	1	1	2	2				
	Q302022000	ARANDELA 16x6x1,2 A304	WASHER 16x6x1.2 A304	1	1	2	2				
21	U105712000	RAMA ENCENDIDO QUEM. HORNO	OVEN BURNER IGNITION BRANC	_	_	_	1				
	X205028000	BICONO Ø 6	BICONEØ 6	_	_	_	1				
	U105013000	TUERCA M10x1(024 0003.00)POL	NUT M10x1(024 0003.00)POL	_	_	_	1				
22	U105635000	AMARRE QUEMADOR HORNO(HG)	OVEN BURNER FASTENING (HG)	1	1	2	2				
	Q012031000	TORNILLO EXAGONAL M5x10 A304	HEXAGONAL BOLT M5x10 A304	2	2	4	4				
	Q222041000	REMACHE EXAGONAL M4 (INOX)	HEXAGONAL RIVET M4 (INOX)	4	4	8	8				
23	X505724000	MANGUITO PORTATOBERAS	NOZZLE HOLDER SLEEVE	1	1	2	2				
24	Q223019000	TUERCA 3/8 GAS LATÓN	NUT 3/8 GAS BRASS	1	1	2	2				
25	X505013000	REGULADOR DE AIRE POLIDORO	POLIDORO AIR CONTROL	1	1	2	2				
	Q031322000	TORNILLO ALOMADO M4X15	CURVED SCREW M4X15	1	1	2	2				
26	U105701000	QUEMADOR HORNO	OVEN BURNER.	1	1	2	2				
	Q042022000	TORNILLO AVELLLANADO M4X15	COUNTERSUNK BOLT M4x15	4	4	8	8				
S/Nº	U052401000	TOBERA Ø 1,45 BP	NOZZLE Ø 1.45 BP	1	1	2	_				
S/Nº	631000000	TOBERA Ø 1,40 BP	NOZZLE Ø 1.40 BP	_	_	_	1				
S/Nº	U262400000	TOBERA Ø 2,15 GN	NOZZLE Ø 2.15 GN	1	1	2	_				
S/Nº	U262400000	TOBERA Ø 2,15 GN	NOZZLE Ø 2.15 GN	_	_	_	1				

MOD.	COCINAS	ZONA	QUEMADORES / BURNERS	PLANO	C-2342 C-2343

ITEM	CODIGO	DENOMINACION	TEXTO	CG9-20 H	CG9-40 H	CG9-60 H	CG9-41 H	CG9-61 H			NOTAS
1	U022617000	LISTON SOP. QUEMADOR G900	BURNER SUPPORT STRIP	1	2	3	2	3			
	Q221343000	REMACHE EXAGONAL M6	HEXAGONAL RIVET M6	4	8	12	8	12			
	Q221342000	REMACHE EXAGONAL M5	HEXAGONAL RIVET M5	4	6	8	6	8			
2	631000000	TOBERA Ø 1,40 BP (8000)	NOZZLE Ø 1.40 BP (8000)	1	3	5	3	5			
2	U112402000	TOBERA Ø 2,10 GN (8000)	NOZZLE Ø 2,10 GN (8000)	1	3	5	3	5			
3	U565700000	VENTURI QUEMADOR 8000	VENTURI BURNER 8000	1	3	5	3	5			
4	U265702000	REGULADOR AIRE	AIR CONTROLLER	1	3	5	3	5			
	Q132054000	VARILLA ROSCADA M6 x 12	THREADED ROD M6 x 12	1	3	5	3	5			
	Q162004000	TUERCA EXAGONAL M6	HEXAGONAL NUT M6	1	3	5	3	5			
5	U025710000	CUERPO QUEMADOR 8000 Kcal/H	BURNER BODY 8000 Kcal/h	1	3	5	3	5			
6	U915703000	PROTEC. PILOTO QUEMAD. 7000	BURNER PILOT GUARD 7000	1	3	5	3	5			
	Q372004000	PASADOR ELASTICO 5x20	ELASTIC PIN 5x20	2	6	10	6	10			
7	U135702500	QUEMADOR 8000	BURNER 8000	1	3	5	3	5			
	Q371026000	MANGUITO DE SUJECION Ø 4x14	HANDLE Ø 4x14	1	3	5	3	5			
	Q012045000	TORNILLO EXAGONAL M6x30 A304	HEXAGONAL BOLT M6x30 A304	1	3	5	3	5			
	Q302022000	ARANDELA 16x6x1,2 A304	WASHER 16x6x1.2 A304	1	3	5	3	5			
	U565011000	TUERCA GUIA	GUIDE NUT	1	3	5	3	5			
8	U112401000	TOBERA Ø 1,55 BP (10500)	NOZZLE Ø 1.55 BP (10500)	1	1	1	1	1			
8	631600000	TOBERA Ø 2,40 GN (10500)	NOZZLE Ø 2.40 GN (10500)	1	1	1	1	1			
9	U235706000	VENTURI 10.500	VENTURI 10,500	1	1	1	1	1			
10	U025706000	REGULADOR DE AIRE 10.000	AIR CONTROL 10.000	1	1	1	1	1			
	Q132054000	VARILLA ROSCADA M6x12	THREADED ROD M6X12	1	1	1	1	1			
	Q162004000	TUERCA EXAGONAL M6	HEXAGONAL NUT M6	1	1	1	1	1			
11	U025711000	CUERPO QUEMADOR 10.000Kcal/H	BURNER BODY 10,000 Kcal/H	1	1	1	1	1			
	Q371028000	MANGUITO DE SUJECION Ø 3x14	HANDLE Ø 3x14	1	2	2	2	2			
12	U235701500	DIFUSOR 10.500 Kcal/H	DIFFUSER 10.500 Kcal/H	1	1	1	1	1			
	Q012045000	TORNILLO EXAGONAL M6x30 A304	HEXAGONAL BOLT M6x30 A304	1	1	1	1	1			
	Q302022000	ARANDELA 16x6x1,2 A304	WASHER 16x6x1.2 A304	1	1	1	1	1			
13	U915703000	PROTEC. PILOTO QUEMAD. 7000	BURNER PILOT GUARD 7000	1	1	1	1	1			
	Q372004000	PASADOR ELASTICO 5x20	ELASTIC PIN 5x20	2	1	2	1	2			
14	U025712000	PROTEC. PILOTO QUEMAD. 4000	BURNER PILOT GUARD 4000	_	_	_	_	_			

MOD.	COCINAS	ZONA	QUEMADORES / BURNERS	PLANO	C-2342 C-2343

ITEM	CODIGO	DENOMINACION	TEXTO	CG9-20 H	CG9-40 H	CG9-60 H	CG9-41 H	CG9-61 H			NOTAS
15	U445731500	QUEMADOR 4000 (00545-010)	BURNER 4000 (00545-010)	_	_	_	_	_			
	Q012045000	TORNILLO EXAGONAL M6x30 A304	HEXAGONAL BOLT M6x30 A304	_	_	_	_	_			
	Q302022000	ARANDELA 16x6x1,2 A304	WASHER 16x6x1.2 A304	_	_	_	_	_			
16	U025709000	CUERPO QUEMADOR 4000Kcal/H	BURNER BODY 4000 Kcal/H	_	_	_	_	_			
	Q371026000	MANGUITO DE SUJECION Ø 4x14	HANDLE Ø 4x14	_	_	_	_	_			
17	U265702000	REGULADOR AIRE	AIR CONTROLLER	_	_	_	_	_			
	Q132042000	VARILLA ROSCADA M6 x 15	THREADED ROD M6 x 15	_	_	_	_	_			
	Q162004000	TUERCA EXAGONAL M6	HEXAGONAL NUT M6	_	_	_	_	_			
18	U125720000	VENTURI QUEMADOR 4000 kcl	VENTURI BURNER 4000 kcl	_	_	_	_	_			
19	X312400000	TOBERA Ø 1,10 BP (4000)	NOZZLE Ø 1.10 BP (4000)	_	_	_	_	_			
19	R302400000	TOBERA Ø 1,65 GN (4000)	NOZZLE Ø 1.65 GN (4000)	_	_	_	_	_			
20	U915613000	DEFLECTOR QUEMADOR HORNO	OVEN BURNER DEFLECTOR	_	_	_	2	2			
	Q152004000	TORNIL, APLASTADO M5x13 A304	FLAT HEADED BOLT M5x13 A304	_	_	_	1	1			
	Q302022000	ARANDELA 16x6x1,2 A304	WASHER 16x6x1.2 A304	_	_	_	1	1			
22	U105635000	AMARRE QUEMADOR HORNO(HG)	OVEN BURNER FASTENING (HG)	_	_	_	1	1			
	Q012031000	TORNILLO EXAGONAL M5x10 A304	HEXAGONAL BOLT M5x10 A304	_	_	_	2	2			
	Q222041000	REMACHE EXAGONAL M4 (INOX)	HEXAGONAL RIVET M4 (INOX)	_	_	_	4	4			
23	X505724000	MANGUITO PORTATOBERAS	NOZZLE HOLDER SLEEVE	_	_	_	1	1			
24	Q223019000	TUERCA 3/8 GAS LATÓN	NUT 3/8 GAS BRASS	_	_	_	1	1			
25	X505013000	REGULADOR DE AIRE POLIDORO	POLIDORO AIR CONTROL	_	_	_	1	1			
	Q031322000	TORNILLO ALOMADO M4X15	CURVED SCREW M4X15	_	_	_	1	1			
26	U105701000	QUEMADOR HORNO	OVEN BURNER.	_	_	_	1	1			
	Q042022000	TORNILLO AVELLLANADO M4X15	COUNTERSUNK BOLT M4x15	_	_	_	4	4			
S/Nº	U052401000	TOBERA Ø 1,45 BP	NOZZLE Ø 1.45 BP	_	_	_	1	1			
S/Nº	U262400000	TOBERA Ø 2,15 GN	NOZZLE Ø 2.15 GN	_	_	_	1	1			

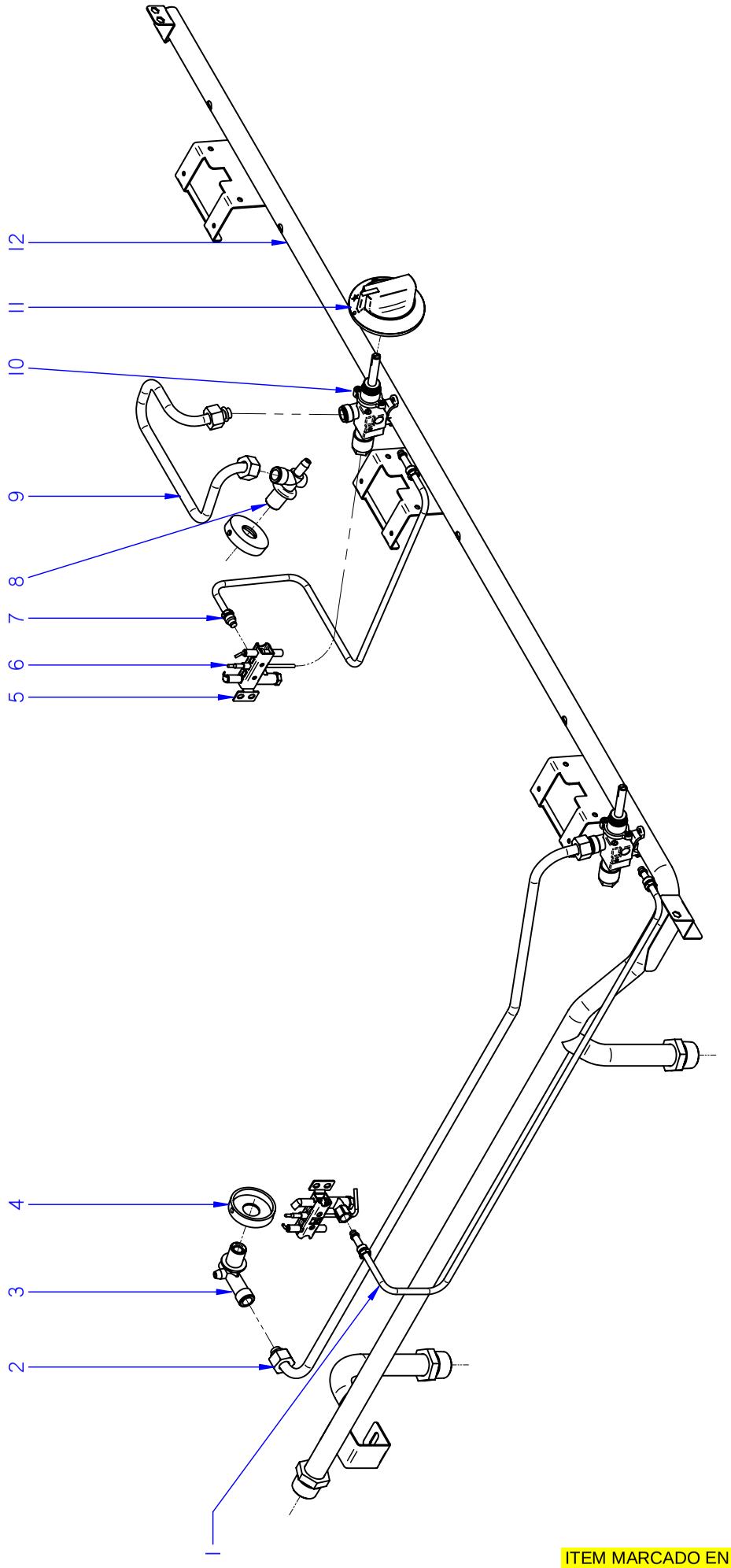

ITEM MARCADO EN COLOR = REPUESTO RECOMENDADO
COLOURED ITEM = RECOMMENDED SPARE PART

N plano	Firma	Fecha	Aparato		Lamina	
C-2344		2009-06	CONDUCCIONES Y GRIFOS COCINA CG9-20 / 40 / 60 / CGE9-41		5	Fagor Industrial S.Coop. Oñate

MOD.	COCINAS	ZONA	CONDUCCIONES Y GRIFOS / PIPES AND TAPS	PLANO	C-2344

ITEM	CODIGO	DENOMINACION	TEXTO	CG9-20	CG9-40	CG9-60	CGE9-41				NOTAS
1	U025053000	TUBO PILOTO POST. COMPLETO	REAR PILOT PIPE COMPLETE	1	2	3	2				
2	U025059000	CON. QUEMADOR POSTER. COMP.	REAR BURNER UNIT COMP.	1	2	3	2				
3	U915014000	PORTATOBERAS HORNO	OVEN NOZZLE HOLDER	1	2	3	2				
	Q153002000	TORNILLO TAPON	CAP BOLT	1	2	3	2				
4	U022619000	POSICIONADOR PORTATOB. 4000	NOZZLE-HOLDER POSITION. 400	2	3	5	3				
S/Nº	U022620000	POSICIONADOR PORTATOB. G900	NOZZLE-HOLDER POSITION. G90	_	1	1	1				
5	_____	CONJUNTO PILOTO COMPLETO	COMPLETE PILOT UNIT	2	4	6	4				
S/Nº	X012126000	CUERPO SIN RAC. 901.210 B-P	BODY WITHOUT CONNEC. 901.21	2	4	6	4				
S/Nº	U442136000	CUERPO SIN RACORD G-N	BODY WITHOUT CONNEC. 901.21	2	4	6	4				
S/Nº	U442137000	INYECTOR Ø 0,4 G-N	INJECTOR Ø 0.4 GN.	2	4	6	4				
S/Nº	U912107000	CABEZA PILOTO 1 LLAMA (G 700	PILOT HEAD 1 FLAME (G 700)	2	4	6	4				
S/Nº	U442130000	AMARRE TRASERO PI 978.009	REAR FASTEN. PI 978.009	2	4	6	4				
S/Nº	X012116000	TORNILLO AMA. 953.007	FAST. BOLT 953.007	2	4	6	4				
S/Nº	X012122000	REGULADOR AIRE 912.001	AIR CONTROL 912.001	2	4	6	4				
S/Nº	U442131000	AMARRE DELANTERO PI 978.021	FRONT FASTENING PI 978.021	2	4	6	4				
6	U222130000	TERMOPAR L=600	THERMOCOUPLE L=600	1	2	3	2				
S/Nº	U262130000	TERMOPAR L=1000	THERMOCOUPLE L=1000	1	2	3	2				
7	U025057000	TUBO PILOTO ANT. COMPLETO	FRONT PILOT PIPE COMPLETE	1	2	3	2				
8	U265033000	PORTATOBERAS Ø10	NOZZLE HOLDER Ø10	1	2	3	2				
	Q153002000	TORNILLO TAPON	CAP BOLT	1	2	3	2				
9	U025055000	CONDUC. QUEMADOR ANT. COMPL	FRONT BURNER PIPE COMPL.	1	2	3	2				
10	U912115000	GRIFO 18700 BY-PASS 0,75	TAP 18700 BY-PASS 0.75	1	2	3	2				
10	U912109000	GRIFO 18700 BY-PASS 1,15	TAP 18700 BY-PASS 1.15	1	1	2	1				
10	U912117000	GRIFO 18700 BY-PASS 1,45	TAP 18700 BY-PASS 1.45	_	1	1	1				
S/Nº	U912104000	BRIDA AMARRE GRIFO 1/2"	TAP FASTENING FLANGE 1/2"	2	4	6	4				
S/Nº	Q122032000	TORNILLO ALLEN M5x15	ALLEN BOLT M5x15	2	4	6	4				
11	U022117000	MANDO MONT COCINA GAS Ø8	GAS COOK. ASSEMBLY CTRL Ø8	2	4	6	4				
12	U015010000	DISTRIBUIDOR COMPLET. CG9-20	COMPL. DISTRIBUTOR CG9-20	1	_	_	_				
12	U025042000	DISTRIBUIDOR COMPLET. CG9-40	COMPL. DISTRIBUTOR CG9-40	_	1	_	_				
12	U075004000	DISTRIBUIDOR COMPLET. CG9-60	COMPL. DISTRIBUTOR CG9-60	_	_	1	_				
12	U225003000	DISTRIBUIDOR COMPLE. CGE9-41	COMPL. DISTRIBUTOR CGE9-41	_	_	_	1				

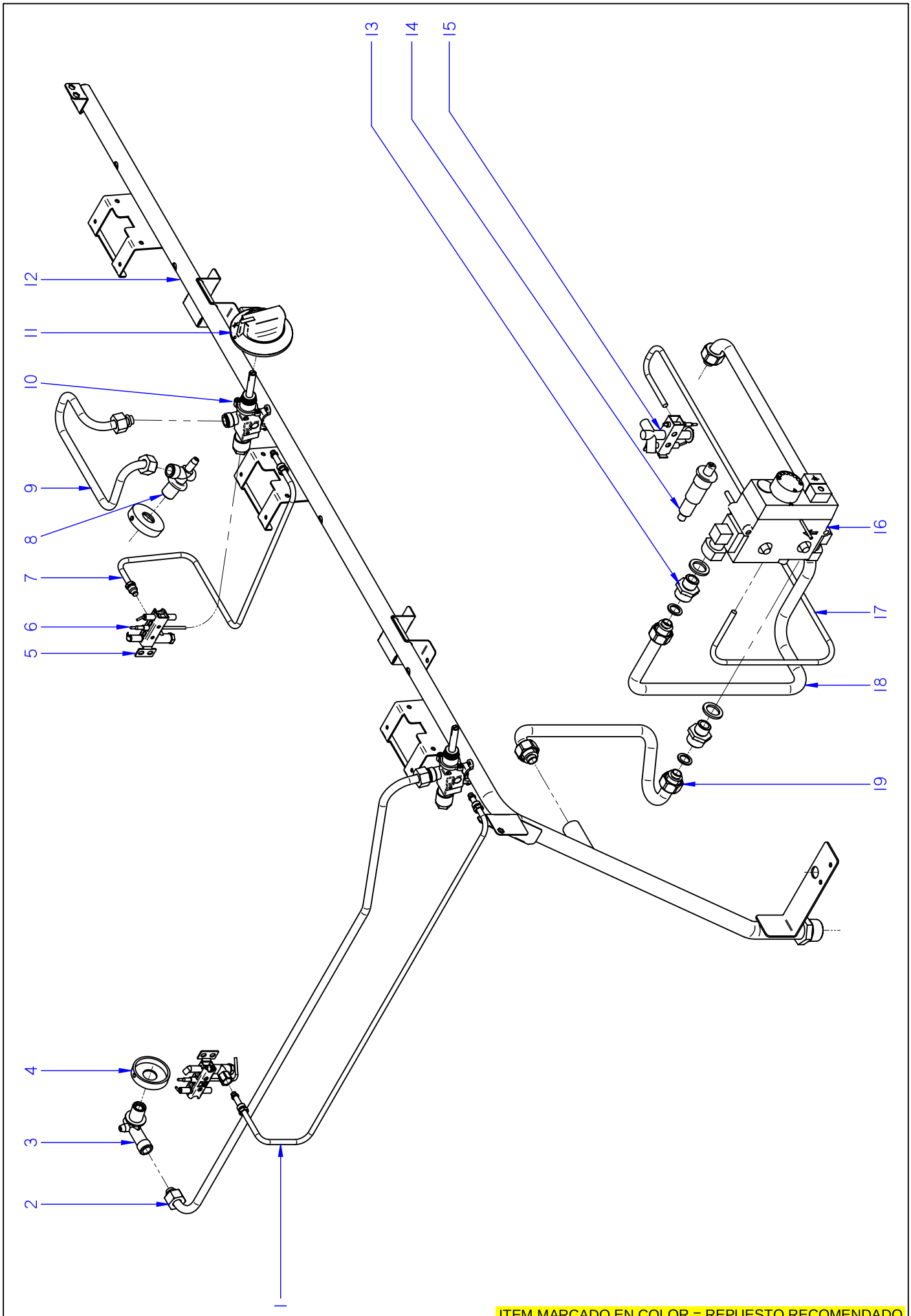

ITEM MARCADO EN COLOR = REPUESTO RECOMENDADO
COLOURED ITEM = RECOMMENDED SPARE PART

N plano	Firma	Fecha	Aparato		Lamina	
C-2345		2009-06	CONDUCCIONES Y GRIFOS COCINA CG9-41 / 61 / 82 / 61 OP		6	Fagor Industrial S.Coop. Oñate

MOD.	COCINAS	ZONA	CONDUCCIONES Y GRIFOS / PIPES AND TAPS	PLANO	C-2345

ITEM	CODIGO	DENOMINACION	TEXTO	CG9-41	CG9-61	CG9-82	CG9-61 OP				NOTAS
1	U025053000	TUBO PILOTO POST. COMPLETO	REAR PILOT PIPE COMPLETE	2	3	4	3				
2	U025059000	CON. QUEMADOR POSTER. COMP.	REAR BURNER UNIT COMP.	2	3	4	3				
3	U915014000	PORTATOBERAS HORNO	OVEN NOZZLE HOLDER	2	3	4	3				
	Q153002000	TORNILLO TAPON	CAP BOLT	2	3	4	3				
4	U022619000	POSICIONADOR PORTATOB. 4000	NOZZLE-HOLDER POSITION. 400	3	5	6	5				
S/Nº	U022620000	POSICIONADOR PORTATOB. G900	NOZZLE-HOLDER POSITION. G90	1	1	2	1				
5	_____	CONJUNTO PILOTO COMPLETO	COMPLETE PILOT UNIT	4	6	8	6				
S/Nº	X012126000	CUERPO SIN RAC. 901.210	BODY WITHOUT CONNEC. 901.21	4	6	8	6				
S/Nº	U442137000	INYECTOR Ø 0,4 GN	INJECTOR Ø 0.4 GN.	4	6	8	6				
S/Nº	U912107000	CABEZA PILOTO 1 LLAMA (G 700	PILOT HEAD 1 FLAME (G 700)	4	6	8	6				
S/Nº	U442130000	AMARRE TRASERO PI 978.009	REAR FASTEN. PI 978.009	4	6	8	6				
S/Nº	X012116000	TORNILLO AMA. 953.007	FAST. BOLT 953.007	4	6	8	6				
S/Nº	X012122000	REGULADOR AIRE 912.001	AIR CONTROL 912.001	4	6	8	6				
S/Nº	U442131000	AMARRE DELANTERO PI 978.021	FRONT FASTENING PI 978.021	4	6	8	6				
6	U222130000	TERMOPAR L=600	THERMOCOUPLE L=600	2	3	4	3				
S/Nº	U262130000	TERMOPAR L=1000	THERMOCOUPLE L=1000	2	3	4	3				
7	U025057000	TUBO PILOTO ANT. COMPLETO	FRONT PILOT PIPE COMPLETE	2	3	4	3				
8	U265033000	PORTATOBERAS Ø10	NOZZLE HOLDER Ø10	2	3	4	3				
	Q153002000	TORNILLO TAPON	CAP BOLT	2	3	4	3				
9	U025055000	CONDUC. QUEMADOR ANT. COMPL	FRONT BURNER PIPE COMPL.	2	3	4	3				
10	U912115000	GRIFO 18700 BY-PASS 0,75	TAP 18700 BY-PASS 0.75	2	3	4	3				
10	U912109000	GRIFO 18700 BY-PASS 1,15	TAP 18700 BY-PASS 1.15	1	2	2	2				
10	U912117000	GRIFO 18700 BY-PASS 1,45	TAP 18700 BY-PASS 1.45	1	1	2	1				
S/Nº	U912104000	BRIDA AMARRE GRIFO 1/2"	TAP FASTENING FLANGE 1/2"	4	6	8	6				
S/Nº	Q122032000	TORNILLO ALLEN M5x15	ALLEN BOLT M5x15	4	6	8	6				
11	U022117000	MANDO MONT COCINA GAS Ø8	GAS COOK. ASSEMBLY CTRL Ø8	4	6	8	6				
12	U025039000	DISTRIBUIDOR COMPLET. CG9-41	COMPLETE DISTRIBUTOR CG9-4	1	_	2	_				
12	U035004000	DISTRIBUIDOR COMPLET. CG9-61	COMPLETE DISTRIBUTOR CG9-6	_	1	_	1				
	Q221342000	REMACHE EXAGONAL M5	HEXAGONAL RIVET M5	2	2	8	2				
	Q152004000	TORNILLO APLASTADO M5x13	FLAT HEAD SCREW M5X13	2	2	8	2				

MOD.	COCINAS	ZONA	CONDUCCIONES Y GRIFOS / PIPES AND TAPS	PLANO	C-2345

ITEM	CODIGO	DENOMINACION	TEXTO	CG9-41	CG9-61	CG9-82	CG9-61 OP				NOTAS
13	U202103000	MANGUITO REDUCCION 1/2-3/8"	REDUCTION HOSE 1/2-3/8"	2	2	4	2				
	Q306058000	ARANDELA 25x17X2.5	WASHER 25x17X2.5	2	2	4	2				
14	S113034000	PIEZOELECTRICO	PIEZOELECTRIC	1	1	2	1				
S/Nº	U333003000	CABLE MASA ENCENDEDOR	LIGHTER EARTH CABLE	1	1	2	1				
S/Nº	U323030000	CABLE BUJIA	SPARK PLUG CABLE	1	1	2	1				
S/Nº	X022131000	BUJIA	SPARK PLUG	1	1	2	1				
15	U322118000	PILOTO COMPLETO 100.062	COMPLETE PILOT LIGHT 100,062	1	1	2	1				
S/Nº	U442137000	INYECTOR Ø 0,4 GN	INJECTOR Ø 0.4 GN.	1	1	2	1				
S/Nº	U562130000	TERMOPAR L=850	THERMOCOUPLE L=850	1	1	2	1				
	Q012031000	TORNILLO EXAGONAL M5x15 A304	HEXAGONAL BOLT M5x15 A304	2	2	4	2				
16	U134324000	VALVULA MINISIT 0710.654	VALVE MINISIT 0710.654	1	1	2	1				
S/Nº	Q307041000	JUNTA TORICA 25,4x20,2x2,6	O-RING 25.4x20.2x2.6	2	2	4	2				
S/Nº	U134317000	MANDO NEGRO MINI 916.124	BLACK CTRL. MINI 916.124	1	1	2	1				
S/Nº	U134318000	CUBIERTA MINISIT 903.052	COVER MINISIT 903.052	1	1	2	1				
S/Nº	Q031322000	TORNILLO ALOMADO M4x15	CURVED SCREW M4X15	8	8	16	8				
S/Nº	U264300000	RACOR 3/8 906,252	CONNECTION 3/8 906.252	2	2	4	2				
S/Nº	U134323000	RACORD BICONO 6 958.031	BICONE CONNECTION 6 958.031	1	1	2	1				
17	U025062000	TUBO PILOTO EUROSIT QUEM.	PILOT PIPE EUROSIT BURNER	1	1	2	_				
17	U105008000	TUBO PILOTO HORNO	PILOT PIPE BURNER	_	_	_	1				
	U134323000	RACORD BICONO 6 958.031	BICONE CONNECTION 6 958.031	2	2	4	2				
18	U025061000	TUBO COMPLETO EUROSIT QUEMA	COMPLETE PIPE EUROSIT BURN	1	1	2	_				
18	U105002000	TUBO COMPLETO QUEMADOR	COMPLETE PIPE BURNER	_	_	_	1				
19	U025050000	ENTRADA MINISIT COMPL CG900	INPUT MINISIT COMPL CG900	1	1	2	1				
	Q306062000	ARANDELA Ø13,9X10,33x1,5	WASHER Ø13.9X10.33x1.5	8	8	16	8				

MOD.	COCINAS	ZONA	CONDUCCIONES Y GRIFOS / PIPES AND TAPS	PLANO	C-2344 C-2345

ITEM	CODIGO	DENOMINACION	TEXTO	CG9-20 H	CG9-40 H	CG9-60 H	CG9-41 H	CG9-61 H			NOTAS
1	U025053000	TUBO PILOTO POST. COMPLETO	REAR PILOT PIPE COMPLETE	1	2	3	2	3			
2	U025059000	CON. QUEMADOR POSTER. COMP.	REAR BURNER UNIT COMP.	1	2	3	2	3			
3	U915014000	PORTATOBERAS HORNO	OVEN NOZZLE HOLDER	1	2	3	2	3			
	Q153002000	TORNILLO TAPON	CAP BOLT	1	2	3	2	3			
4	U022619000	POSICIONADOR PORTATOB. 4000	NOZZLE-HOLDER POSITION. 400	2	3	5	3	5			
S/Nº	U022620000	POSICIONADOR PORTATOB. G900	NOZZLE-HOLDER POSITION. G90	_	1	1	1	1			
5	_____	CONJUNTO PILOTO COMPLETO	COMPLETE PILOT UNIT	2	4	6	4	6			
S/Nº	X012126000	CUERPO SIN RAC. 901.210 B-P	BODY WITHOUT CONNEC. 901.21	2	4	6	4	6			
S/Nº	U442136000	CUERPO SIN RACORD G-N	BODY WITHOUT CONNEC. 901.21	2	4	6	4	6			
S/Nº	U442137000	INYECTOR Ø 0,4 G-N	INJECTOR Ø 0.4 GN.	2	4	6	4	6			
S/Nº	U912107000	CABEZA PILOTO 1 LLAMA (G 700	PILOT HEAD 1 FLAME (G 700)	2	4	6	4	6			
S/Nº	U442130000	AMARRE TRASERO PI 978.009	REAR FASTEN. PI 978.009	2	4	6	4	6			
S/Nº	X012116000	TORNILLO AMA. 953.007	FAST. BOLT 953.007	2	4	6	4	6			
S/Nº	X012122000	REGULADOR AIRE 912.001	AIR CONTROL 912.001	2	4	6	4	6			
S/Nº	U442131000	AMARRE DELANTERO PI 978.021	FRONT FASTENING PI 978.021	2	4	6	4	6			
6	U222130000	TERMOPAR L=600	THERMOCOUPLE L=600	1	2	3	2	3			
S/Nº	U262130000	TERMOPAR L=1000	THERMOCOUPLE L=1000	1	2	3	2	3			
7	U025057000	TUBO PILOTO ANT. COMPLETO	FRONT PILOT PIPE COMPLETE	1	2	3	2	3			
8	U265033000	PORTATOBERAS Ø10	NOZZLE HOLDER Ø10	1	2	3	2	3			
	Q153002000	TORNILLO TAPON	CAP BOLT	1	2	3	2	3			
9	U025055000	CONDUC. QUEMADOR ANT. COMPL	FRONT BURNER PIPE COMPL.	1	2	3	2	3			
10	U912109000	GRIFO 18700 BY-PASS 1,15	TAP 18700 BY-PASS 1.15	1	3	5	3	5			
10	U912117000	GRIFO 18700 BY-PASS 1,45	TAP 18700 BY-PASS 1.45	1	1	1	1	1			
S/Nº	U912104000	BRIDA AMARRE GRIFO 1/2"	TAP FASTENING FLANGE 1/2"	2	4	6	4	6			
S/Nº	Q122032000	TORNILLO ALLEN M5x15	ALLEN BOLT M5x15	2	4	6	4	6			
11	U022117000	MANDO MONT COCINA GAS Ø8	GAS COOK. ASSEMBLY CTRL Ø8	2	4	6	4	6			
12	U015010000	DISTRIBUIDOR COMPLET. CG9-20	COMPL. DISTRIBUTOR CG9-20	1	_	_	_	_			
12	U025042000	DISTRIBUIDOR COMPLET. CG9-40	COMPL. DISTRIBUTOR CG9-40	_	1	_	_	_			
12	U075004000	DISTRIBUIDOR COMPLET. CG9-60	COMPL. DISTRIBUTOR CG9-60	_	_	1	_	_			
12	U025039000	DISTRIBUIDOR COMPLET. CG9-41	COMPLETE DISTRIBUTOR CG9-4	_	_	_	1	_			
12	U035004000	DISTRIBUIDOR COMPLET. CG9-61	COMPLETE DISTRIBUTOR CG9-6	_	_	_	_	1			

MOD.	COCINAS	ZONA	CONDUCCIONES Y GRIFOS / PIPES AND TAPS	PLANO	C-2344 C-2345

ITEM	CODIGO	DENOMINACION	TEXTO	CG9-20 H	CG9-40 H	CG9-60 H	CG9-41 H	CG9-61 H			NOTAS
13	U202103000	MANGUITO REDUCCION 1/2-3/8"	REDUCTION HOSE 1/2-3/8"	_	_	_	2	2			
	Q306058000	ARANDELA 25x17X2.5	WASHER 25x17X2.5	_	_	_	2	2			
14	S113034000	PIEZOELECTRICO	PIEZOELECTRIC	_	_	_	1	1			
S/Nº	U333003000	CABLE MASA ENCENDEDOR	LIGHTER EARTH CABLE	_	_	_	1	1			
S/Nº	U323030000	CABLE BUJIA	SPARK PLUG CABLE	_	_	_	1	1			
S/Nº	X022131000	BUJIA	SPARK PLUG	_	_	_	1	1			
15	U322118000	PILOTO COMPLETO 100.062	COMPLETE PILOT LIGHT 100,062	_	_	_	1	1			
S/Nº	U442137000	INYECTOR Ø 0,4 GN	INJECTOR Ø 0.4 GN.	_	_	_	1	1			
S/Nº	U562130000	TERMOPAR L=850	THERMOCOUPLE L=850	_	_	_	1	1			
	Q012031000	TORNILLO EXAGONAL M5x15 A304	HEXAGONAL BOLT M5x15 A304	_	_	_	2	2			
16	U134324000	VALVULA MINISIT 0710.654	VALVE MINISIT 0710.654	_	_	_	1	1			
S/Nº	Q307041000	JUNTA TORICA 25,4x20,2x2,6	O-RING 25.4x20.2x2.6	_	_	_	2	2			
S/Nº	U134317000	MANDO NEGRO MINI 916.124	BLACK CTRL. MINI 916.124	_	_	_	1	1			
S/Nº	U134318000	CUBIERTA MINISIT 903.052	COVER MINISIT 903.052	_	_	_	1	1			
S/Nº	Q031322000	TORNILLO ALOMADO M4x15	CURVED SCREW M4X15	_	_	_	8	8			
S/Nº	U264300000	RACOR 3/8 906,252	CONNECTION 3/8 906.252	_	_	_	2	2			
S/Nº	U134323000	RACORD BICONO 6 958.031	BICONE CONNECTION 6 958.031	_	_	_	1	1			
17	U025062000	TUBO PILOTO EUROSIT QUEM.	PILOT PIPE EUROSIT BURNER	_	_	_	1	1			
17	U105008000	TUBO PILOTO HORNO	PILOT PIPE BURNER	_	_	_	_	_			
	U134323000	RACORD BICONO 6 958.031	BICONE CONNECTION 6 958.031	_	_	_	2	2			
18	U025061000	TUBO COMPLETO EUROSIT QUEMA	COMPLETE PIPE EUROSIT BURN	_	_	_	1	1			
18	U105002000	TUBO COMPLETO QUEMADOR	COMPLETE PIPE BURNER	_	_	_	_	_			
19	U025050000	ENTRADA MINISIT COMPL CG900	INPUT MINISIT COMPL CG900	_	_	_	1	1			
	Q306062000	ARANDELA Ø13,9X10,33x1,5	WASHER Ø13.9X10.33x1.5	_	_	_	8	8			

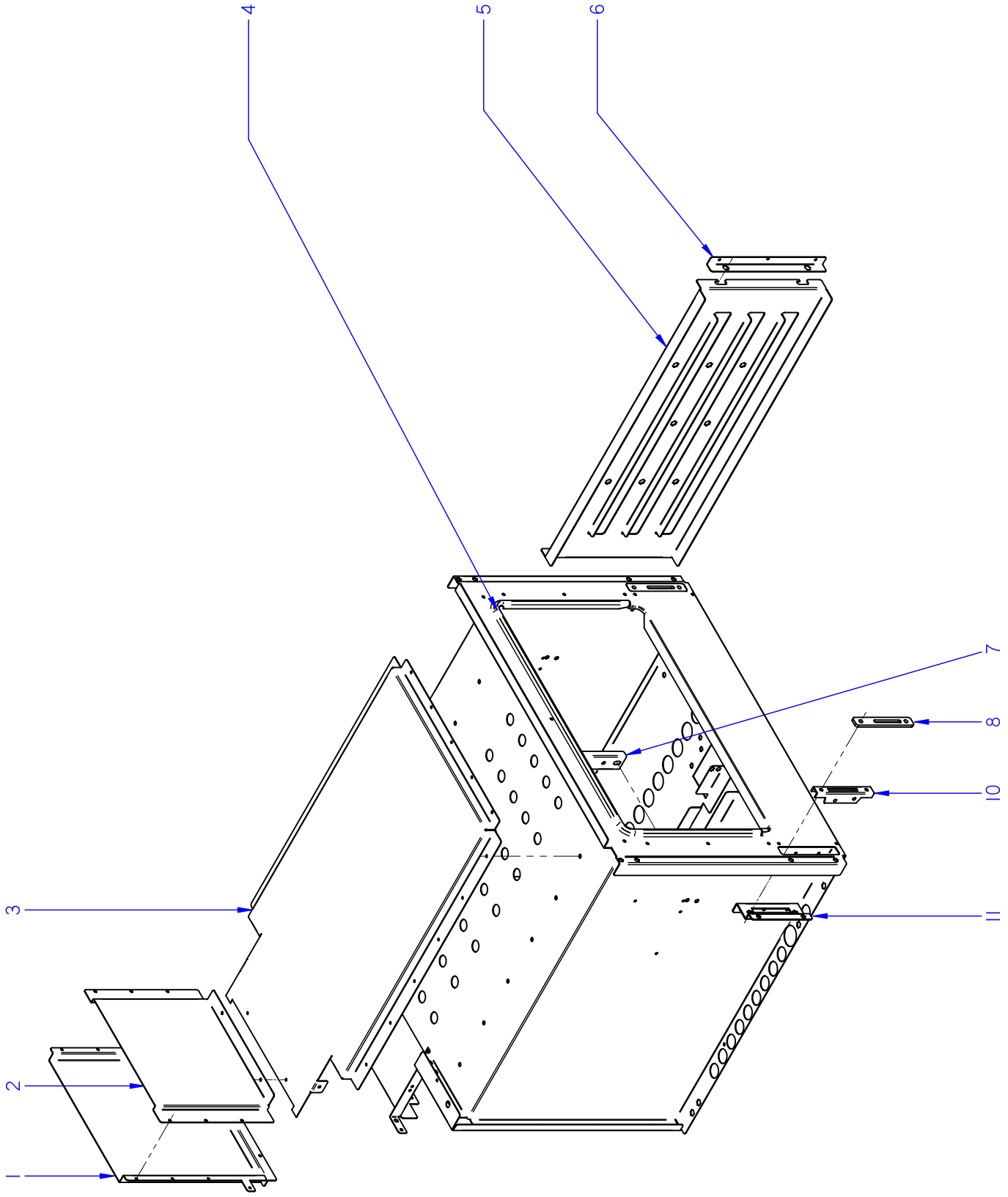

ITEM MARCADO EN COLOR = REPUESTO RECOMENDADO
COLOURED ITEM = RECOMMENDED SPARE PART

N plano	Firma	Fecha	Aparato	HORNO	Lamina	
C-2346		2009-06	COCINA CG9-41 / CG9-61 / CG9-82		7	Fagor Industrial S.Coop. Oñate FAGOR

MOD.	COCINAS	ZONA	HORNO / OVEN	PLANO	C-2346

ITEM	CODIGO	DENOMINACION	TEXTO	CG9-41	CG9-61	CG9-82					NOTAS
1	U025638000	POSTERIOR CHIMENEA G900	REAR FLUEPIPE G900	1	1	2					
	Q419005000	REMACHE 4x8 ALMG3 / ALUMINIO	RIVET 4X8 ALMG3 / ALUMINIUM	14	14	28					
2	U025637000	CHIMENEA ANTERIOR G900	FRONT FLUEPIPE G900	1	1	2					
3	U022615000	CAMARA DE HUMOS G900	SMOKE CHAMBER G900	1	1	2					
	Q419005000	REMACHE 4x8 ALMG3 / ALUMINIO	RIVET 4X8 ALMG3 / ALUMINIUM	19	19	38					
4	U025623000	JUNTA PUERTA HORNO INOX	OVEN DOOR SEAL INOX.	1	1	2					
5	U915607000	GUIA LATERAL HORNO G700	OVEN SIDE GUIDE G700	2	2	4					
	Q151336000	TORNILLO SOPORTE GUIAS	GUIDE SUPPORT BOLT	4	4	8					
	Q302022000	ARANDELA 16X6X1.2 A.304	WASHER 16X6X1.2 A.304	4	4	8					
	Q221321000	REMACHE ROSCAD.NUTSERT.M6	THREADED RIVET .NUTSERT.M6	4	4	8					
6	U915616000	SUPLEMENTO AMARRE GUIA LAT.	SIDE GUIDE FAST. SUPPL.	2	2	4					
	Q412000000	REMACHE TUBULAR 4x8	TUBULAR RIVET 4x8	6	6	12					
7	U055644000	FIJACION BULBO	FASTENING BULB	1	1	2					
	Q412000000	REMACHE TUBULAR 4x8	TUBULAR RIVET 4x8	2	2	4					
8	U915619000	EMBELLECED GUIA BISAGRA	HINGE GUIDE TRIM	2	2	4					
	Q152045000	TORNILLO AMARRE M6X25	FASTENING BOLT M6X25	4	4	4					
9	U010512000	GUIA DE BISAGRA	HINGE GUIDE	2	2	4					
10	U915604000	AMARRE GUIA BISAGRA HORNO	OVEN HINGE GUIDE FASTENING	2	2	4					
	Q221342000	REMACHE EXAGONAL M5	HEXAGONAL RIVET M5	2	2	4					
	Q412000000	REMACHE TUBULAR 4x8	TUBULAR RIVET 4x8	6	6	12					
	Q222042000	REMACHE EXAGONAL ROSCA M6	HEXAGONAL RIVET THREAD M6	4	4	8					

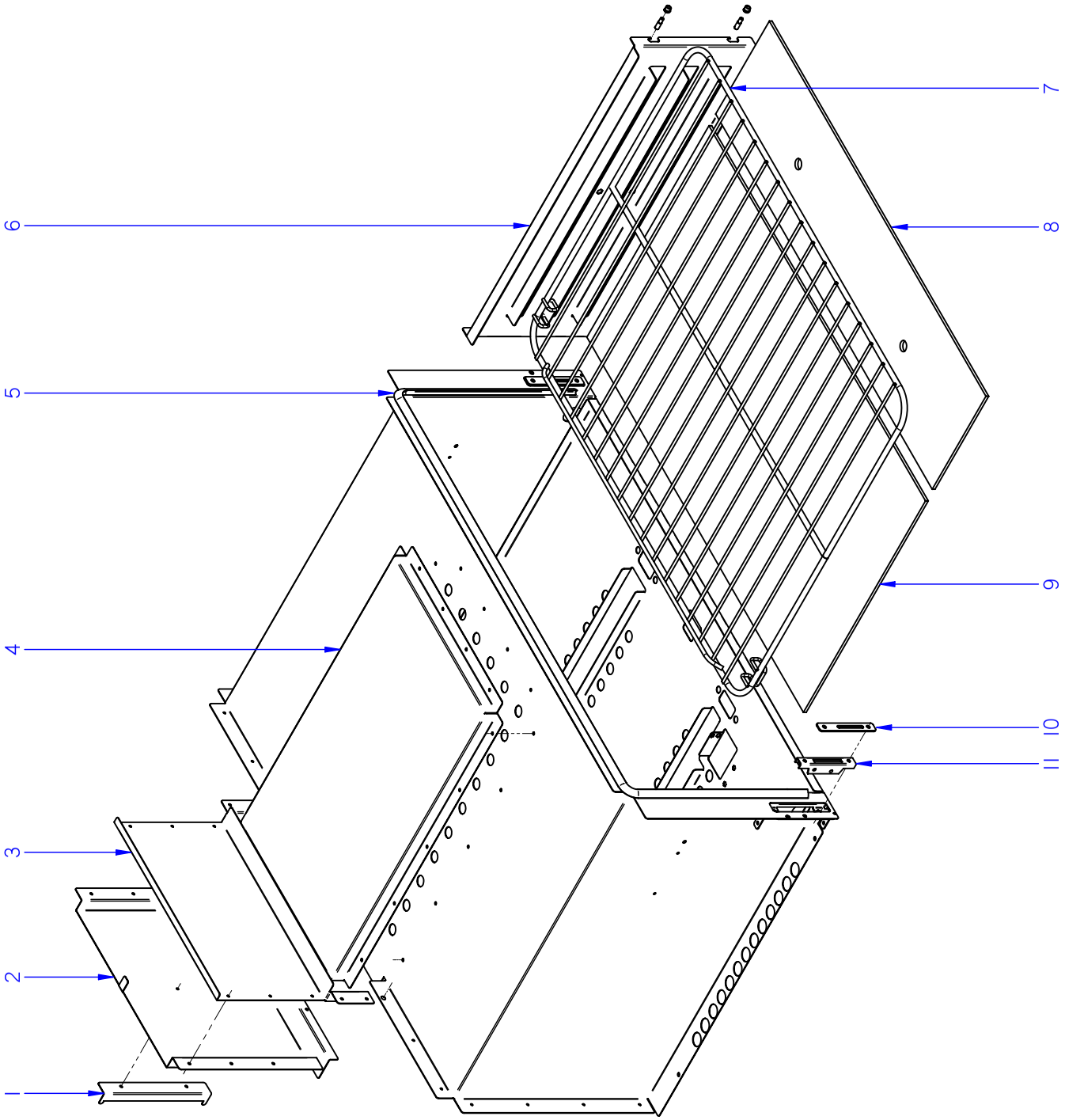

ITEM MARCADO EN COLOR = REPUESTO RECOMENDADO
COLOURED ITEM = RECOMMENDED SPARE PART

N plano	Firma	Fecha	Aparato	HORNO	Lamina	
C-2347		2009-06	COCINA CG9-61 OP		8	Fagor Industrial S.Coop. FAGOR Oñate

MOD.	COCINAS	ZONA	HORNO / OVEN	PLANO	C-2347

ITEM	CODIGO	DENOMINACION	TEXTO	CG9-61 OP							NOTAS
1	U105627000	DISTANCIA POSTER. CHIMENEA	REAR DISTANCE FLUEPIPE	1							
	Q412000000	REMACHE TUBULAR 4 x 8	TUBULAR RIVET 4 x 8	2							
2	U105616000	CHIMENEA PARTE EXTERIOR(HG)	EXTERIOR PART FLUEPIPE (HG)	1							
3	U105617000	CHIMENEA PARTE INTERIOR(HG)	INTERIOR PART FLUEPIPE (HG)	1							
	Q412000000	REMACHE TUBULAR 4 x 8	TUBULAR RIVET 4 x 8	14							
4	U105615000	CAMARA HUMOS HORNO (HG)	OVEN SMOKE CHAMBER (HG)	1							
	Q412000000	REMACHE TUBULAR 4 x 8	TUBULAR RIVET 4 x 8	17							
5	U105605000	JUNTA PUERTA HG (INOX)	HG DOOR SEAL INOX.	1							
6	U105611000	GUIA LATERAL HORNO(HG)	OVEN SIDE GUIDE (HG)	2							
	Q151336000	TORNILLO SOPORTE GUIAS	GUIDE SUPPORT BOLT	4							
	Q222042000	REMACHE EXAGONAL ROSCA M6	HEXAGONAL RIVET THREAD M6	4							
	Q042043000	TORNILLO AVELLANADO M6X20	COUNTERSUNK BOLT M6x20	4							
7	U105624000	PARRILLA COMPLETA HG	COMPLETE GRILLE HG	1							
8	U105614000	SOLERA PEQUEÑA HORNO (HG)	SMALL OVEN FLOOR (HG)	1							
9	U105613000	SOLERA HORNO GRANDE G 700	LARGE OVEN FLOOR G 700	1							
10	U105620000	EMBELLECEDOR GUIA BISAGRA	HINGE GUIDE TRIM	2							
	Q152045000	TORNILLO AMARRE M6X25	FASTENING BOLT M6X25	4							
11	U010512000	GUIA DE BISAGRA	HINGE GUIDE	2							

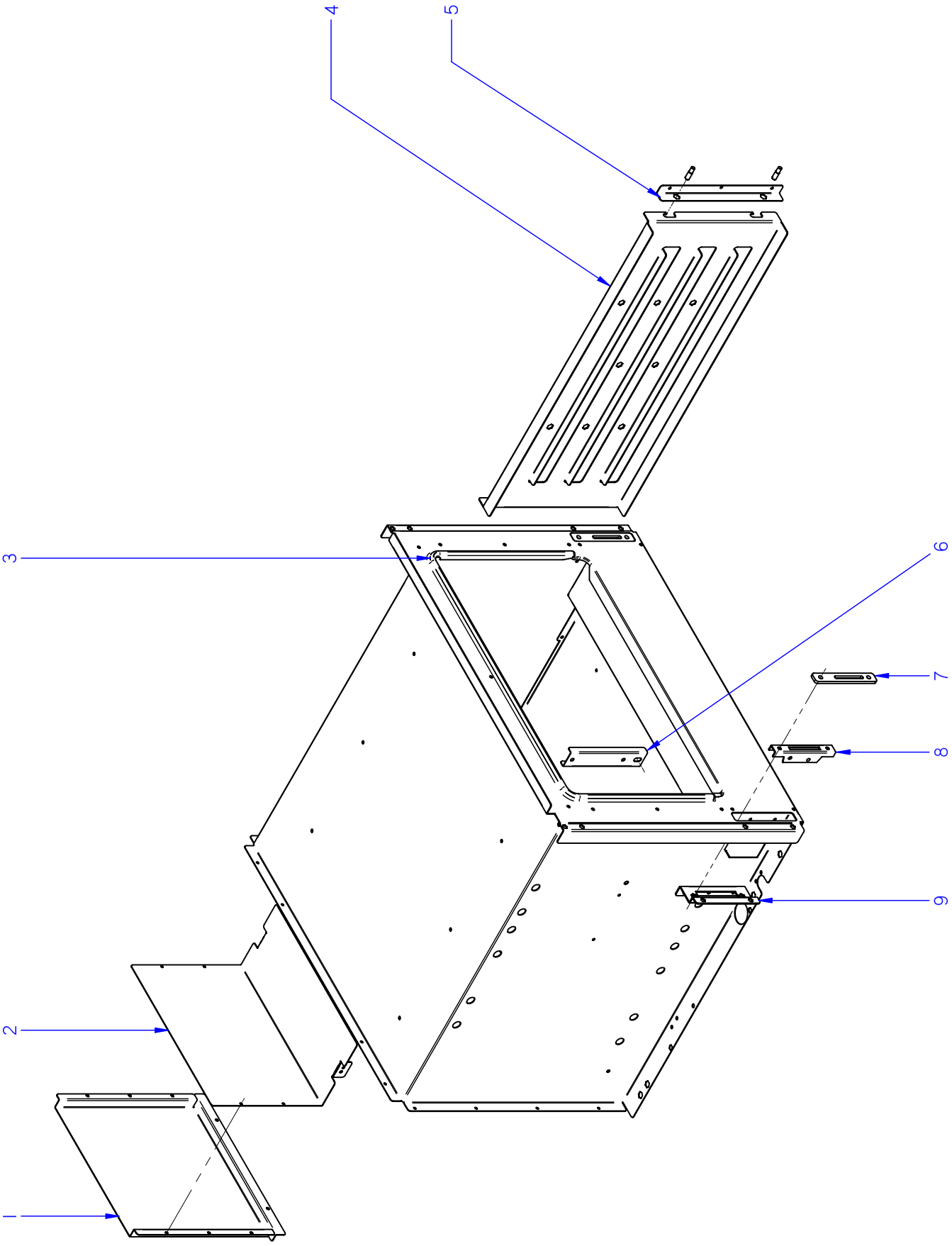

ITEM MARCADO EN COLOR = REPUESTO RECOMENDADO
COLOURED ITEM = RECOMMENDED SPARE PART

N plano	Firma	Fecha	Aparato	HORNO	Lamina	
C-2348		2009-06	COCINA CGE9-41		9	Fagor Industrial S.Coop. Oñate FAGOR

MOD.	COCINAS	ZONA	HORNO / OVEN	PLANO	C-2348

ITEM	CODIGO	DENOMINACION	TEXTO	CGE9-41							NOTAS
1	U675614000	POSTERIOR CHIMENEA CGE9-41	REAR FLUEPIPE CGE9-41	1							
	Q419005000	REMACHE 4x8 ALMG3 / ALUMINIO	RIVET 4X8 ALMG3 / ALUMINIUM	16							
2	U675615000	ANTERIOR DE CHIMENEA CGE9-41	FRONT FLUEPIPE CGE9-41	1							
3	U025623000	JUNTA PUERTA HORNO INOX	OVEN DOOR SEAL INOX.	1							
4	U915607000	GUIA LATERAL HORNO G700	OVEN SIDE GUIDE G700	2							
	Q151336000	TORNILLO SOPORTE GUIAS	GUIDE SUPPORT BOLT	4							
	Q302022000	ARANDELA 16X6X1.2 A.304	WASHER 16X6X1.2 A.304	4							
	Q221321000	REMACHE ROSCAD.NUTSERT.M6	THREADED RIVET .NUTSERT.M6	4							
5	U915616000	SUPLEMENTO AMARRE GUIA LAT.	SIDE GUIDE FAST. SUPPL.	2							
	Q412000000	REMACHE TUBULAR 4x8	TUBULAR RIVET 4x8	6							
6	U055644000	FIJACION BULBO	FASTENING BULB	1							
	Q412000000	REMACHE TUBULAR 4x8	TUBULAR RIVET 4x8	2							
7	U915619000	EMBELLECED GUIA BISAGRA	HINGE GUIDE TRIM	2							
	Q152045000	TORNILLO AMARRE M6X25	FASTENING BOLT M6X25	4							
8	U010512000	GUIA DE BISAGRA	HINGE GUIDE	2							
9	U915604000	AMARRE GUIA BISAGRA HORNO	OVEN HINGE GUIDE FASTENING	2							
	Q221342000	REMACHE EXAGONAL M5	HEXAGONAL RIVET M5	2							
	Q412000000	REMACHE TUBULAR 4x8	TUBULAR RIVET 4x8	6							
	Q222042000	REMACHE EXAGONAL ROSCA M6	HEXAGONAL RIVET THREAD M6	4							

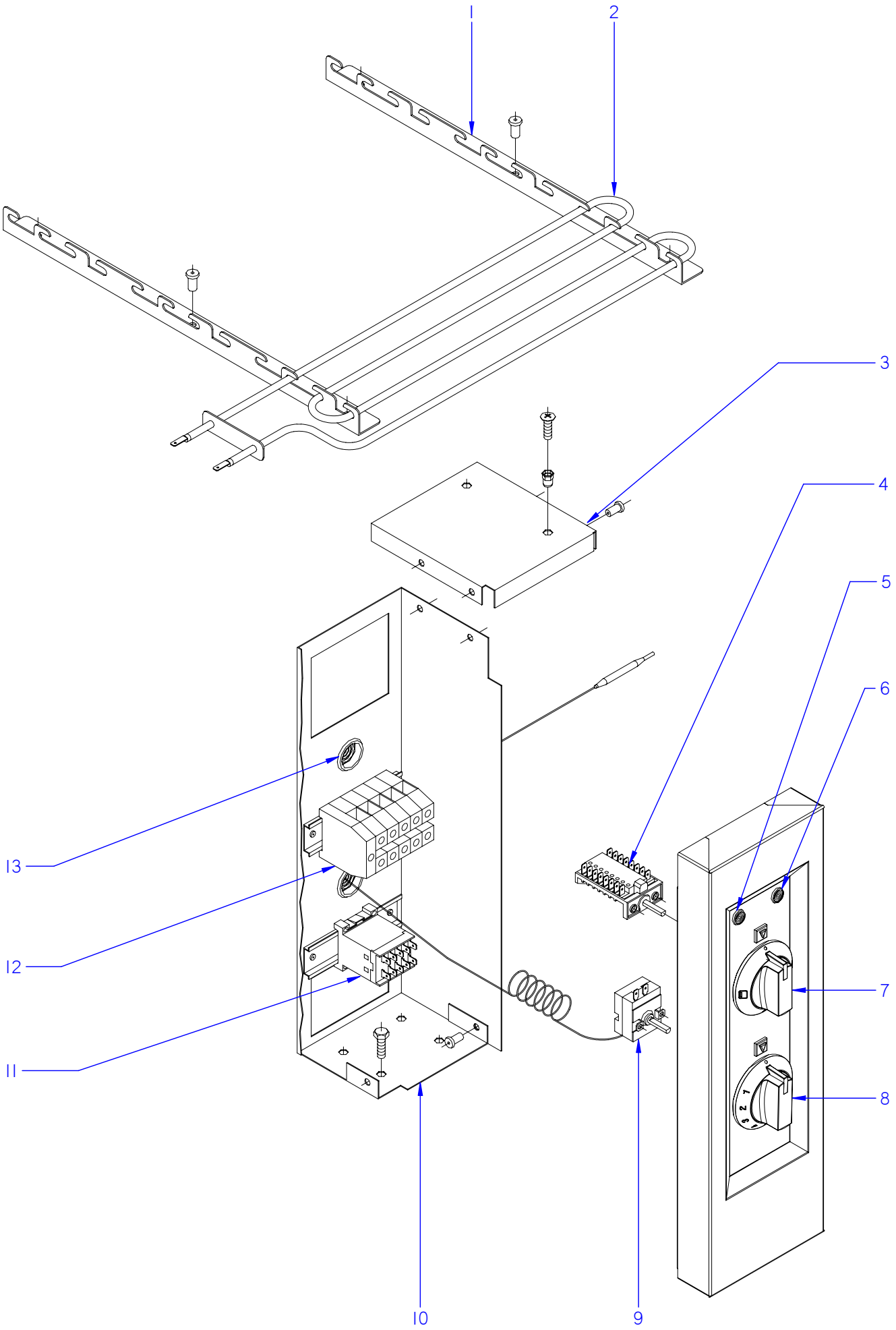

ITEM MARCADO EN COLOR = REPUESTO RECOMENDADO
COLOURED ITEM = RECOMMENDED SPARE PART

N plano	Firma	Fecha	Aparato	CONJUNTO FUNCIONAL ELECTRICO	Lamina	
C-2349		2009-06	COCINA CGE9-41		10	Fagor Industrial S.Coop. FAGOR Onate

MOD.	COCINAS	ZONA	CONJUNTO FUNCIONAL ELECTRICO	PLANO	C-2349

ITEM	CODIGO	DENOMINACION	TEXTO	CGE9-41							NOTAS
1	U805613000	ESCUADRA SOPOR. RESISTENCIAS	SUPP. BRACKET RESISTORS	4							
	Q419005000	REMACHE 4x8 ALMG3 / ALUMINIO	RIVET 4X8 ALMG3 / ALUMINIUM	12							
2	U803004000	RESISTENCIA 1000W/230V	RESISTOR 1000W -230V	6							
3	U673051000	TAPA DE CUADRO ELECTRICO	ELECTRIC PANEL COVER	1							
	Q419005000	REMACHE 4x8 ALMG3 / ALUMINIO	RIVET 4X8 ALMG3 / ALUMINIUM	4							
	Q419005000	REMACHE 4x8 ALMG3 / ALUMINIO	RIVET 4X8 ALMG3 / ALUMINIUM	2							
	Q221342000	REMACHE EXAGONAL M5	HEXAGONAL RIVET M5	2							
	Q012032000	TORNILLO EXAGONAL M5x15 A304	HEXAGONAL BOLT M5x15	2							
	Q012032000	TORNILLO EXAGONAL M5x15 A304	HEXAGONAL BOLT M5x15	2							
4	U673006000	CONMUTADOR	SWITCH	1							
	Q151320000	TORNILLO ALOMADO M4x6 H.ZINC.	CURVED SCREW M4X6 H. ZINC	2							
5	R693055000	PILOTO VERDE 41227000C7	GREEN PILOT 41227000C7	1							
6	R693056000	PILOTO AMBAR	AMBER PILOT	1							
7	U173006000	MANDO MONTADO CE Ø6	CONTROL CE Ø6	1							
8	U173005000	MANDO CE Ø6 TERMOSTATO	CONTROL Ø6 THERMOSTAT	1							
9	X153000000	TERMOSTATO 50-310º C	THERMOSTAT 50-310 C	1							
	Q151320000	TORNILLO ALOMADO M4x6 H.ZINC.	CURVED SCREW M4X6 H. ZINC	2							
10	U673050000	CUADRO ELECTRICO	ELECTRICAL PANEL	1							
11	Z213007000	CONTACTOR 3TF2010-3AL2	CONTACTOR 3TF2010-3AL2	1							
	R663055000	GUIA CONTACTOR L-120	CONTACTOR GUIDE L-120	1							
	Q419005000	REMACHE 4x8 ALMG3 / ALUMINIO	RIVET 4X8 ALMG3 / ALUMINIUM	4							
12	P453025000	BORNES 10 WDU-10203.0	TERMINALS 10 WDU-10203.0	3							
	U803009000	BORNA PASO AZUL 16 MM.	BLUE TAP TERMINAL 16MM	1							
	P453026000	BORNA TIERRA 10 WPE-10103.0	TERMINAL TIER 10 WPE-10103.O	1							
	Z263303000	TOPE FINAL	END STOP	1							
	R663055000	GUIA CONTACTOR L-120	CONTACTOR GUIDE L-120	1							
13	X723014000	PASAMUROS AMETRO 30		2							

MOD.	COCINAS	ZONA	VARIOS / MISCELLANEOUS	PLANO	

ITEM	CODIGO	DENOMINACION	TEXTO	CG9-20	CG9-40	CG9-60	CG9-41	CG9-61	CG9-82	CG9-61 OP	CGE9-41	NOTAS
	U026508000	FOLLETO DE INSTRUCIONES CG	INSTRUCTION LEAFLET CG	1	1	1	1	1	1	1	1	
	U673054000	ESQUEMA TEORICO ADHESIVO	THEOR. DIAGRAM LABEL	_	_	_	_	_	_	_	1	PLANO HC-76539
	U673008000	CABLEADO HORNO	OVEN WIRING	_	_	_	_	_	_	_	1	

MOD.	COCINAS	ZONA	PIEZAS ESPECIFICAS PARA LA VERSION AUSTRALIA	PLANO	

ITEM	CODIGO	DENOMINACION	TEXTO	CG9-20 A	CG9-40 A	CG9-60 A	CG9-41 A	CG9-61 A	CG9-82 A		NOTAS
		PIEZAS A ELIMINAR	**PARTS TO BE REMOVED**								
2	U112402000	TOBERA Ø 2,10 GN (8000)	NOZZLE Ø 2,10 GN (8000)	1	1	2	1	2	2		PLANO C-2342 / 43
8	U112401000	TOBERA Ø 1,55 BP (10500)	NOZZLE Ø 1.55 BP (10500)	_	1	1	1	1	2		PLANO C-2342 / 43
8	631600000	TOBERA Ø 2,40 GN (10500)	NOZZLE Ø 2.40 GN (10500)	_	1	1	1	1	2		PLANO C-2342 / 43
9	U235706000	VENTURI 10.500	VENTURI 10,500	_	1	1	1	1	2		PLANO C-2342 / 43
10	U025706000	REGULADOR DE AIRE 10.000	AIR CONTROL 10.000	_	1	1	1	1	2		PLANO C-2342 / 43
11	U025711000	CUERPO QUEMADOR 10.000Kcal/H	BURNER BODY 10,000 Kcal/H	_	1	1	1	1	2		PLANO C-2342 / 43
12	U235701500	DIFUSOR 10.500 Kcal/H	DIFFUSER 10.500 Kcal/H	_	1	1	1	1	2		PLANO C-2342 / 43
14	U025712000	PROTEC. PILOTO QUEMAD. 4000	BURNER PILOT GUARD 4000	1	2	3	2	3	4		PLANO C-2342 / 43
15	U445731500	QUEMADOR 4000 (00545-010)	BURNER 4000 (00545-010)	1	2	3	2	3	4		PLANO C-2342 / 43
16	U025709000	CUERPO QUEMADOR 4000Kcal/H	BURNER BODY 4000 Kcal/H	1	2	3	2	3	4		PLANO C-2342 / 43
18	U125720000	VENTURI QUEMADOR 4000 kcl	VENTURI BURNER 4000 kcl	1	2	3	2	3	4		PLANO C-2342 / 43
19	X312400000	TOBERA Ø 1,10 BP (4000)	NOZZLE Ø 1.10 BP (4000)	1	2	3	2	3	4		PLANO C-2342 / 43
19	R302400000	TOBERA Ø 1,65 GN (4000)	NOZZLE Ø 1.65 GN (4000)	1	2	3	2	3	4		PLANO C-2342 / 43
S/Nº	U022620000	POSICIONADOR PORTATOB. G900	NOZZLE-HOLDER POSITION. G9	_	1	1	1	1	2		PLANO C-2344
10	U912115000	GRIFO 18700 BY-PASS 0,75	TAP 18700 BY-PASS 0.75	1	2	3	2	3	4		PLANO C-2344
10	U912117000	GRIFO 18700 BY-PASS 1,45	TAP 18700 BY-PASS 1.45	_	1	1	1	1	2		PLANO C-2344
		PIEZAS A INTRODUCIR	**PARTS TO BE INCLUDED**								
2	631000000	TOBERA Ø 1,40 BP (8000)	NOZZLE Ø 1.40 BP (8000)	1	3	4	3	4	6		PLANO C-2342 / 43
2	U054400000	TOBERA Ø 2,50 GN (8000)	NOZZLE Ø 2,50 GN (8000)	1	4	6	4	6	8		PLANO C-2342 / 43
3	U565700000	VENTURI QUEMADOR 8000	VENTURI BURNER 8000	1	3	4	3	4	6		PLANO C-2342 / 43
4	U265702000	REGULADOR AIRE	AIR CONTROLLER	_	1	1	1	1	2		PLANO C-2342 / 43
5	U025710000	CUERPO QUEMADOR 8000 Kcal/H	BURNER BODY 8000 Kcal/h	1	3	4	3	4	6		PLANO C-2342 / 43
6	U915703000	PROTEC. PILOTO QUEMAD. 7000	BURNER PILOT GUARD 7000	_	2	3	2	3	4		PLANO C-2342 / 43
7	U135702500	QUEMADOR 8000	BURNER 8000	1	3	4	3	4	6		PLANO C-2342 / 43
4	U022619000	POSICIONADOR PORTATOB. 4000	NOZZLE-HOLDER POSITION. 40	_	1	1	1	1	2		PLANO C-2344
10	U912109000	GRIFO 18700 BY-PASS 1,15	TAP 18700 BY-PASS 1.15	1	3	4	3	4	6		PLANO C-2344

MOD.	COCINAS	ZONA	PIEZAS ESPECIFICAS PARA LA VERSION ITALIA	PLANO	

ITEM	CODIGO	DENOMINACION	TEXTO	CG9-40 I	CG9-60 I	CG9-41 I	CG9-61 I	CG9-82 I			NOTAS
		PIEZAS A ELIMINAR	**PARTS TO BE REMOVED**								
6	U915703000	PROTEC. PILOTO QUEMAD. 7000	BURNER PILOT GUARD 7000	1	1	1	1	2			PLANO C-2342 / 43
8	U112401000	TOBERA Ø 1,55 BP (10500)	NOZZLE Ø 1.55 BP (10500)	1	1	1	1	2			PLANO C-2342 / 43
8	631600000	TOBERA Ø 2,40 GN (10500)	NOZZLE Ø 2.40 GN (10500)	1	1	1	1	2			PLANO C-2342 / 43
9	U235706000	VENTURI 10.500	VENTURI 10,500	1	1	1	1	2			PLANO C-2342 / 43
10	U025706000	REGULADOR DE AIRE 10.000	AIR CONTROL 10.000	1	1	1	1	2			PLANO C-2342 / 43
11	U025711000	CUERPO QUEMADOR 10.000Kcal/H	BURNER BODY 10,000 Kcal/H	1	1	1	1	2			PLANO C-2342 / 43
12	U235701500	DIFUSOR 10.500 Kcal/H	DIFFUSER 10.500 Kcal/H	1	1	1	1	2			PLANO C-2342 / 43
S/Nº	U022620000	POSICIONADOR PORTATOB. G900	NOZZLE-HOLDER POSITION. G9	1	1	1	1	2			PLANO C-2344
10	U912117000	GRIFO 18700 BY-PASS 1,45	TAP 18700 BY-PASS 1.45	1	1	1	1	2			PLANO C-2344
		PIEZAS A INTRODUCIR	**PARTS TO BE INCLUDED**								
14	U025712000	PROTEC. PILOTO QUEMAD. 4000	BURNER PILOT GUARD 4000	_	1	_	1	_			PLANO C-2342 / 43
15	U445731500	QUEMADOR 4000 (00545-010)	BURNER 4000 (00545-010)	1	1	1	1	2			PLANO C-2342 / 43
16	U025709000	CUERPO QUEMADOR 4000Kcal/H	BURNER BODY 4000 Kcal/H	1	1	1	1	2			PLANO C-2342 / 43
18	U125720000	VENTURI QUEMADOR 4000 kcl	VENTURI BURNER 4000 kcl	1	1	1	1	2			PLANO C-2342 / 43
19	X312400000	TOBERA Ø 1,10 BP (4000)	NOZZLE Ø 1.10 BP (4000)	1	1	1	1	2			PLANO C-2342 / 43
19	R302400000	TOBERA Ø 1,65 GN (4000)	NOZZLE Ø 1.65 GN (4000)	1	1	1	1	2			PLANO C-2342 / 43
4	U022619000	POSICIONADOR PORTATOB. 4000	NOZZLE-HOLDER POSITION. 40	1	1	1	1	2			PLANO C-2344
10	U912115000	GRIFO 18700 BY-PASS 0,75	TAP 18700 BY-PASS 0.75	1	1	1	1	2			PLANO C-2344

HE9-10

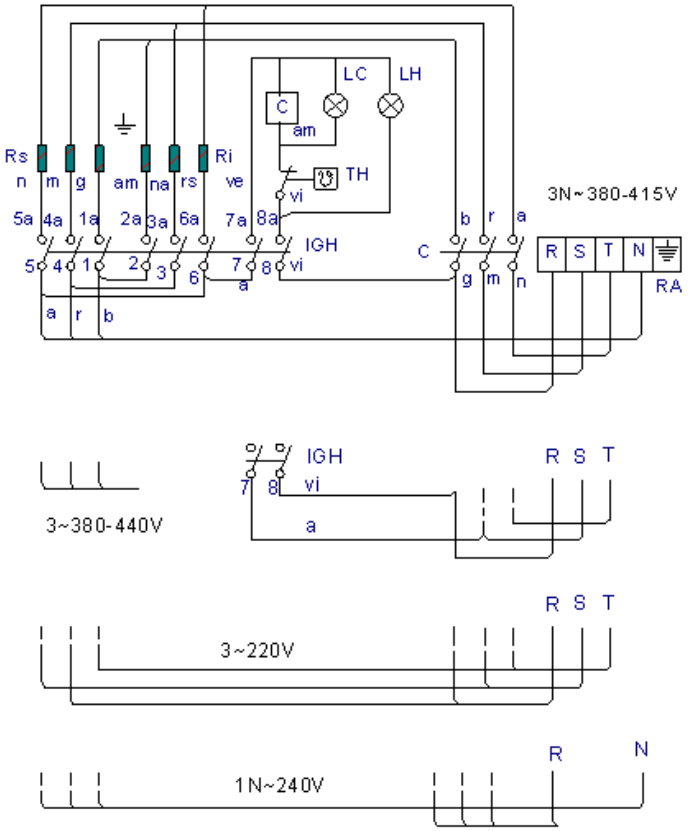

RA: Regleta de Alimentacion

IGH :Conmutador General Horno

C: Contactor

LC : Lampara Calentamiento Horno

LH: Lampara Horno Encendido

TH : Termostato de Horno

Rs : Resistencia Horno Superior

Ri : Resistencia Horno Inferior

r = rojo-red-rouge
m = marron-brown-marron
g = gris-grey-gris
n = negro-black-noir
a = azul-blue-bleu
b = blanco-white-blanc
vi = violeta-violette-violet
am = amarillo-yellow-jaune
na = naranja-orange-orange
rs = rosa-rose-pink
ve = verde-green-vert
am/ve = amarillo/verde-yellow/green-jaune/vert

	1 _ 2 1a 2a	3 _ 4 3a 4a	5 _ 6 5a 6a	7 7a	8 8a
0					
1	X	X	X	X	X
2	X	X	X	X	X
3		X	X	X	X

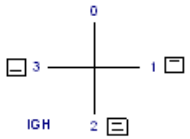

U673054

	Esquema teorico adhesivo			U-673054000		
N°	Pieza	Cant.	Material	N° Clasificacion	Acabado	
N°	Modificacion		Propuesta de	Fecha	Tolerancias generales	
					<5±	50–100± :
					5–25± :	>100±
					25–50± :	OX±

	Firma	Fecha
Dibujado	M.Arrillo	01-11-2002
Proyectado		
Comprobado		

FAGOR

Fagor Industrial,Koop.Elk., Mugarra

Escala: 1/1

Mecanizado superficial

COCINAS HE9-10

Plano numero: HC-76539

Sustituye al N°

Sustituido por

Planos bajo dalle reales y verificados por ingeniería