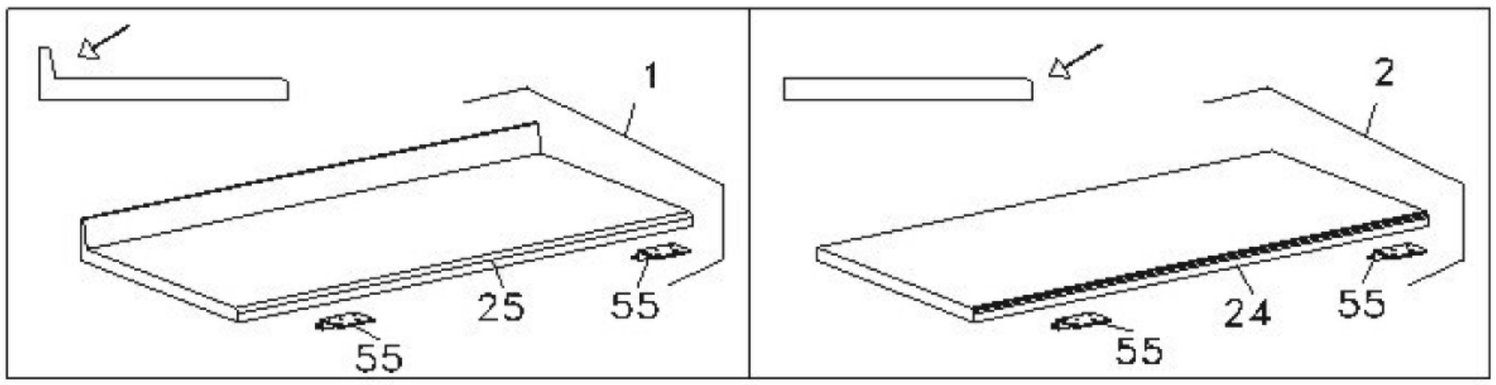
1
25
55
55
2
24
55
55

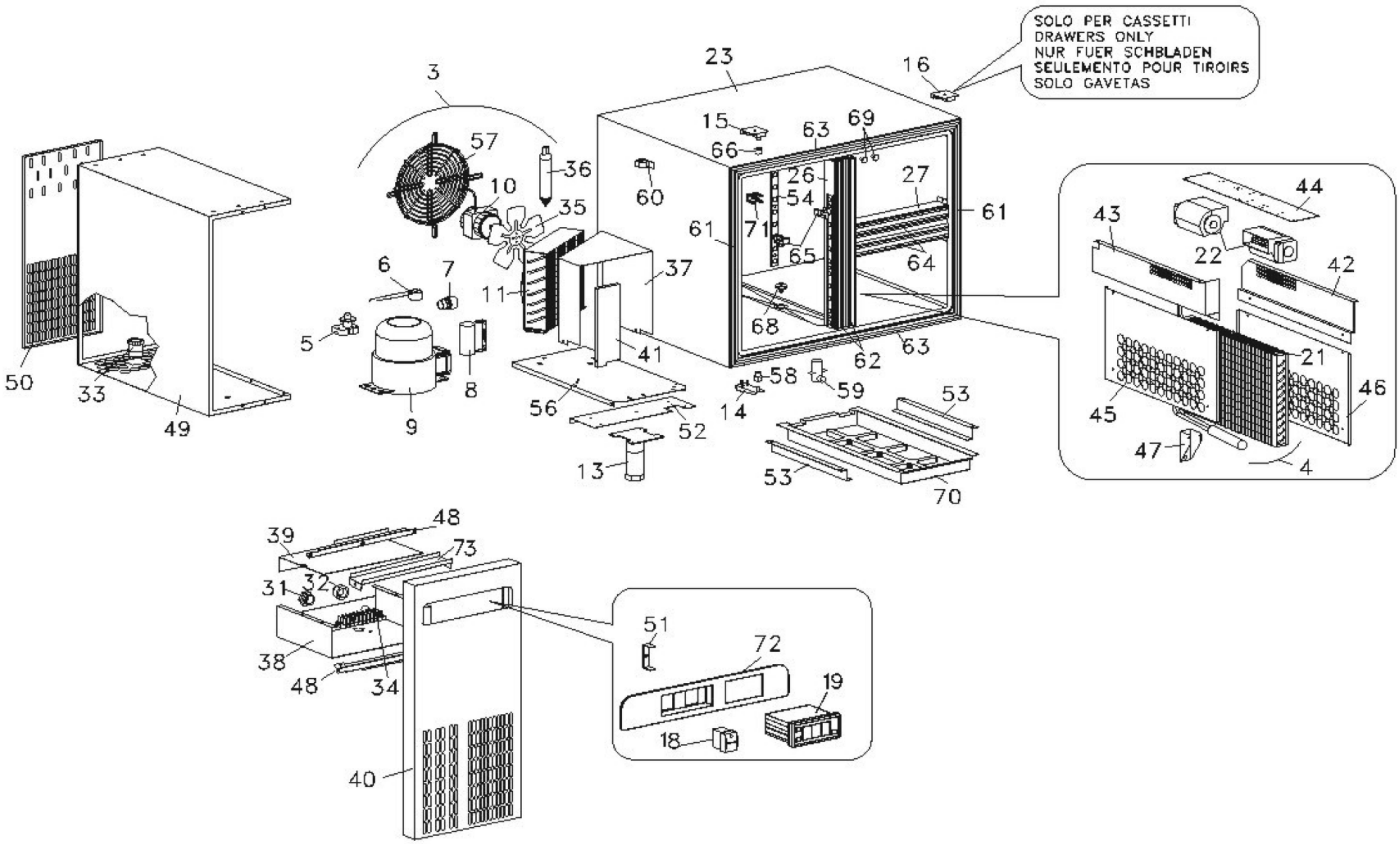
SOLO PER CASSETTI
DRAWERS ONLY
NUR FUER SCHBLADEN
SEULEMENTO POUR TIROIRS
SOLO GAVETAS
3
23
16
15
63
69
66
57
36
10
35
60
26
54
27
61
61
71
65
64
6
7
11
37
68
62
63
5
41
58
59
50
33
49
9
8
56
52
14
53
13
53
70
44
43
22
42
21
46
45
47
4
48
39
73
31
32
38
48
34
40
51
72
19
18

Modello Typ Model Modele Modelo

		EXM1A EXM1A/X EXM1A/A	EXM1A/2 EXM1A/2X EXM1A/2A	EXM1B EXM1B/X EXM1B/A	EXM1B/2 EXM1B/2X EXM1B/2A	EXM1B/4 EXM1B/4X EXM1B/4A	EXM1C EXM1C/X EXM1C/A	EXM1C/2 EXM1C/2X EXM1C/2A	EXM1C/4 EXM1C/4X EXM1C/4A	EXM1C/6 EXM1C/6X EXM1C/6A
Porte Ture Doors Portes Portas Gabetas	SX	1	1	2	2	1	3	3	2	1
	DX	1	...	1	...	...	1	...	...	...

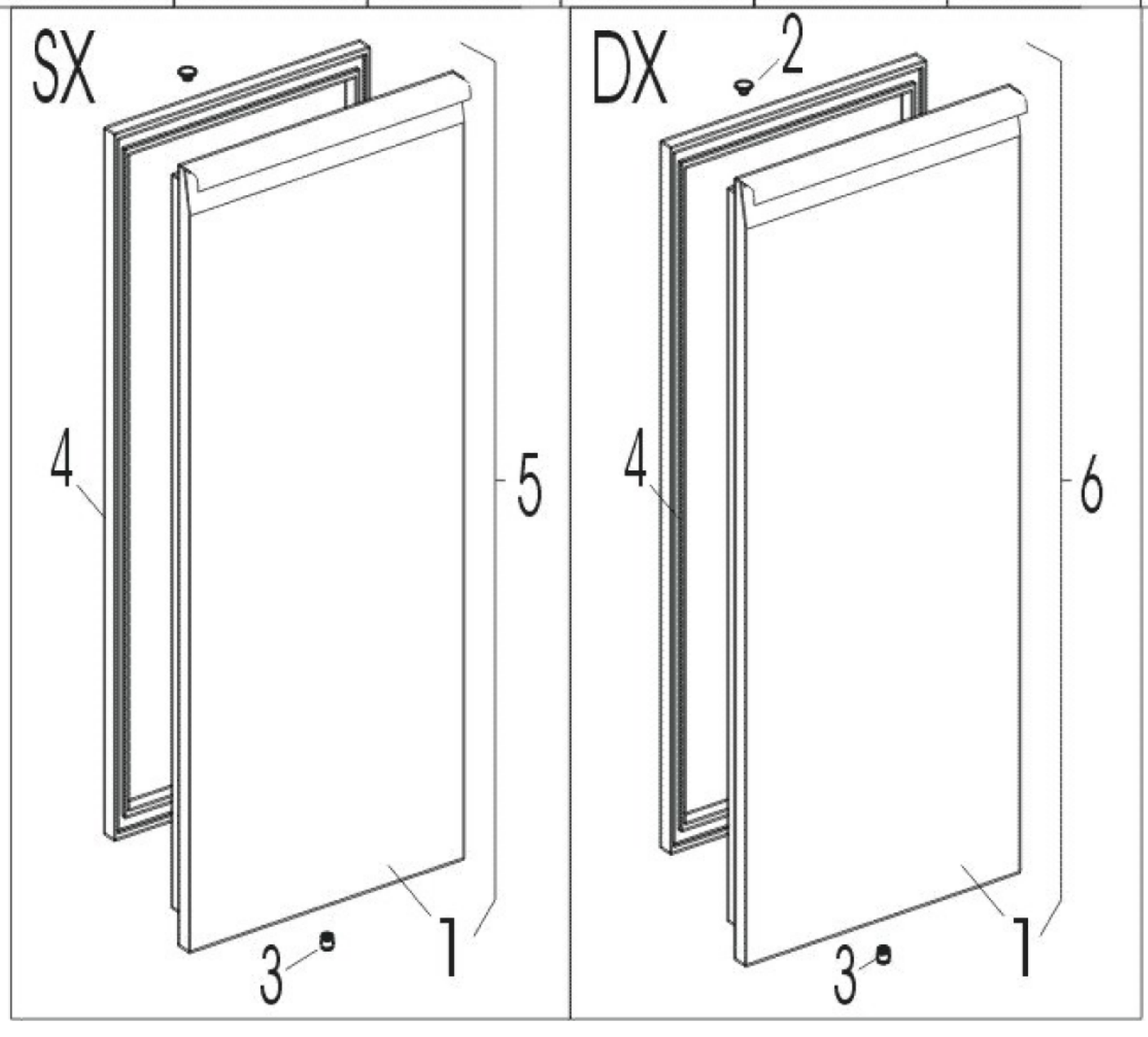

Modello Typ Model Modele Modelo

		EXM1A EXM1A/X EXM1A/A	EXM1A/2 EXM1A/2X EXM1A/2A	EXM1B EXM1B/X EXM1B/A	EXM1B/2 EXM1B/2X EXM1B/2A	EXM1B/4 EXM1B/4X EXM1B/4A	EXM1C EXM1C/X EXM1C/A	EXM1C/2 EXM1C/2X EXM1C/2A	EXM1C/4 EXM1C/4X EXM1C/4A	EXM1C/6 EXM1C/6X EXM1C/6A
Num. Cassetti Schublad Drawers Tiroirs Gabetas	1/2	-	2	-	2	4	-	2	4	6

