SIMAG

BIN AND ACCESSORIES
CONTENITORI E ACCESSORI
CABINES ET ACCESSOIRES
SPEICHER UND ZUBEHÖRE

090090.27 REV. 01-2011

PAGE PAGINA PAGE SEITE	TABLE OF CONTENTS	INDICE	TABLE DES MATIÉRES	INHALTVERZEICHNIS
1	ACCESSORIES	ACCESSORI	ACCESSOIRES	ZUBEHÖRE
2/3	R 80 - R 150 - STORAGE BINS	R 80 - R 150 - CONTENITORI	R 80 - R 150 - CABINES DE STOCKAGE	R 80 - R 150 - SPEICHER
4/5	R 250 - STORAGE BIN	R 250 - CONTENITORE	R 250 - CABINE DE STOCKAGE	R 250 - SPEICHER
6/7	RC 155 - ROLLER BIN	RC 155 - CONTENITORE MOBILE	RC 155 - CABINE A GLACE MOBILE	RC 155 - ROLLEISSPEICHER
8/9	R 85 - R 155 - STORAGE BINS	R 85 - R 155 - CONTENITORI	R 85 - R 155 - CABINES DE STOCKAGE	R 85 - R 155 - SPEICHER

ACCESSORIES - ACCESSORI - ACCESSOIRES - ZUBEHÖRE

PART NO CODICE REFERENCE STUECK NR	DESCRIPTION	DESCRIZIONE	DESIGNATION	BESCHREIBUNG
650071 00 650146 00 02000540 01	ICE SCOOP - SMALL ICE SCOOP - MEDIUM ICE SCOOP - LARGE	PALETTA - PICCOLA PALETTA - MEDIA PALETTA - GRANDE	PELLE - PETITE PELLE - MOYENNE PELLE - GRANDE	SCHAUFEL - KLEIN SCHAUFEL - MITTELGROSS SCHAUFEL - GROSSE
001140 04 001140 01 001140 02	WATER FILTER BODY COTTON CARTRIDGE CARBON CARTRIDGE	CONTENITORE FILTRO A CARTUCCIA CARTUCCIA DI COTONE CARTUCCIA A CARBONI	FILTRE À EAU CARTOUCHE DE COTON CARTOUCHE À CHARBON	FILTER BAUMWOLLE - EINSATZ KOHLE EINSATZ
001009 00 001009 01 001009 02	ICE MACHINE CLEANER - 1/2 LTR ICE MACHINE CLEANER - 1 LTR ICE MACHINE CLEANER - 5 LTR	DISINCROSTANTE - 1/2 L DISINCROSTANTE - 1 L DISINCROSTANTE - 5 L	DÉTARTRANT - 1/2 LTR DÉTARTRANT - 1 LTR DÉTARTRANT - 5 LTR	ENTKALKER - 1/2 LT ENTKALKER - 1 LT ENTKALKER - 5 LT
264000 02	ANTIALGAE CLEANER	LIQUIDO BATTERICIDA	LIQUIDE ANTIALGUES	ANTIALGEN FLÜSSIGKEIT
060294 01 263612 00	GEAR CASE GREASE - 1 KG FOOD GRADE LUBRICANT	GRASSO PER RIDUTTORI GRASSO PER CUSCINETTI	GRAISSE POUR REDUCTEURS GRAISSE POUR ROULEMENTS	FETT FUER GETRIEBE FETT FUER LAGER
001023 00	PRESSOSTAT ADJUST.KEY	CHIAVE REGOLAZ. PRESSOSTATO	CLEF DU REGL. PRESSOSTAT	SCHLÜSSEL FÜR PRESSOSTATEWSTELLUNG
060513 00	3/4 GAS WATER IN. TUBE	TUBO DI CARICO ACQUA 3/4 GAS	TUYAU ARRIVÉE EAU 3:4 GAS	WASSEREINLAUFROHR - 3/4 GAS
640076 13	RUBBER GASKET (3/4")	GUARNIZIONE (3/4")	JOINT (3/4")	DICHTUNG (3/4")
060513 01	WATER DRAIN TUBE	TUBO SCARICO ACQUA	TUYAU EVACUATION EAU	WASSERABFLUSSROHR

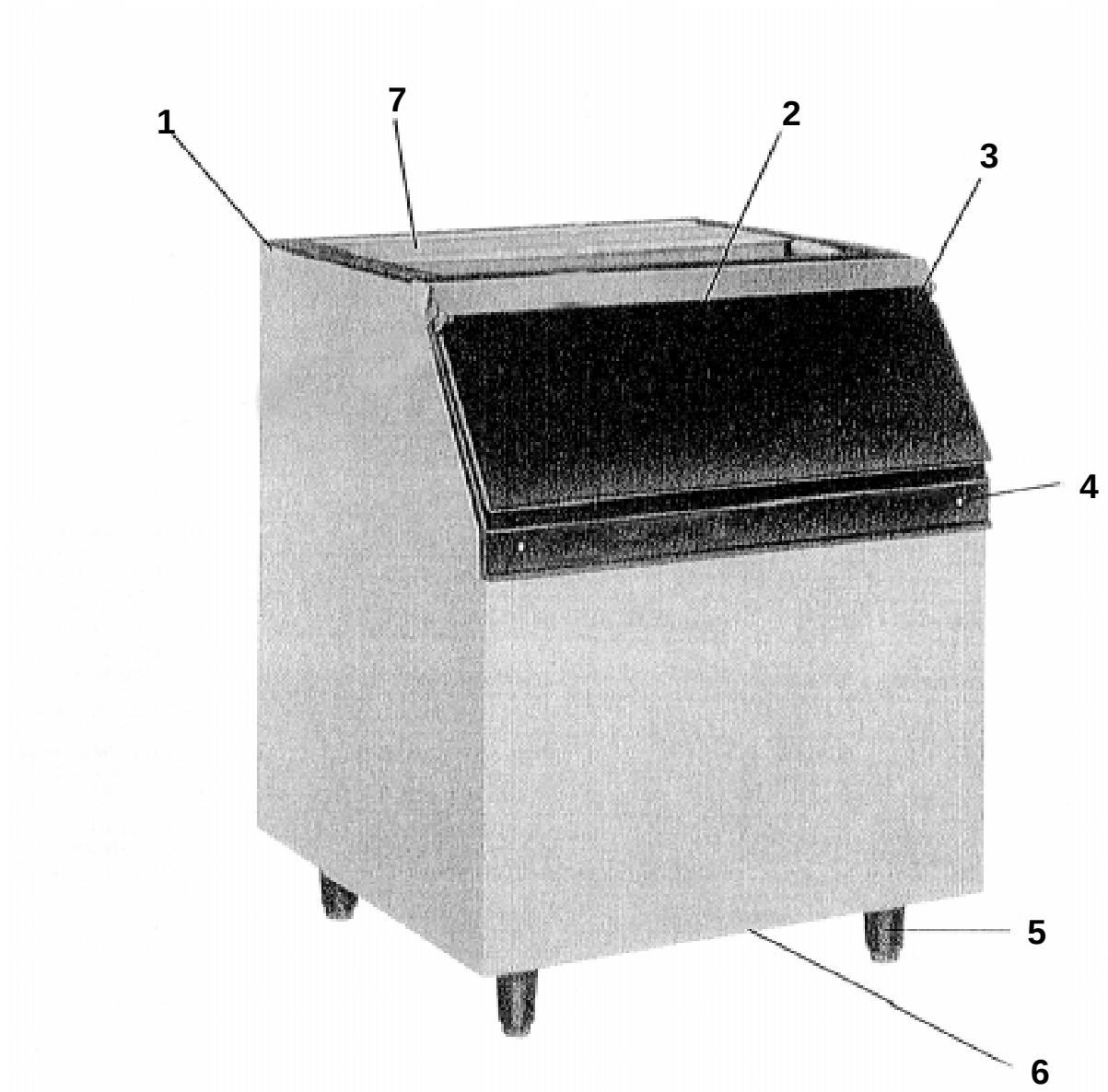
1
7
2
3
4
5
6

R 80 - R 150 - STORAGE BINS - CONTENITORI - CABINES DE STOCKAGE - SPEICHER

ITEM NO POS NO REP. NO REF. NO	PART NO - CODICE REFERENCE - STUECK NR **R 80**	**R 150**	DESCRIPTION	DESCRIZIONE	DESIGNATION	BESCHREIBUNG
1	CM 19550104		GASKET (PER METER)	GUARNIZIONE (PER METRO)	JOINT (PER METRE)	DICHTUNG (NACH METER)
2	CM 25130124 CM 25130130 CM 25560142	CM 25130124 CM 25130125 CM 25560135	HINGE SHORT HINGE LONG PIN	CERNIERA CORTA CERNIERA LUNGA PERNO	CHARNIÈRE COURT CHARNIÈRE LONGUE AXE	SCHARNIER SCHARNIER STIFT
3	CM 81460308	CM 81460309	BIN DOOR	SPORTELLO	PORTE CABINE	SPEICHERTUER
4	CM 81460266* CM 81460342#	CM 81460267	PLASTIC DOOR FRAME PLASTIC DOOR FRAME	CORNICE SPORTELLO CORNICE SPORTELLO	ENCADR. DE LA PORTE ENCADR. DE LA PORTE	TUERRAHMEN TUERRAHMEN
5	CM 25570880 CM 25460020		LEG LEG SOCKET	PIEDINO MANICOTTO PIEDINO	PIED MANCHON À VIS	FUESSE VERBINDUNGSMUFFE DER FÜSSE
6	CM 25161059* CM 25161141#	CM 25160509	DRIPS TRAY	RACCOGLIGOCCE	ÉGOUTTON	TROPEN SAMMLER
7	CM 25685311		DRAIN FITTING	FILTRO SCARICO	RACCORD EVACUATION	SCHLAUCH
			*UP TO 1999 #FROM 2000	*FINO AL 1999 #DAL 2000	*JUSQ'À 1999 #DU 2000	*BIS 1999 #VON 2000


SIMAG
R 250
1
2
3
4
5
6

R 250 - STORAGE BINS - CONTENITORI - CABINES DE STOCKAGE - SPEICHER

ITEM NO POS NO REP. NO REF. NO	PART NO - CODICE REFERENCE - STUECK NR **R 250**	DESCRIPTION	DESCRIZIONE	DESIGNATION	BESCHREIBUNG
1	CM 19550104	GASKET (PER METER)	GUARNIZIONE (PER METRO)	JOINT (PER METRE)	DICHTUNG (NACH METER)
2	CM 25130124 CM 25560141	HINGE HINGE SHAFT	CERNIERA ASTA CERNIERA	CHARNIÈRE AXE	SCHARNIER STIFT
3	CM 81460310	BIN DOOR	SPORTELLO	PORTE CABINE	SPEICHERTUER
4	CM 81460268	PLASTIC DOOR FRAME	CORNICE SPORTELLO	ENCADR. DE LA PORTE	TUERRAHMEN
5	CM 81502140 CM 81502140	LEG LEG SOCKET	PIEDINO MANICOTTO PIEDINO	PIED MANCHON À VIS	FUESSE VERBINDUNGSMUFFE DER FÜSSE
6	CM 25685311	DRAIN FITTING	FILTRO SCARICO	RACCORD EVACUATION	SCHLAUCH

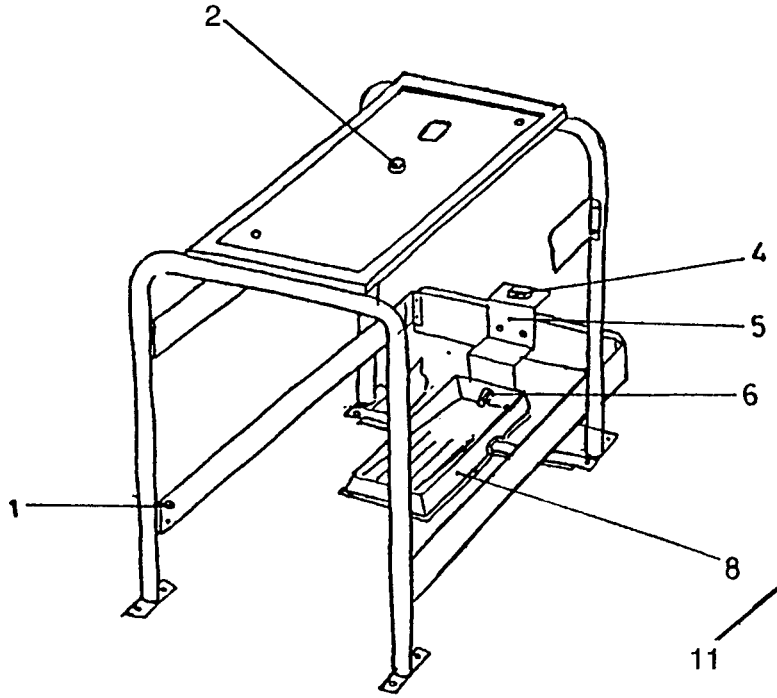

R 155 - ICE MAKER STAND

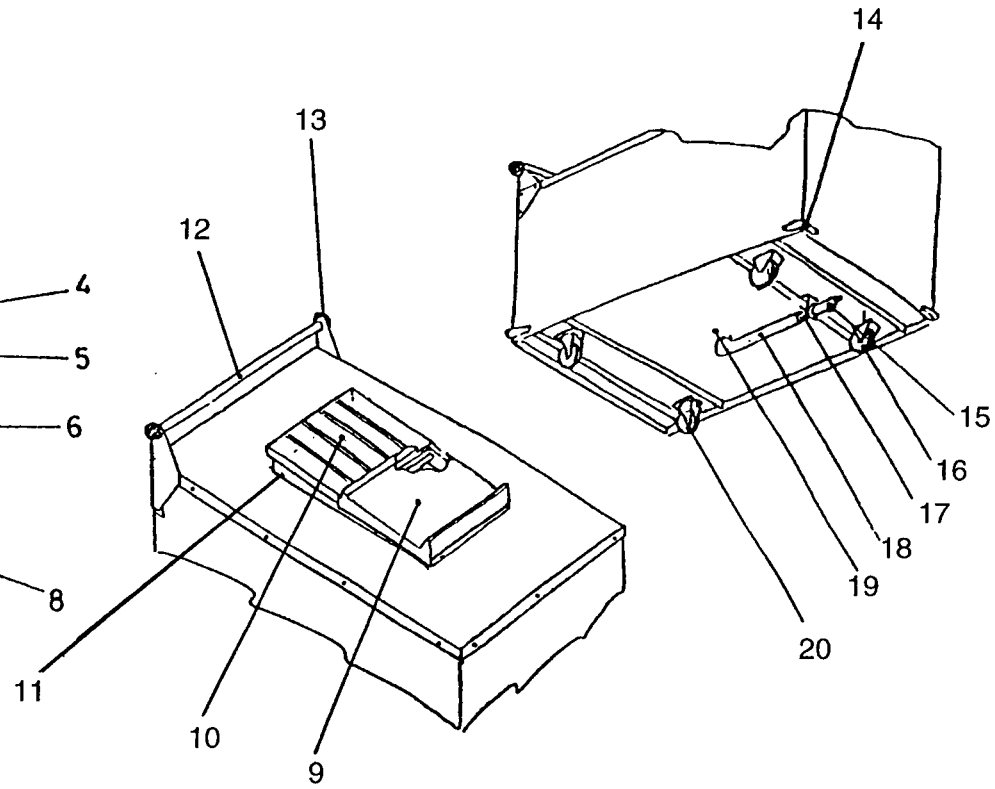

R 155 - ROLLING BIN

RC 155 - ROLLER BIN - CONTENITORE MOBILE - CABINE A GLACE MOBILE - ROLLEISSPEICHER

ITEM NO POS NO REP. NO REF. NO	PART NO CODICE REFERENCE STUECK NR	DESCRIPTION	DESCRIZIONE	DESIGNATION	BESCHREIBUNG
1	CM 25550356	BUFFER DUFFER	PROTEZIONE IN GOMMA	PROTECTION EN CAOUTCH.	GUMMISCHUETZUNG
2	650066 04	GROMMET	PASSAFILO	PASSAFIL	DURCHFÜHRUNGSTÜLLE
4	CM 33400026	WATER PROOF SWITCH	INTERRUTTORE STAGNO	INTERRUPTEUR À ETANCHE D'EAU	SCHALTER, WASSERDICHT
5	CM 25725491	METAL BRACKET	SUPPORTO	SUPPORT MÉTALLIQUE	METALLISCHER HALTER
6	CM 25631036 CM 25631037 640079 00	FEMALE PLAST. FITTING MALE PLAST FITTING O RING	RACCORDO FEMMINA RACCORDO MASCHIO GUARNIRIONE OR	RACCORD FEMELLE RACCORD MALE JOINT TORIQUE	AUFNEHITENDES ANSCHLUSS-STÜCK AUSSEN ANSCHLUSS-STÜCK O RING
8	CM 25820116	WATER DRIP TRAY	RACCOGLIGOCCE	ÉGOUTTOIR	TROPENSAMMLER
9	CM 25161111	TOP PLASTIC COVER	COPERCHIO IN PLASTICA SCORR.	COUVERCLE PLASTIQUE COULISS.	KUNSTOFFIGER SCHIEBEDECKEL
10	CM 25161112	BOTTON PLASTIC COVER	COPERCHIO IN PLASTICA FISSO	COUVERCLE PLASTIQUE FIXE	KUNSTOFFIGER, UNBEWEGLICHER DECKEL
11	CM 25165522	PLASTIC OPENING FRAME	CORNICE IN PLASTICA	ENCADREMENT EN PLASTIQUE	KUNSTOFFIGER RAHMEN
12	CM 25470007	HANDLE	MANIGLIA	POIGNÉE	HALTEGRIFF
13	CM 25550355	RUBBER BUFFER	PROTEZIONE IN GOMMA	PROTECTION EN CAOUTCH.	GUMMI SCHÜTZUNG
14	CM 25550357	CORNER GUARD	PROTEZIONE IN GOMMA	PROTECTION EN CAOUTCH.	GUMMI SCHÜTZUNG
15	CM 19651004	DRAIN TAP	RUBINETTO DI SCARICO	ROBINET D'EVACUAT.	WASSERABFLUSSVENTIL
16	CM 19651010	FIXED WHEEL	RUOTA FISSA	ROULETTE FIXE	UBEWEGLICHES RAD
17	CM 25600225	TUBE FITTING	RACCORDO	RACCORD	ANSCHLUSS-STÜCK
18	610148 10	DRAIN TUBE	TUBO DI SCARICO	TUYAU D'EVACUAT.	ABFLUSSROHR
19	660211 01 660219 01 640134 00	DRAIN FILTER DRAIN FITTING O RING	FILTRO SCARICO RACCORDO DI SCARICO GUARNIZIONE OR	FILTER D'EVACUATION EAU RACCORD D'EVACUAT. JOINT TORIQUE	SPEICHERABFLUSSFILTER SPEICHERABFLUSS O RING
20	CM 19651011	STEERING WHEEL	RUOTA GIREVOLE	ROULETTE PIVOTTANTE	DREHBARES RAD


6
2
1
3
7
4
8
5

R 85 - R 155 - STORAGE BINS - CONTENITORI - CABINES DE STOCKAGE - SPEICHER

ITEM NO POS. NO REP. NO REF. NO	PART NO CODICE REFERENCE STUECK NR **R 85**	**R 155**	DESCRIPTION	DESCRIZIONE	DESIGNATION	BESCHREIBUNG
1	CM 19550104		GASKET (PER METER)	GUARNIZIONE (PER METRO)	JOINT (PER METRE)	DICHTUNG (NACH METER)
2	CM 25130139	CM 25130138	HINGE	CERNIERA	CHARNIÈRE	GELENK
3	CM 81460374	CM 81460364	BIN DOOR	SPORTELLO	PORTE CABINE	SPEICHERTUER
	CM 19350201		BIN DOOR GASKET (PER FT)	GUARNIZIONE SPORTELLO (PER PIEDE)	JOINT PORTE CABINE (PAR PIED)	SPEICHERTUERDICHTUNG (F. FUSS)
4	CM 25740079	CM 25740076	LABEL	ETICHETTA	ETIQUETTE	ETIKETT
5	CM 81502140		LEG ASSY	PIEDINO ASSIEMATO	PIED ENS.	FUESSE
6	CM 81460375	CM 81460356	DEFLECTOR	DEFLETTORE	DEFLECTEUR	DEFLEKTOR
7	CM 81460379	CM 81460360	PLASTIC DOOR FRAME	CORNICE SPORTELLO	ENCADR. DE LA PORTE	TUERRAHMEN
8	CM 25685311		DRAIN FITTING	FILTRO SCARICO	RACCORD EVACUATION	SCHLAUCH