ARMARIO GASTRONORM DE REFRIGERACIÓN CONCEPT / GASTRONORM CABINET COOLING CONCEPT

- CAFP-801 19029729 / CAFP-802 19029730
- CAEP-801 19029773 / CAEP-802 19029774
- CAFN-801 19029744 / CAFN-802 19029746
- CAFP-802-2C 19029742 / CAFP-802-3C 19029743

FAGOR

Versión 2014-10

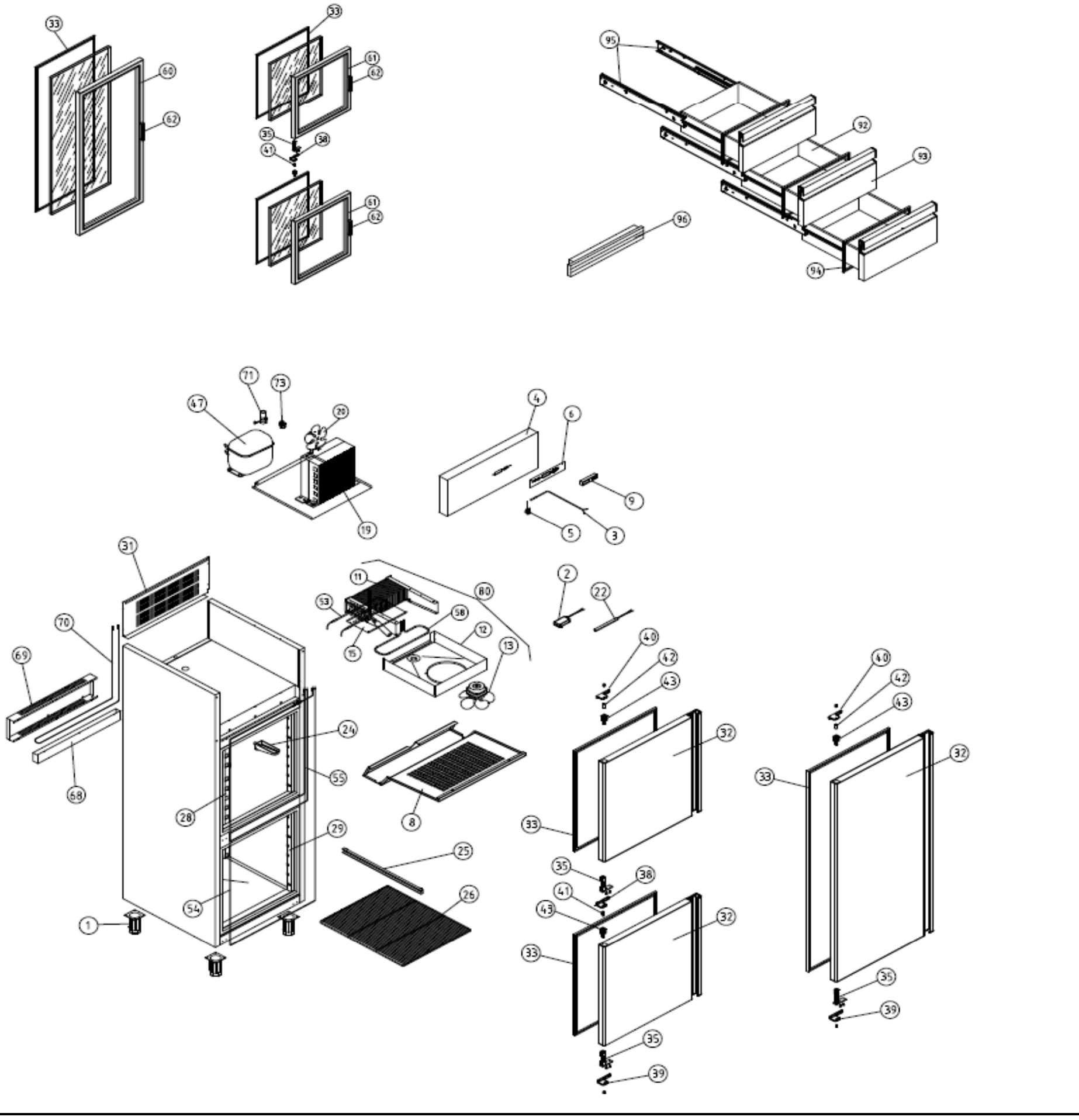

ARMARIO GASTRONORM DE REFRIGERACIÓN CONCEPT / GASTRONORM CABINET COOLING CONCEPT

CAF-802-C 19029758

CAF-802-P 19029765

CAFP-802/2 19029731

FAGOR

Versión 2014-10

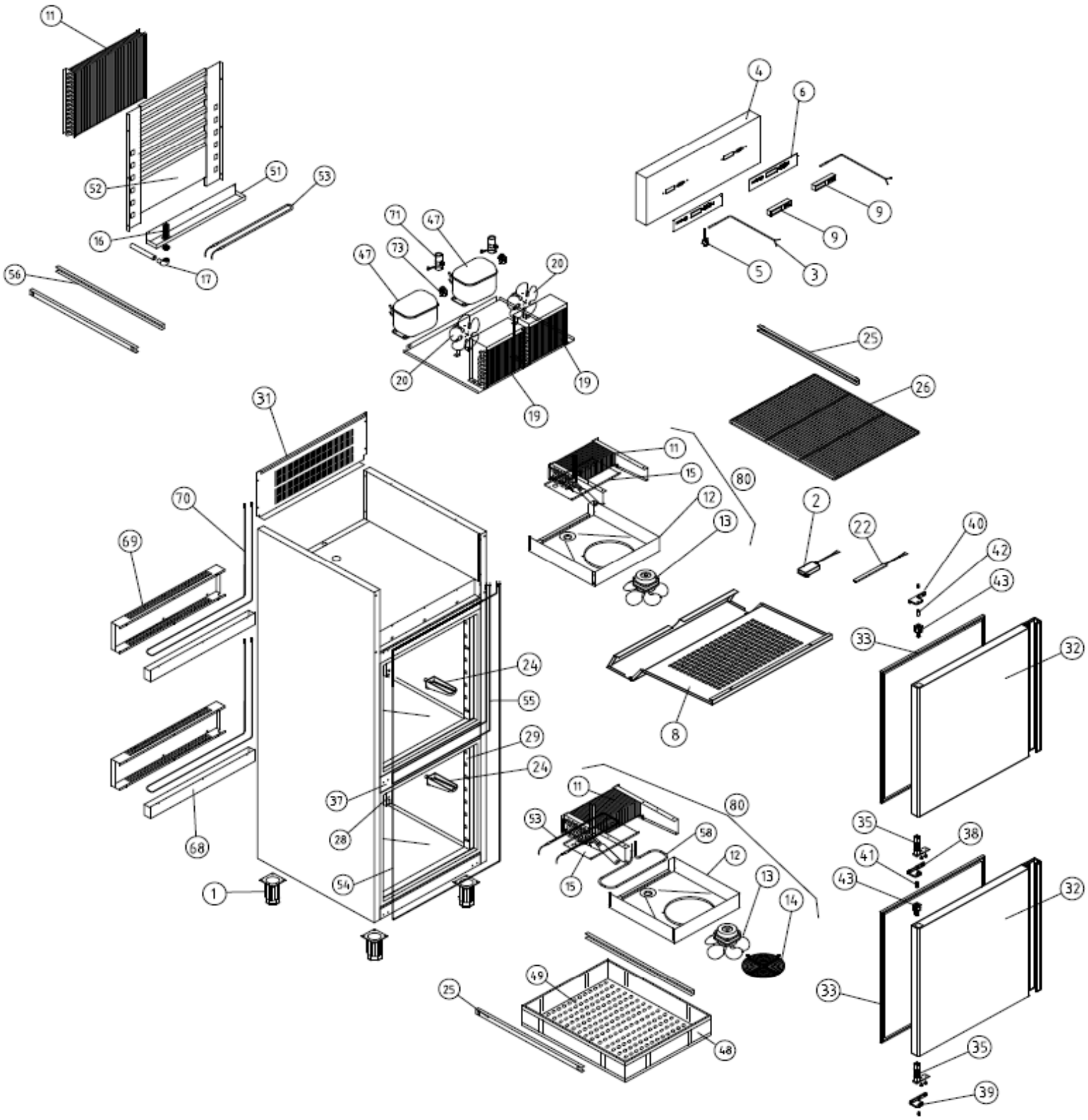

ARMARIO GASTRONORM DE REFRIGERACIÓN CONCEPT / GASTRONORM CABINET COOLING CONCEPT

CAFP-801 19029729 / CAFP-802 19029730

CAEP-801 19029773 / CAEP-802 19029774

CAFN-801 19029744 / CAFN-802 19029746

CAFP-802-2C 19029742 / CAFP-802-3C 19029743

FAGOR

Versión 2014-10

Nº	CODE CÓDIGO	RECOM.	DESCRIPCIÓN	DESCRIPTION	CAFP-801	CAFP-802	CAFN-801	CAFN-802	CAEP-801	CAEP-802	CAFP-802-2C	CAFP-802-3C
1	12033566		PATA REGULABLE ARM.GASTRO	GASTRO CABINET ADJUSTABLE LEG	4	4	4	4	4	4	4	4
2	12103609		FUENT APV-16-24 115-230 50/60Hz 24V 16W	APV-16-24 115-230 50/60Hz 24V 16W SOURCE	1	1			1	1	1	1
3	12045530		SONDA NTC 2,5 MTS	THERMOSTAT PROBE	1	1	1	1	1	1	1	1
4	12116239		CABEZA AFP-801 FAGOR CONCEPT	HEAD AFP-801 CONCEPT	1	1	1	1	1	1	1	1
5	12036888		MICROR.CONMUT.E3111CA	MICROR.CONMUT.E3111CA	1	1	1	1	1	1	1	1
6	12104752		ADHESIVO G. CONCEPT PWC	PWC CONCEPT RANGE STICKER	1	1	1	1	1	1	1	1
8	12116300		TAPA EVAPORADOR ARM. 800 CONCEPT	EVAPORATOR COVER ARM. 800 CONCEPT	1	1	1	1	1	1	1	1
9	12067649		TERMOSTATO POWER COMPAC TROPICAL	TROPICAL POWER COMPACT THERMOSTAT	1	1			1	1	1	1
9	12040693		TERMOSTATO POWER COMPAC CONG.	FREEZER POWER COMPACT THERMOSTAT			1	1				
11	12031794		BAT.6T4R300A4S PINTADO.ARMARIO	BAT.6T4R300A4S PINTADO.ARMARIO	1	1			1	1	1	1
11	12048802		BAT. 6T 4R 300A 6S 2 CIRCUITO	BAT. 6T 4R 300A 6S 2 CIRCUITO			1	1				
12	12070030		SUJ.VENT.AFP-700,800 COMPACTO	SUJ.VENT.AFP-700,800 COMPACTO	1	1	1	1	1	1	1	1
13	12034545		VENTIL.EVAPOR.5W S/ARO S/PATAS	VENTIL.EVAPOR.5W S/ARO S/PATAS	1	1	1	1	1	1	1	1
15	12044961		CUBRER.EVAP.FC61B ARM.COMPACTO	CUBRER.EVAP.FC61B ARM.COMPACTO	1	1	1		1	1	1	1
19	12050285		CONDENSADOR VENTILADO 100	CONDENSADOR VENTILADO 100			1	1				
19	12032903		CONDENSADOR 9X2	CONDENSADOR 9X2	1	1			1	1	1	1
20	12032903		VENTILADOR 10W PATA PALA 220V	VENTILADOR 10W PATA PALA 220V	1	1			1	1	1	1
22	12117149		TIRA LED T3-270-3014-868.16-CW24V DC 2mt	T3-270-3014-868.16-CW24V DC 2mt LED STRIP	1	1			1	1	1	1
24	12037375		CANALIZADOR AGUA 150 GRIS REFRIGERACION	REFRIGERATION GREY 150 WATER DRAINAGE	1	1			1	1	1	
24	12037314		CANALIZADOR AGUA 150 NEGRO MANT.CONGEL.	FREEZER BLACK 150 WATER DRAINAGE			1	1				
25	12037948		GUIA GN L=662 mm	GUIDE GN L=662 mm	6	6	6	6	6	6	2	2
26	12037958		PARRILLA GN 2/1 650X530	GRILL GN 2/1 650x530	3	3	3	3	3	3	1	1
28	12034805		CREMALL.INT.AFP-GN	CREMALL.INT.AFP-GN	2	2	2	2	2	2		
28	12036498		CREMALL.INT.DPTO.AF-702-C	CREMALL.INT.DPTO.AF-702-C							2	2
28	12069495		CREMALL.DELANT.AFP-CAJONES	CREMALL.DELANT.AFP-CAJONES							2	2
90	12069496		CREM.INT.IZDA.AFP-CAJONES	CREM.INT.IZDA.AFP-CAJONES							1	1
90	12069497		CREM.INTER.DCH.AFP-CAJONES	CREM.INTER.DCH.AFP-CAJONES							1	1
29	12034237		CREMALL.DELANT.AFP-GN	CREMALL.DELANT.AFP-GN	2		2		2			
29	12035486		CREM.DEL.PEQ.AFP-GN DCHA.	CREM.DEL.PEQ.AFP-GN DCHA.		4		4		4	2	2
31	12036589		REJILLA MOTOR 800	GRID ENGINE 800	1	1	1	1	1	1	1	1
32	12083604		PUE PEQ AFP CONCEPT IZD	PUE PEQ AFP CONCEPT IZD		2		2			1	1
32	12083602		PUE CARN AFP/AFN CONCEPT IZD	PUE CARN AFP/AFN CONCEPT IZD	1		1					
33	12038148		BURLETE PUERTA CARNICERA ARMARIO	GASKET DOOR CABINET BUTCHER	1		1		1			
33	12038144		BURLETE PUERTA PEQ. ARMARIO	SMALL DOOR GASKET. WARDROBE		2		2		2	1	1
35	12038130		BIS.TRS1D DOBL MUELLE DV-2608	DOUBLE SPRING HINGE TRS1D DV-2608	1	2	1	2	1	2	1	1
37	12083394		FRONTI HORZ.POST.AFP MAGNETICO	MAGNETIC HORZ.POST.AFP FRONTI		1		1		1	1	1
38	12036776		SOP.BISAG INF IZQ. FRES	INF SOP.BISAG LEFT. FRES		1		1		1		
39	12036986		SOP.BISAG.INF.IZD.	LEFT LOW HINGE SUPPORT	1	1	1	1	1	1	1	1
40	12041474		SOPORTE BISAGRA SUPERIOR IZQUIERDO	LEFT TOP HINGE SUPPORT	1	1	1	1	1	1	1	1
41	12037138		EJE ROSCA EXT.30X10INOX	THREADED SHAFT EXT.30X10INOX		1		1		1		
42	12038076		EJE SUP. PUERTAS 30x10 VARILLA INOX.INT. M-6	SUP HUB. 30x10 ROD DOORS INOX.INT. M-6	1	1	1	1	1	1	1	1
43	12037723		CAJA ALOJAMIENTO MUELLE GRIS	GREY SPRING HOUSING BOX	1	2	1	2	1	2	1	1
47	12028976		COMPRES.FR-8.5-G R134A	COMPRES.FR-8.5-G R134A	1	1			1	1	1	1
47	12027322		COMPR.SC-15-CL R404A	COMPR.SC-15-CL R404A			1	1				
53	12034637		RESIST.BLIND.FC61-71 350W	RESIST.R17 350W CABLE1MT.			1	1				
54	12036014		RESIST.MARCO EXT.700/800 43W	RESIST.MARCO EXT.700/800 43W			1	1				
55	12036316		RESIST.FRONTI H.1400-1600 12W	RESIST.FRONTI H.1400-1600 12W				1				
58	12036313		RESIST.BANDEJA 700-20W	RESIST.BANDEJA 700-20W			1	1				
60	12045918		PT. CRISTAL ARM. CARNICERA	GLASS DOOR ARM. BUTCHER					1			
61	12068257		PT. CRISTAL ARM. PEQUEÑA	GLASS DOOR ARM. SMALL						2		
62	12068289		TIRAD. PT. CRISTAL	GLASS DOOR HANDLE					1	2		
68	12034715		BAND.EVAP.AUT.AFP-GN	BAND.EVAP.AUT.AFP-GN	1	1	1	1	1	1	1	1
69	12036513		TAPA BANDEJA EVAP. AUTOM. AFP.800	TRAY COVER EVAP. AUTO. AFP.800	1	1	1	1	1	1	1	1
70	12038150		RESIST.EVAP.AUT.80W 3MT	RESIST.EVAP.AUT.80W 3MT	1	1	1	1	1	1	1	1
71	12018649		CONDEN.ARRANQUE SC-117U5017 80 mF	CONDEN.ARRANQUE SC-117U5017 80 mF			1	1				
71	12033454		CONDEN.ARRANQUE FR-117U5015 80 mF	CONDEN.ARRANQUE FR-117U5015 80 mF	1	1			1	1	1	1
73	12034947		RELE ARRANQUE COMPRESOR FR-8,5G 2	RELE ARRANQUE COMPRESOR FR-8,5G 2	1	1			1	1	1	1
73	12034983		RELE ARRANQ COMPR.SC-15CL 6019	RELE ARRANQ COMPR.SC-15CL 6019			1	1				
80	12116301		UD.EV. AFP-700,800,APP	UD.EV. AFP-700,800,APP	1	1			1	1	1	1
80	12110143		UND. EV. AFN-700,800	UND. EV. AFN-700,800			1	1				
92	12029571		CAJON GN2/1 PROF.200 AFP802-2C	DRAWER GN2 / 1 PROF.200 AFP802-2C							2	
92	12030860		CAJON GN2/1AFP PROF.100	DRAWER GN2 / 1AFP PROF.100								3
93	12083654		CJ.CAJ.PRF200 AFP-800 CONCEPT	DRAWER SET PRF200 AFP-800 CONCEPT							2	
93	12083649		FRENT.CAJ.PROF.100 AFP802-3C	DRAWER FRONT PROF.100 AFP802-3C								3
94	12035555		BURLETE 635X315 CJ.AFP800	GASKET 635x315							2	
94	12035827		BURLETE 635X190 CJ.AFP800	GASKET 635x190								3
95	12068304		GUIA ACERO LONGT.550 (JUEGO)	STEEL GUIDE LONGT.550							2	3
96	12083395		FRONTI HOR.POST.CAJ.AFP MAGNET	FRONTI HOR.POST.CAJ.AFP MAGNET							1	2

ARMARIO GASTRONORM DE REFRIGERACIÓN CONCEPT / GASTRONORM CABINET COOLING CONCEPT

CAF-802-C 19029758

CAF-802-P 19029765

CAFP-802/2 19029731

FAGOR

Versión 2014-10

Nº	CODE CÓDIGO	RECOM.	DESCRIPCIÓN	DESCRIPTION	CAF-802-C	CAF-802-P	CAFP-802/2
1	12033566		PATA REGULABLE ARM.GASTRO	GASTRO CABINET ADJUSTABLE LEG	4	4	4
2	12103609		FUENT APV-16-24 115-230 50/60Hz 24V 16W	APV-16-24 115-230 50/60Hz 24V 16W SOURCE	1	1	1
3	12045530		SONDA NTC 2,5 MTS	THERMOSTAT PROBE	2	2	2
4	12116255		CABEZA AF-800 C/P FAGOR CONCEPT	HEAD AF-800 C/P CONCEPT	1	1	1
5	12036888		MICROR.CONMUT.E3111CA	MICROR.CONMUT.E3111CA	1	1	1
6	12104752		ADHESIVO G. CONCEPT PWC	PWC CONCEPT RANGE STICKER	2	2	2
8	12116300		TAPA EVAPORADOR ARM. 800 CONCEPT	EVAPORATOR COVER ARM. 800 CONCEPT	1	1	1
9	12067649		TERMOSTATO POWER COMPAC TROPICAL	TROPICAL POWER COMPACT THERMOSTAT	1	1	2
9	12040693		TERMOSTATO POWER COMPAC CONG.	FREEZER POWER COMPACT THERMOSTAT	1	1	
11	12030935		EV.B14T2R426A6S DPTO.PESC PIN.	EV.B14T2R426A6S DPTO.PESC PIN.	1		
11	12041887		BATERIA 4T 4R 300A 4S (PINTADO	BATERIA 4T 4R 300A 4S (PINTADO	1	1	2
11	12046898		BAT.6T4R 300A 6S.PINT.ARMARIOS	BAT.6T4R 300A 6S.PINT		1	
12	12070030		SUJ.VENT.AFP-700,800 COMPACTO	SUJ.VENT.AFP-700,800 COMPACTO	1	2	2
13	12034545		VENTIL.EVAPOR.5W S/ARO S/PATAS	VENTIL.EVAPOR.5W S/ARO S/PATAS	1	2	2
14	12034663		REJILLA VENT.D.246 PINTADA	REJILLA VENT.D.246 PINTADA		1	1
15	12044961		CUBRER.EVAP.FC61B ARM.COMPACTO	CUBRER.EVAP.FC61B ARM.COMPACTO	1	2	2
16	12037617		DESAGÜE 1/2 PULG. CUELLO CORTO	1/2 INCH DRAIN. SHORT NECK	1		
17	12037541		CODO PVC MIXTO 90º 20x1/2	PVC ELBOW JOINT 90 20x1 / 2	1		
19	12033007		CONDENSADOR 8X2 REF.C CT82DG	CONDENSADOR 8X2 REF.C CT82DG	2	1	2
19	12031472		CONDENSADOR 10X4 NEUTRO	CONDENSADOR 10X4 NEUTRO		1	
20	12032903		VENTILADOR 10W PATA PALA 220V	VENTILADOR 10W PATA PALA 220V	2	1	
20	12059041		VENT 5W H72 200 28º 0.5m VS	VENT 5W H72 200 28º 0.5m VS		1	2
22	12117149		TIRA LED T3-270-3014-868.16-CW24V DC 2mt	T3-270-3014-868.16-CW24V DC 2mt LED STRIP	1	1	1
24	12037375		CANALIZADOR AGUA 150 GRIS REFRIGERACION	REFRIGERATION GREY 150 WATER DRAINAGE	1	1	2
24	12037314		CANALIZADOR AGUA 150 NEGRO MANT.CONGEL.	FREEZER BLACK 150 WATER DRAINAGE		1	
25	12037948		GUIA GN L=662 mm	GUIDE GN L=662 mm	2	8	4
26	12037958		PARRILLA GN 2/1 650X530	GRILL GN 2/1 650x530	1	1	2
28	12036498		CREMALL.INT.DPTO.AF-702-C	CREMALL.INT.DPTO.AF-702-C	2	4	4
29	12035486		CREM.DEL.PEQ.AFP-GN DCHA.	CREM.DEL.PEQ.AFP-GN DCHA.	4	4	4
31	12036589		REJILLA MOTOR 800	GRID ENGINE 800	1	1	1
32	12083604		PUE PEQ AFP CONCEPT IZD	PUE PEQ AFP CONCEPT IZD	2	2	2
33	12038144		BURLETE PUERTA PEQ. ARMARIO	SMALL DOOR GASKET. WARDROBE	2	2	2
35	12038130		BIS.TRS1D DOBL MUELLE DV-2608	DOUBLE SPRING HINGE TRS1D DV-2608	2	2	2
37	12083396		FRONTI HOR.POST.AF-700,800-C/P	FRONTI HOR.POST.AF-700.800-C / P	1	1	1
38	12036776		SOP.BISAG INF IZQ. FRES	INF SOP.BISAG LEFT. FRES	1	1	1
39	12036986		SOP.BISAG.INF.IZD.	LEFT LOW HINGE SUPPORT	1	1	1
40	12041474		SOPORTE BISAGRA SUPERIOR IZQUIERDO	LEFT TOP HINGE SUPPORT	1	1	1
41	12037138		EJE ROSCA EXT.30X10INOX	THREADED SHAFT EXT.30X10INOX	1	1	1
42	12038076		EJE SUP. PUERTAS 30x10 VARILLA INOX.INT. M-6	SUP HUB. 30x10 ROD DOORS INOX.INT. M-6	1	1	1
43	12037723		CAJA ALOJAMIENTO MUELLE GRIS	GREY SPRING HOUSING BOX	2	2	2
47	12059107		COMPR. TL-5-G R134A	COMPR. TL-5-G R134A	2	1	2
47	12027053		COMPR. SC-12-CLX.2 220V 50/60HZ 104L2697	COMPR. SC-12-CLX.2 220V 50/60HZ 104L2697		1	
48	12033784		CUBETA DPTO CONGEL.530X540	TRAY DEPT CONGEL.530X540	3	3	
49	12034707		FOND. PERF.AGUILAR 530x540x100	FOND. PERF.AGUILAR 530x540x100	3		
51	12035779		BANDEJA GOTEO DPTO.PESCADO	DRIP TRAY DPTO. FISH	1		
52	12069485		DUELAS EVAP.DPTO.PESCADO	SLAT EVAP.DPTO.FISH	1		
53	12033255		RESIST.DESES.DEP.PESC.220V425W	RESIST.DESES.DEP.PESC.220V425W	1		
53	12034637		RESIST.BLIND.FC61-71 350W	RESIST.R17 350W CABLE1MT.		1	
54	12036014		RESIST.MARCO EXT.700/800 43W	RESIST.MARCO EXT.700/800 43W		1	
55	12036316		RESIST.FRONTI H.1400-1600 12W	RESIST.FRONTI H.1400-1600 12W		1	
56	12036716		GUIA BAJ GN CENT L=613MM Y PES	GUIDE GN L=613 mm	6		
58	12035911		RESIST. BANDEJA DEPART, 18W	RESIST. BANDEJA DEPART, 18W		1	
68	12034715		BAND.EVAP.AUT.AFP-GN	BAND.EVAP.AUT.AFP-GN	1	2	2
69	12036513		TAPA BANDEJA EVAP. AUTOM. AFP.800	TRAY COVER EVAP. AUTO. AFP.800	1	2	2
70	12038150		RESIST.EVAP.AUT.80W 3MT	RESIST.EVAP.AUT.80W 3MT	1	1	1
70	12041467		RESIST.EVAP.AUT.80W 4MT	RESIST.EVAP.AUT.80W 4MT		1	1
71	12018649		CONDEN.ARRANQUE SC-117U5017 80 mF	CONDEN.ARRANQUE SC-117U5017 80 mF		1	
71	12033999		CONDEN.ARRANQUE TL-G 17U5014 60 mF	CONDEN.ARRANQUE TL-G 17U5014 60 mF	2	1	2
73	12035096		RELE ARRANQUE COMPRESOR SC-12CL	RELE ARRANQUE COMPRESOR SC-12CL		1	
73	12034981		RELE ARRANQUE COMPRESOR TL-5G 6000	RELE ARRANQUE COMPRESOR TL-5G 6000	2	1	2
80	12115884		UD.EV.AFP-700/800-C/P FRIO	UD.EV.AFP-700/800-C/P FRIO	1	1	1
80	12083678		UD.EVAP.AF-802-C,1602C COMPACT	UD.EVAP.AF-802-C,1602C COMPACT		1	
80	12083674		UD.EVAP.AFP-802/2 INF. COMPACT	UD.EVAP.AFP-802/2 INF. COMPACT			1