SIMAG

SMN 35
SMN 45

R 134 A VERSION

SPARE PARTS LIST
CATALOGO RICAMBI
CATALOGUE PIÈCES DÉTACHÉES
ERSATZTEILENKATALOG

090090.07 REV. 03/2015

PAGE PAGINA PAGE SEITE	TABLE OF CONTENTS	INDICE	TABLE DES MATIERES	INHALTVERZEICHNIS
1	TABLE OF CONTENTS	INDICE	TABLE DES MATIERES	INHALTVERZEICHNIS
2/3	UNIT PANELS	ASSIEME MOBILE	ENS. CAROSSERIE	MACHINE GEHAUSE
4/5	REFRIGERANT SYSTEM AIR COOLED	SISTEMA REFRIGERANTE RAFFR. AD ARIA	CIRCUIT FRIGORIFIQUE REFROID. A AIR	GEFRIERSYSTEM LUFTGEKUEHLT
6/7	REFRIGERANT SYSTEM WATER COOLED	SISTEMA REFRIGERANTE RAFFR. AD ACQUA	CIRCUIT FRIGORIFIQUE REFROID. A EAU	GEFRIERSYSTEM WASSERGEKUEHLT
8/9	WATER SYSTEM	CIRCUITO IDRAULICO	CIRCUIT HYDRAULIQUE	WASSER SYSTEM
10/11	CONTROL BOX	SCATOLA DI CONTROLLO	BOITE ELECTRIQUE	SCHALTSCHRANK
12	COMPRESSOR AND ELECTRIC COMPONENT CHARTS	TABELLA COMPRESSORI E COMPONENTI ELETTRICI	LISTE DES COMPRESSEURS ET COMPOSANTS ELECTRIQUE	KOMPRESSOR UND ELEKTRISCHER TEILLISTE

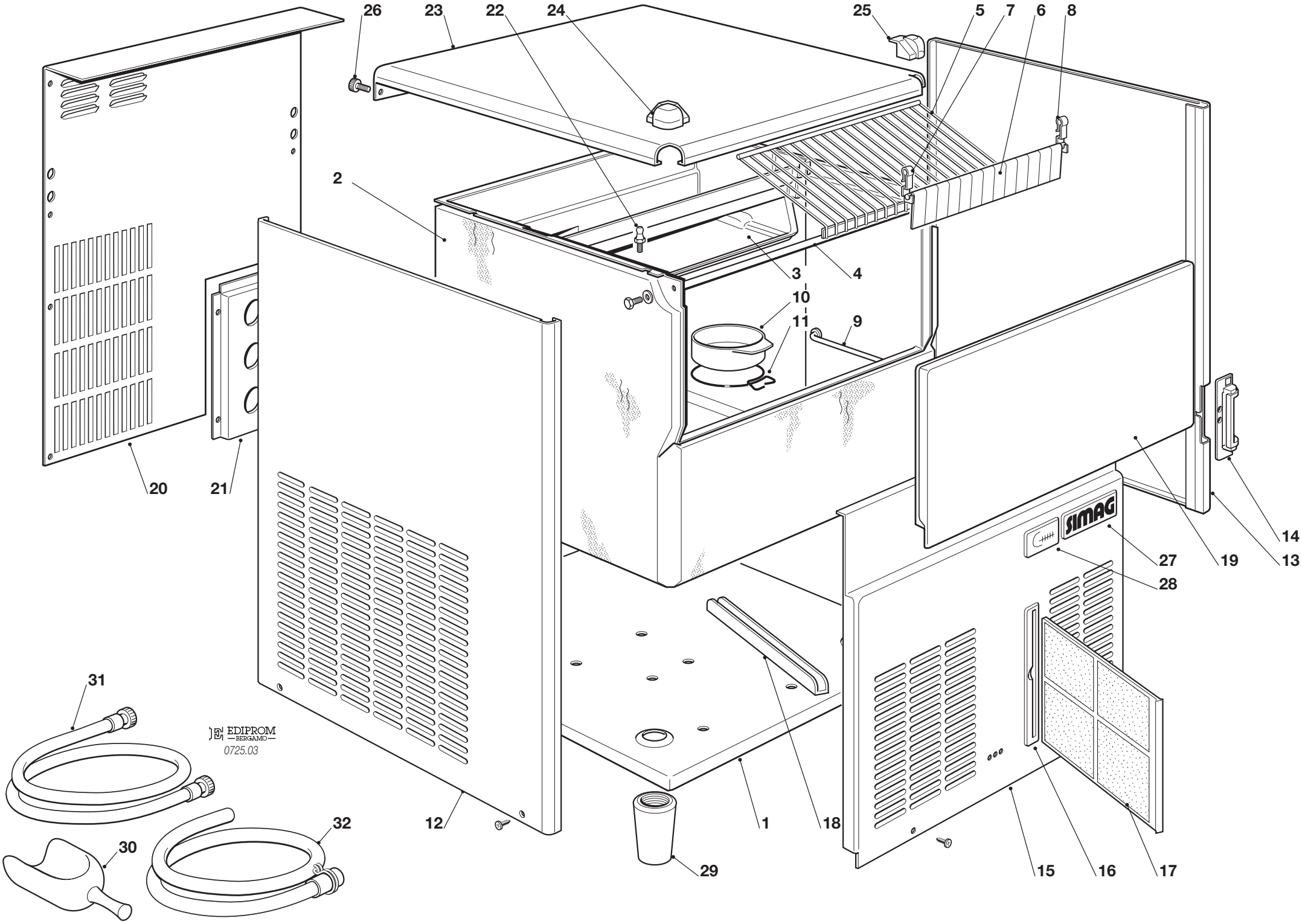
26
23
22
24
25
5
7
6
8
2
3
4
10
11
9
20
21
14
13
19
27
28
SIMAG
31
32
30
12
1
18
29
15
16
17
EDIPROM
BERGAMO
0725.03

SMN 35- SMN 45 -UNIT PANELS - ASSIEME MOBILE - ENS. CARROSSERIE - MACHINE GEHAUSE-

ITEM NO POS NO REP. NO REF. NO	PART NO - CODICE REFERENCE - STUECK NR.	DESCRIPTION	DESCRIZIONE	DESIGNATION	BESCHREIBUNG
1	702510 00	BASE	PIASTRINA DI BASE	PLAQUE DE BASE	GRUNDPLATTE
2	782094 05R 782094 06R	INSULATED BIN ASSY SMN 35 INSULATED BIN ASSY SMN 45	ASSIEME CELLA ISOLATA SMN 35 ASSIEME CELLA ISOLATA SMN 45	ENS. CABINE SMN 35 ENS. CABINE SMN 45	ISOLIEREISSPEICHER SMN 35 ISOLIEREISSPEICHER SMN 45
3	660635 04	EVAPORAT. HOUSING	INVOLUCRO EVAPORAT.	CHAMBRE INTERIEUR	CELLE INTERN
4	732016 08	BIN DOOR BRACKET	ASTA PORTELLO	TIGE PORTE	KLAPPENACHSE
5	650714 01	ICE DEFLECTOR	GRIGLIA SCORRIMENTO CUBETTI	GRILLE GLISSEMENT GLAÇON	ABGLEITGRILL
6	783172 00R	CURTAIN ASSY	ASSIEME TENDINA	ENS. LAMELLE	ABDECKKLAPPE GESAMTHEIT
7	660388 00	LEFT CURTAIN SUPPORT	SUPP. TENDINA SINISTRO	SUPP. LAMELLE GAUCHE	LINKE ABDECKLAPPE HALTERUNG
8	660388 01	RIGHT CURTAIN SUPPORT	SUPP. TENDINA DESTRO	SUPP. LAMELLE DROITE	RECHTE ABDECKLAPPE HALTER.
9	732017 02	BULB HOLDER	TUBO PORTABULBO	TUBE PORTEBULBE	FUEHLERHALTER
10	660741 00	PLASTIC PLUG	TAPPO INVOLUCRO EVAPORAT.	BOUCHON EN PLASTIQUE	PLASTIKSTOPFEN
11	460047 01	SPRING	MOLLA	RESSORT	FEDER
12	722307 00 722311 00	LEFT PANEL SMN 35 LEFT PANEL SMN 45	PAN.LO LAT. SX SMN 35 PAN.LO LAT. SX SMN 45	JOUE GAUCHE SMN 35 JOUE GAUCHE SMN 45	LINKE ABDECKL. HALTER. SMN 35 LINKE ABDECKL. HALTER. SMN 45
13	722306 00 722310 00	RIGHT PANEL SMN 35 RIGHT PANEL SMN 45	PAN.LO LAT. DX SMN 35 PAN.LO LAT. DX SMN 45	JOUE DROITE SMN 35 JOUE DROITE SMN 45	RECHTEGEHÄUS. EDELST. SMN 35 RECHTEGEHÄUS. EDELST. SMN 45
14	660883 00	FRONT SWITCH PLASTIC PROT	CARTER PROTEZIONE INTERRUT	CARTER PROTECTION INTERRUPT	SCHALTERABDECKUNG
15	722309 00 722309 01 722312 00 722312 01	FRONT PANEL AIR SMN 35 FRONT PANEL WATER SMN 35 FRONT PANEL AIR SMN 45 FRONT PANEL WATER SMN 45	PAN.LO ANT. ARI A SMN 35 PAN.LO ANT. ACQUA SMN 35 PAN.LO ANT. ARI A SMN 45 PAN.LO ANT. ACQUA SMN 35	PAN.AU AVANT . AIR SM 35 PAN.AU AVANT . EAU SMN 35 PAN.AU AVANT . AIR SMN 45 PAN.AU AVANT . EAU SMN 45	VOR.WAND ED.T. LUFT SMN 35 VOR.WAND ED.T. WASS. SMN 35 VOR.WAND ED.T. LUFT SMN 45 VOR.WAND ED.T. WASS. SMN 45
16	660889 00 660889 01	AIR FILTER SEAT SMN 35 AIR FILTER SEAT SMN 45	SEDE FILTRO ARIA SMN 35 SEDE FILTRO ARIA SMN 45	SIEGE FILTRE A AIR SMN 35 SIEGE FILTRE A AIR SMN 45	LUFTFILTERHALTER SMN 35 LUFTFILTERHALTER SMN 45
17	660888 00 660888 01	AIR FILTER SMN 35 AIR FILTER SMN 45	FILTRO ARIA SMN 35 FILTRO ARIA SMN 45	FILTRE A AIR SMN 35 FILTRE A AIR SMN 45	LUFT FILTIER SMN 35 LUFT FILTIER SMN 45
18	660887 00	SLIDE, AIR FILTER	GUIDA FILTRO ARIA	GLISSIERE FILTRE A AIR	FUHRUNF FUR LUFTFILTIER
19	782092 06R	BIN DOOR	SPORTELLO	PORTE CABINE	SPEICHERTUER
20	702324 00 702325 00	REAR PANEL SMN 35 REAR PANEL SMN 45	PANNELLO POSTERIORE SMN 35 PANNELLO POSTERIORE SMN 45	PANNEAU POSTERIEUR SMN 35 PANNEAU POSTERIEUR SMN 45	HINTERE ABDECKUNG SMN 35 HINTERE ABDECKUNG SMN 45
21	702301 00	METAL BRACKET FOR FITTING	SUPPORTO ATTACCHI	SUPPORT DE RACCORDS	METALLTRÄGER
22	650790 00	STUD	PERNO	AXE	STIFT
23	722308 00	TOP PANEL	PANNELLO SUPER. INOX	ENS. COUVERCLE	DECKEL GESAMTHEIT
24	660884 03	LEFT TOP CAP	TAPPO IN PLASTICA SINISTRO	CAPUCHON EN PLAST. GAUCHE	PLASTIK PROFEN LINK
25	660884 02	RIGHT TOP CAP	TAPPO IN PLASTICA DESTRO	CAPUCHON EN PLAST. DROITE	PLASTIK PROFEN RECHT
26	650806 00	REAR STUD	PERNO POSTERIORE	AXE ARRIÉRE	TRÄGEN - HINTEN
27	650976 00	SIMAG LOGO	TARGHETTA SIMAG	EMBLEME SIMAG	SIMAG ABGEBILDET
28	650976 24 650976 25	SMN 35 LABEL SMN 45 LABEL	TARGHETTA SMN 35 TARGHETTA SMN 45	EMBLEME SMN 35 EMBLEME SMN 45	SMN 35 ABGEBILDET SMN 45 ABGEBILDET
29	660638 02	LEG	PIEDE REGOLABILE	PIED RÉGLABE	GERÄTEFUSS
30	650071 00	ICE SCOOP	SESSOLA	SASSE	EISSCHAUFEL
31	060513 00	KIT WATER SUPPLY PIPE	KIT TUBO ALIM. ACQUA	KIT TUYAU D'ALIM. EAU	WASSER ANSCHLUSSCHLAUCH
32	060513 01	KIT WATER DRAIN PIPE	KIT TUBO SCARICO ACQUA	KIT TUYAU VIDANGE EAU	WASSER SLAUFSCHLAUCH

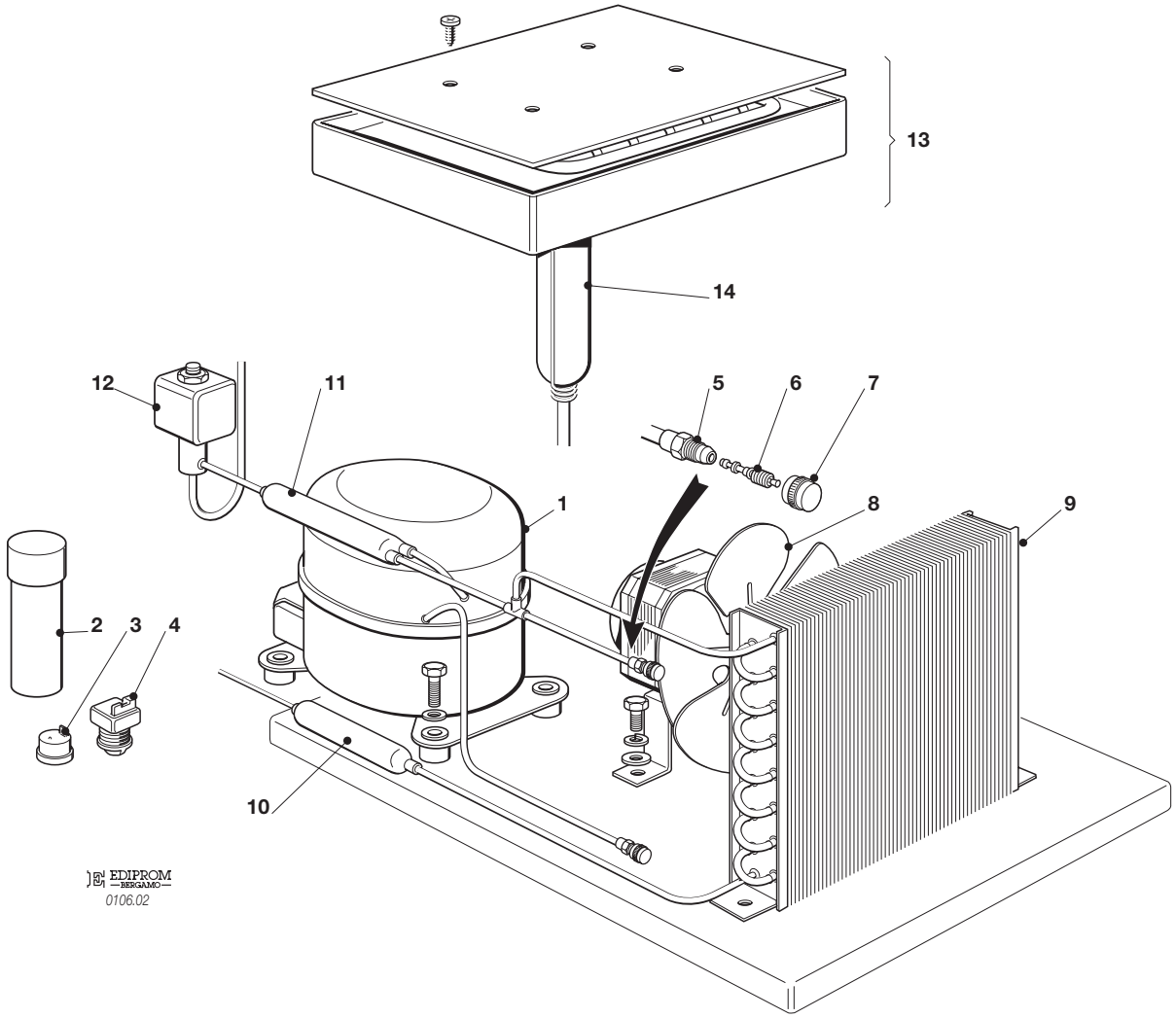
13
14
12
11
5
6
7
1
8
9
2
3
4
10
EDIPROM
BERGAMO
0106.02

SMN 35 - SMN 45 - REFRIGERANT SYSTEM AIR COOLED - SISTEMA REFRIGERANTE RAFFR. AD ARIA
CIRCUIT FRIGORIFIQUE REFROID. PAR AIR - LUFTGEKÜHLT GEFRIERSYSTEM

ITEM NO POS NO REP. NO REF. NO	PART NO - CODICE REFERENCE - STUECK NR.		DESCRIPTION	DESCRIZIONE	DESIGNATION	BESCHREIBUNG
	SMN 35	**SMN 45**				
1	670100 00	670100 01	COMPRESSOR	COMPRESSORE	COMPRESSEUR	KOMPRESSOR
2	620167 29	620167 29	START CAPACITOR	CONDENSATORE D'AVVIAMENTO	CAPACITE DE DEMARRAGE	START CONDENSATOR
3	620478 03	620058 67	PROTECTOR	PROTETTORE	PROTECTEUR	SCHUTZGERAT
4	620057 31	620057 56	RELAY	RELÈ	RELAIS	RELAIS
5	650109 00		VALVE BODY	CORPO VALVOLA	CORPS DE VANNE	VENTILGEHAUSE
6	670012 00		VALVE PISTON	PISTONCINO VALVOLA	PISTON	VENTILKOLBEN
7	650106 00		VALVE CAP	CAPPUCCIO VALVOLA	CAPUCHON DE VANNE	VENTILKLAPPE
8	620419 02 620419 32	620419 33	FAN MOTOR FAN BLADE	MOTOVENTILATORE VENTOLA	MOTO-VENTILATEUR HELICE	LÜFTERMOTOR FLÜGEL
9	620420 00	620439 00	AIR COOLED CONDENSER	CONDENSATORE AD ARIA	CONDENSEUR	KONDENSATOR
10	630003 05		DRIER	FILTRO DEUMIDIFICATORE	FILTRE DESHYDRATEUR	TROCKNER
11	630137 00	630137 01	MECHANICAL FILTER	FILTRO MECCANICO	FILTRE MECANIQUE	MECHANISCHFILTERN
12	620306 48 620306 27		HOT GAS VALVE COIL HOT GAS VALVE BODY	BOBINA VALVOLA GAS CALDO CORPO VALVOLA GAS CALDO	BOBINE VANNE GAZ CHAUDS CORP VANNE GAZ CHAUDS	HEISSGAZ VENTIL SPULE VENTILGEHAUSE
13	784488 00	784488 00	EVAPORATOR ASSY	ASSIEME EVAPORATORE	ENS. EVAPORATEUR	VERDAMPFER
14	784444 03	784444 15	ACCUMULATOR ASSY	ASSIEME ACCUMULATORE	ENS. ACCUMULATEUR	SAMMLER UND SAUGLEITUNGEN
*	620499 00	620499 00	PRESSURE CONTROL	PRESSOSTATO	PRESSOSTAT	PRESSOSTAT

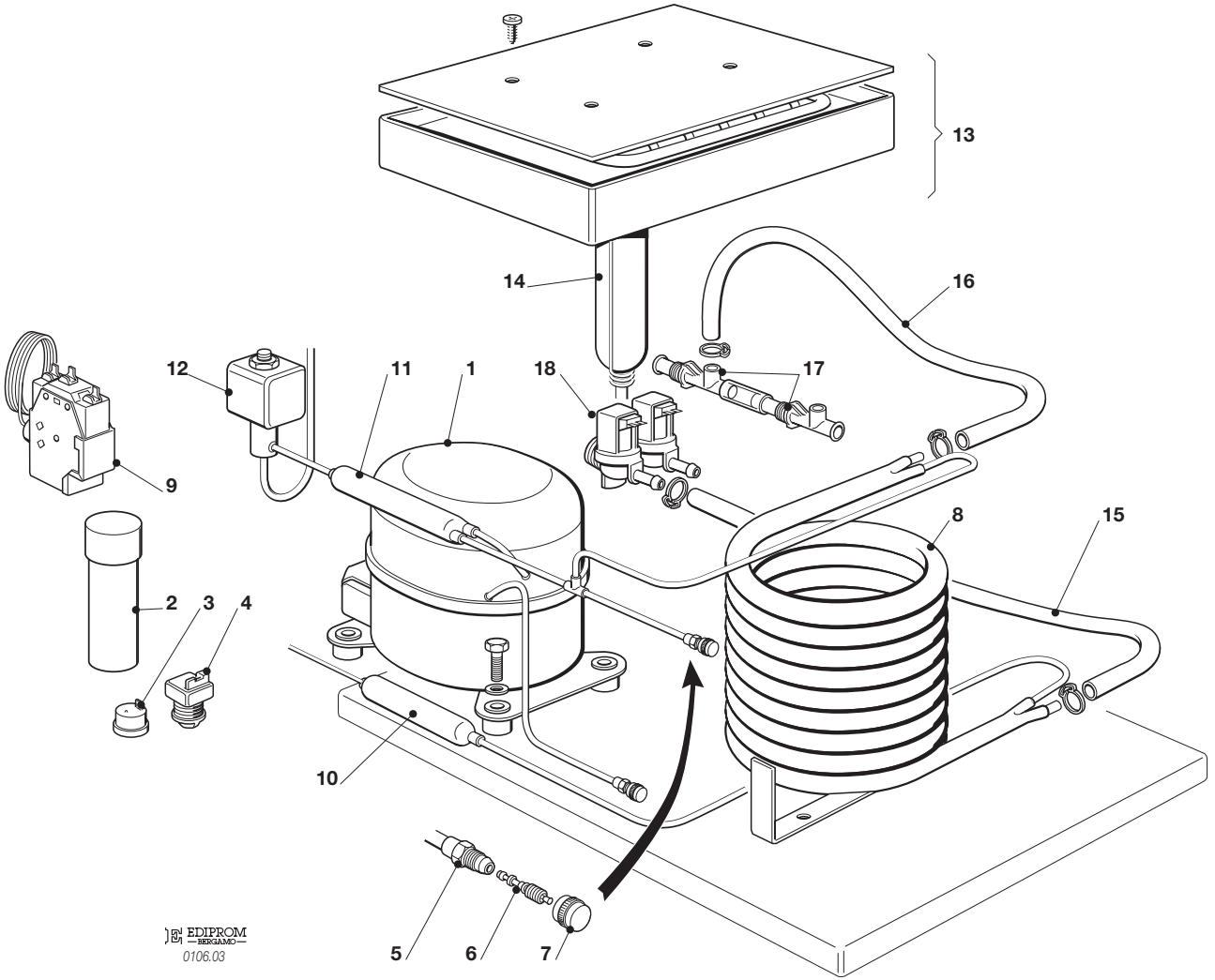
13
14
16
12
11
1
18
17
9
8
15
2
3
4
10
5
6
7
EDIPROM
BERGAMO
0106.03

SMN 35 - SMN 45 - REFRIGERANT SYSTEM WATER COOLED - SISTEMA REFRIGERANTE RAFFR. AD ACQUA
CIRCUIT FRIGORIFIQUE REFROID. PAR EAU - WASSERGEKOHL T GEFRIERSYSTEM

ITEM NO POS NO REP. NO REF. NO	PART NO - CODICE REFERENCE - STUECK NR. **SMN 35**	**SMN 45**	DESCRIPTION	DESCRIZIONE	DESIGNATION	BESCHREIBUNG
1	670100 00	67010001	COMPRESSOR	COMPRESSORE	COMPRESSEUR	KOMPRESSOR
2	620167 29	620167 29	START CAPACITOR	CONDENSATORE D'AWIAMENTO	CAPACITE DE DEMARRAGE	START CONDENSATOR
3	620478 03	620058 67	PROTECTOR	PROTETTORE	PROTECTEUR	SCHUTZGERAT
4	620057 31	620057 56	RELAY	RELÈ	RELAIS	RELAIS
5	650109 00		VALVE BODY	CORPO VALVOLA	CORPS DE VANNE	VENTILGEHAUSE
6	670012 00		VALVE PISTON	PISTONCINO VALVOLA	PISTON	VENTILKOLBEN
7	650106 00		VALVE CAP	CAPPUCCIO VALVOLA	CAPUCHON DE VANNE	VENTILKLAPPE
8	620389 00		WATER COOLED CONDENSER	CONDENSATORE ACQUA	CONDENSEUR A EAU	WASSER KONDENSATOR
9	620499 01		PRESSURE CONTROL	PRESSOSTATO	PRESSOSTAT	PRESSOSTAT
10	630003 05		DRIER	FILTRO DEUMIDIFICATORE	FILTRE DESHYDRATEUR	TROCKNER
11	630137 00	63013701	MECHANICAL FILTER	FILTRO MECCANICO	FIL TRE MECANIQUE	MECHANISCHFIL TERN
12	620306 48 620306 27		HOT GAS VALVE COI L HOT GAS VALVE BODY	BOBINA VALVOLA GAS CALDO CORPO VALVOLA GAS CALDO	BOBINE VANNE GAZ CHAUDS CORP VANNE GAZ CHAUDS	HEISSGAZ VENTI L SPULE VENTILGEHAUSE
13	784480 00	784480 01	EVAPORATOR ASSY	ASSIEME EVAPORATORE	ENS. EVAPORATEUR	VERDAMPFER
14	784444 03	784444 15	ACCUMULATOR ASSY	ASSIEME ACCUMULATORE	ENS. ACCUMULATEUR	SAMMLER UND SAUGLEITUNGEN
15	281900 01		PLASTIC TUBE - PER METER	TUBO PVC - PER METRO	TUYAU EN PLASTIQUE - POUR MT.	PLASTIK ROHR - PRO METER
16	281900 01		PLASTIC TUBE - PER METER	TUBO PVC - PER METRO	TUYAU EN PLASTIQUE - POUR MT.	PLASTIK ROHR - PRO METER
17	660993 00		WATER DRAIN FITTING	RACCORDO SCARICO ACQUA	RACCORD EVACUATION EAU	WASSERABFLUSSANSCHLUSSE
18	650105 70		WATER INLET VALVE	ELETTROV AL VOLA DOPPIA	VANNE ARRIVÈE EAU	ELEKTROVENTIL

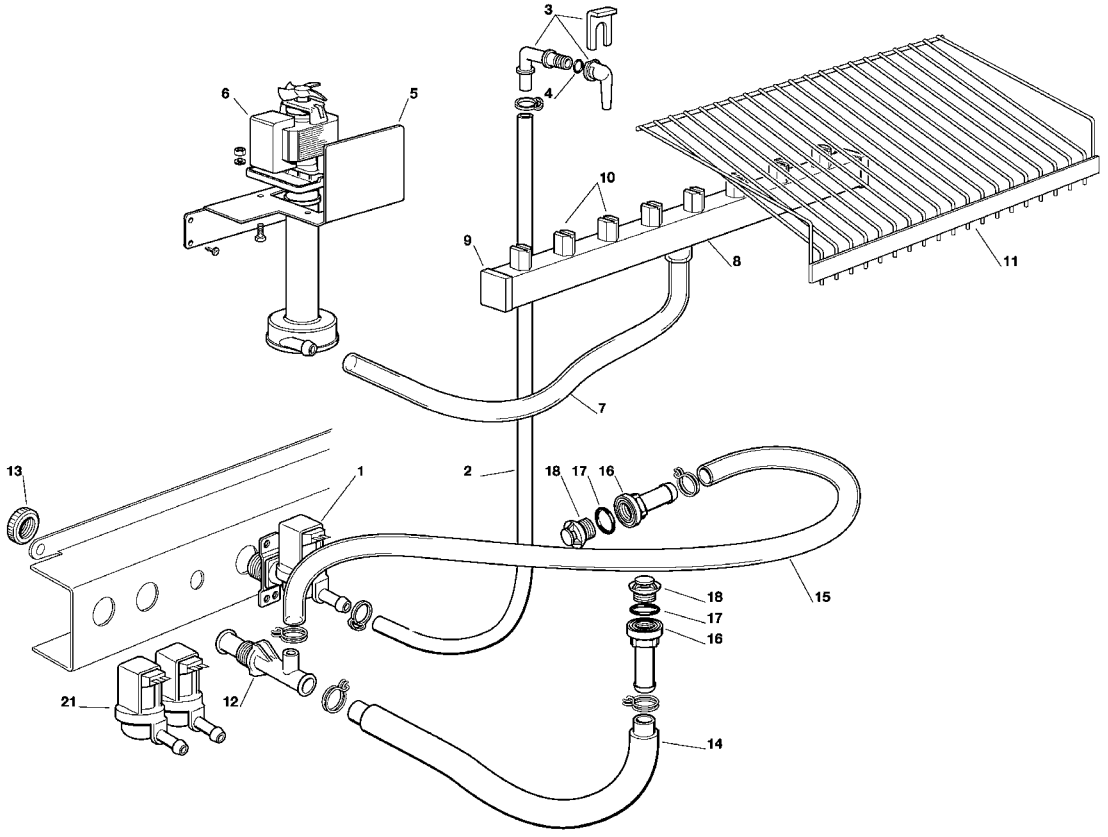
3
4
6
5
10
9
8
11
7
13
1
2
18
17
16
15
18
17
16
21
12
14

SMN 35- SMN 45 - WATER SYSTEM - CIRCUITO IDRAULICO - CIRCUIT HYDRAULIQUE – WASSERSYSTEM -

ITEM NO POS NO REP. NO REF. NO	PART NO CODICE REFERENCE STUECK NR	DESCRIPTION	DESCRIZIONE	DESIGNATION	BESCHREIBUNG
1	650105 66	WATER INLET VALVE - AIR COOLED	ELETTROVALVOLAINGR.ACQUA	ELECTROVANNE ARR. EAU - REFR. AIR	WASSEREINLAUFVENTIL - LUFT
2	281900 01	PLASTIC TUBE - PER METER	TUBO INGRESSO ACQUA	TUYAU EN PLASTIQUE - POUR MT.	PLASTIK ROHR - PRO METER
3	793172 00R	WATER INLET ELBOW ASSY	ASS. INGR. ACQUA A GOMITO	ENS. ENTREE EAU COUDEE	ABGENKELZULAUFROHR
4	640041 31	O-RING	GUARNIZIONE	JOINT TORIQUE	SIMMER RING
5	724333 00	METAL BRACKET	SUPPORTO POMPA	SUPPORT METALLIQUE	METAL TRAEGER
6	620433 00	WATER PUMP	POMPA	POMPE A EAU	WASSER PUMPE
7	610150 03	PUMP INLET WATER PIPE	TUBO MANDATA POMPA	TUYAU EVACUATION	ABFLUSSROHR
8	651502 00	SPRAY BAR	TUBO SPRUZZATORE	COLLECTEUR	KOLLEKTOR
9	660557 00	PLUG	UGELLO SPRUZZATORE	BOUCHON POUR COLLECTEUR	STOPFEN
10	660558 00	SPRAY JET	SPRUZZATORI	GICLEURS	SPROHDOSEN
11	650714 02	ICE DEFLECTOR	GRIGLIA SCORRIMENTO CUBETTI	GRILLE GLiSSEMENT GLAçON	ABGLEITGRILL
12	660224 00	WATER DRAIN FITTING	RACCORDO A "T"	RACCORD EVACUATION EAU	WASSERABFLUSSANSCHLUSSE
13	660211 01	PLASTIC RING NUT	GHIERA	COLLIER DE SERRAGE EN PLAST.	PLASTIKRING MUTTER
14	610148 20	sTORAGE BIN DRAIN	TUBO SCARICO CONTENITORE	TUYAU VIDANGE CONTENEUR	BEHALTERAUSLAUFSCHLAUCH
15	610204 00	OVERFLOW DRAIN TUBE	TUBO SCARICO TROPPO PIENO	TUYAU VIDANGE TROP PLAIN	BEHAL TER ABLAUF
16	660219 01	BIN DRAIN	RACCORDO DI SCARICO	RACCORD EVACUATION	ABFLUSSROHR
17	640134 00	O-RING	GUARNIZIONE	JOINT TORIQUE	SIMMER RING
18	660211 01	DRAIN FIL TER	FILTRO SCARICO	FILTRE EVACUATION EAU	ABFLUSSFIL TER
21	650105 70	WATER INL. VAL. - WATER COOLED	ELETTROVALVOLA INGR. ACQUA	ELECTROV. ARR. EAU c REFR. EAU	WASSEREINLAUFVENTIL - WASSER

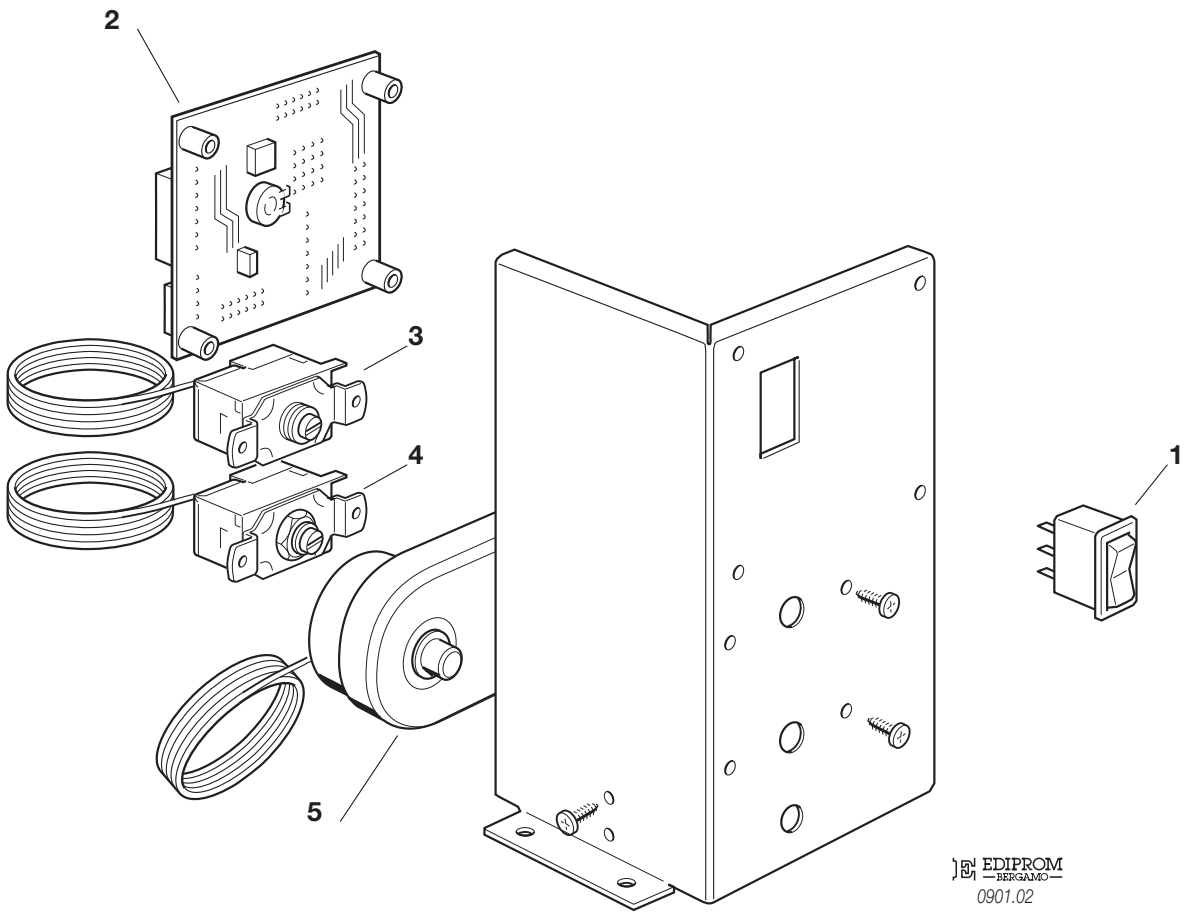

EDIPROM
BERGAMO
0901.02

SMN 35-45 - CONTROL BOX - SCATOLA DI CONTROLLO - BOITE ELECTRIQUE - SCHALTSCHRANK -

ITEM NO POS. NO REP. NO REF. NO	PART NO CODICE REFERENCE STUECK NR	DESCRIPTION	DESCRIZIONE	DESIGNATION	BESCHREIBUNG
1	620453 00	SWITCH	INTERRUTTORE LUMINOSO	INTERRUPTEUR LUMINEUX	SCHALTER
2	620507 00	ELECTRONIC TIMER	TIMER ELETTRONICO	MINUTERIE ELECTRONIQUE	ELEKTRONISCHER TIMER
4	630005 00	BIN THERMOSTAT	TERMOSTATO CONTENITORE	THERMOSTAT CONTENEUR	BEHÄLTER THERMOSTAT
3	620201 01	EVAPORATOR THERMOSTAT	TERMOSTATO EVAPORATORE	THERMOSTAT EVAPORATEUR	VERDAMPFERTHERMOSTAT
5	620443 02	THERMOSTAT - SAFETY	TERMOSTATO DI SICUREZZA	THERMOSTAT DE SECURITÉ	SICHERHEITS THERMOSTAT



Via Pascoli, 22 - 20010 Pogliano Milanese (Milano) Italy
Tel. +39 02 93900215 (Commerciale - Sales Dept.)
Tel. +39 02 93960357 (Assistenza - Service Dept.)
Fax +39 02 93900226 (Commerciale - Sales Dept.)
Fax +39 02 93960366 (Assistenza - Service Dept.)
E-mail: sales@simag.it • service@simag.it
www.simag.it