SAGI - BASE REFRIGERATA 390 lt,prof.70 cm, -2/+8°C
KIRB - 01-11-2005 » 15-06-2006

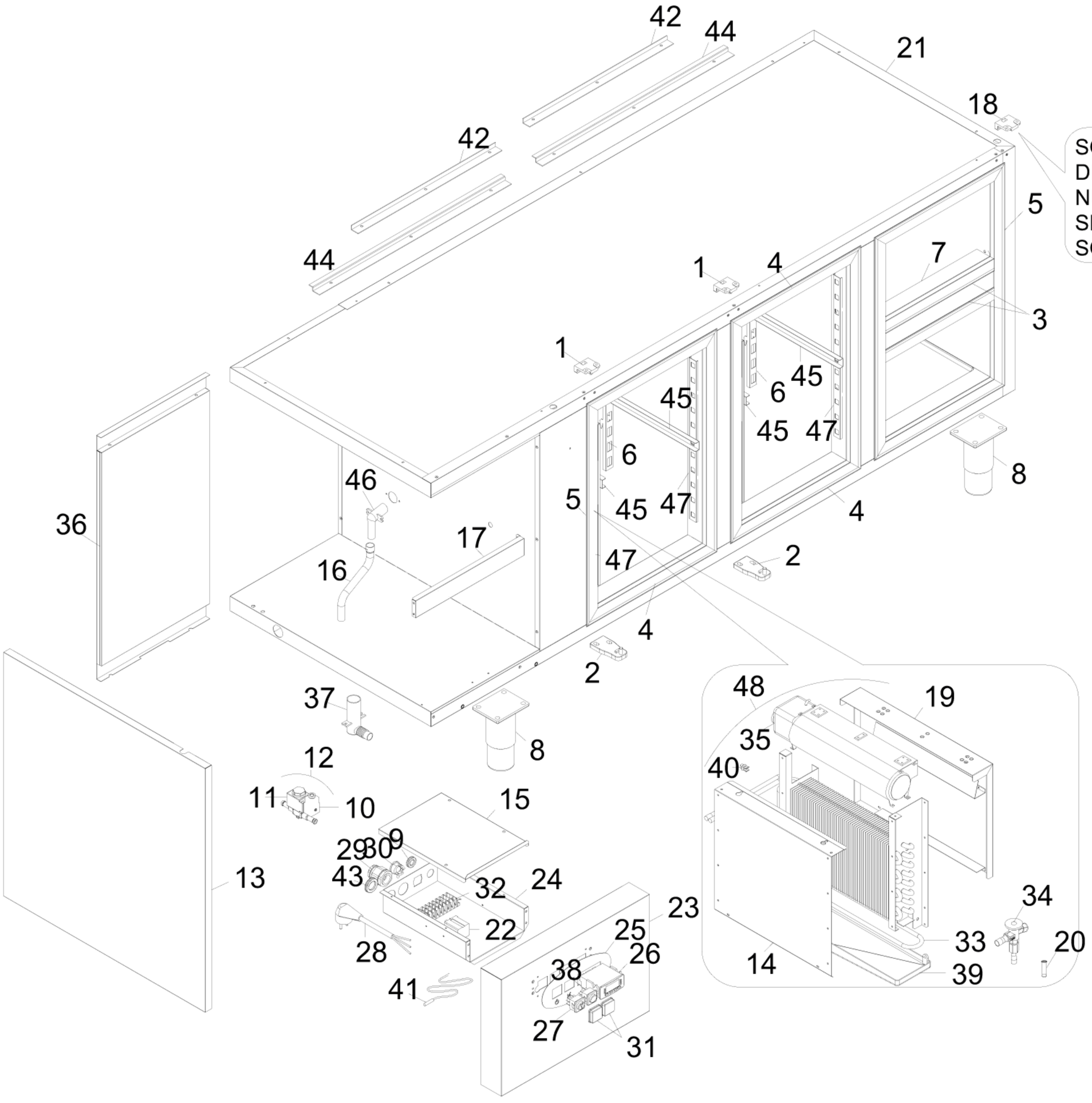

SAGI - BASE REFRIGERATA 390 lt,prof.70 cm, -2/+8°C
KIRB - A000350 - GRUPPO PORTE-CASSETTI - 01-11-2005 » 15-06-2006

## Modello Typ Model Modele Modelo

| | | KIRA<br>KIRAA<br>KIRAM<br>KIRAB<br>KIRABA<br>KIRABM | KIRA2<br>KIRA2A<br>KIRA2M | KIRB<br>KIRBA<br>KIRBM<br>KIRBB<br>KIRBBA<br>KIRBBM | KIRB2<br>KIRB2A<br>KIRB2M | KIRB4<br>KIRB4A<br>KIRB4M | KIRC<br>KIRCA<br>KIRCM<br>KIRCB<br>KIRCBA<br>KIRCBM | KIRC2<br>KIRC2A<br>KIRC2M | KIRC4<br>KIRC4A<br>KIRC4M |
|---|---|---|---|---|---|---|---|---|---|
| Num.cassetti<br>Schublad<br>Drawers<br>Tiroirs<br>Gabetas | 1/2<br>1/2SUP<br>1/2INF | 1<br>-<br>- | 1<br>1<br>1 | 1<br>-<br>- | 1<br>1<br>1 | 1<br>2<br>2 | 1<br>-<br>- | 1<br>1<br>1 | 1<br>2<br>2 |
| Porte<br>Türen<br>Doors<br>Portes<br>Puertas | | 2 | 1 | 3 | 2 | 1 | 4 | 3 | 2 |

