DESPIECES DEL SERVICIO TECNICO

# Mesas Frías para Pastelería
# Tables Froides Patissieres
# Bakery Refrigerated Counters
# Backerei-Tische
# Tavoli Refrigerati per Pasticceria

## MPP / MPN
## MPP-C / MPN-C

FEBRERO 2002

FAGOR

Fagor Industrial

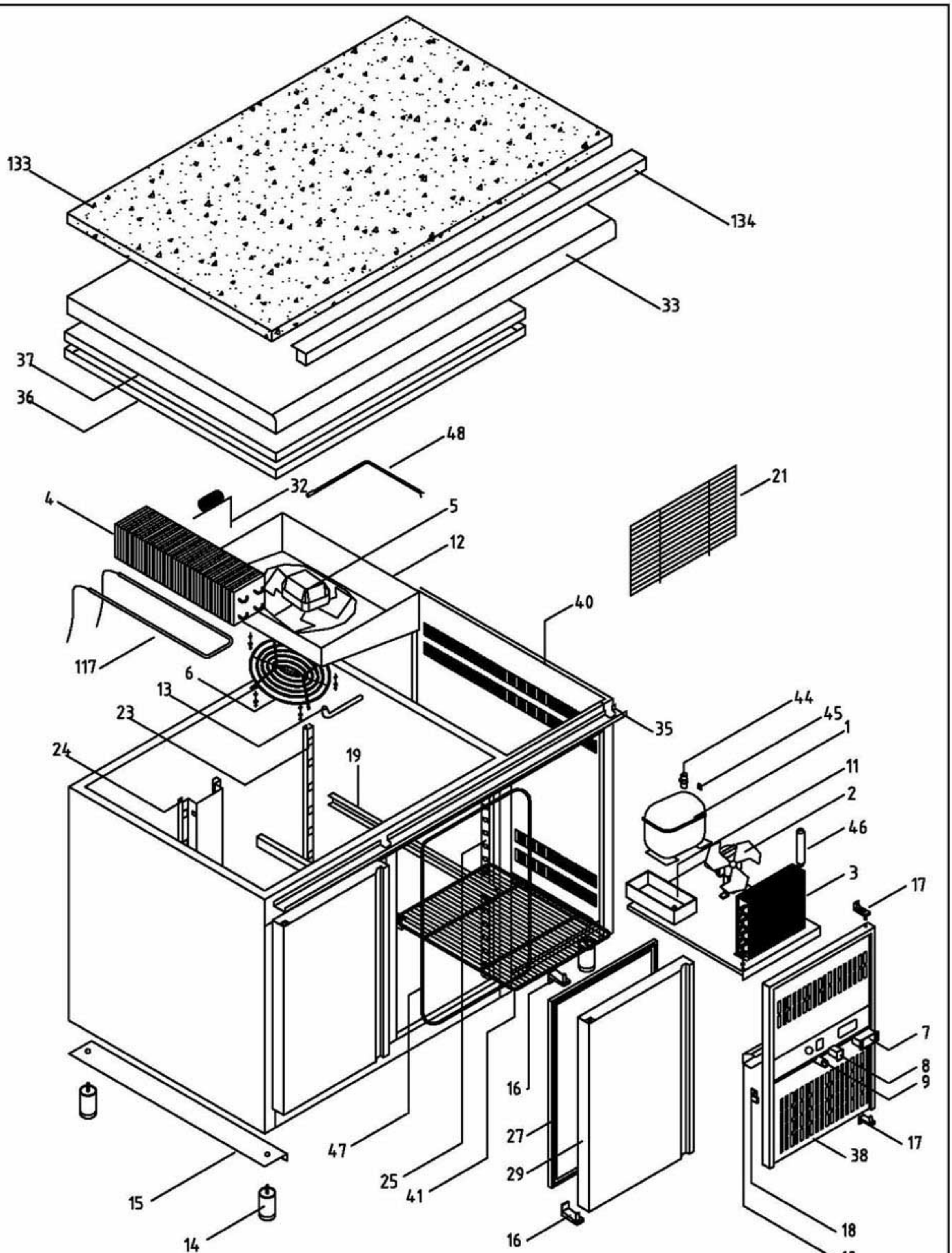


| | |
|---|---|
| COMÚN A | Mesas Frias GN 1/1 y Pastelería 400x600, refrigeración y mantenimiento de congelados |
| | Mesas Frias GN 1/1 y Pastelería 400x600, refrigeración y mantenimiento de congelados, centrales y murales |
| | |

| | Firma | Fecha | | |
|---|---|---|---|---|
| Dibujado | M. Mellado | 28/02/01 | DESPIECE MESAS FRIAS | Código DSP0143 |
| Proyectado | | | | FAGOR FAGOFRI s.a. |
| Comprobado | | | | |

FAGOR
FAGOFRI SA

## PLANO DESPIECE

| | FAGOFRI Código | MATERIAL | MODELO | DSP-0143 MPP-150 | DSP-0143 MPP-202 | DSP-0143 MPP-255 | DSP-0143 MPP-307 | DSP-0143 MPP-150-C | DSP-0143 MPP-202-C | DSP-0143 MPP-255-C | DSP-0143 MPP-307-C |
|---|---|---|---|---|---|---|---|---|---|---|---|
| | | | | 1 | 1 | 1 | 1 | 1 | 1 | 1 | 1 |
| 1 | 6001700003 | Compresor, Danfoss FR-7,5-G | | 1 | | | | 1 | | | |
| 1 | 6001700004 | Compresor, Danfoss FR-8,5-G | | | 1 | | | | 1 | | |
| 1 | 6001700007 | Compresor, Danfoss SC-12-G | | | | 1 | 1 | | | 1 | 1 |
| 2 | 6001506002 | Ventilador unidad condensadora, 10 w con pala y pata | | 1 | 1 | 1 | 1 | 1 | 1 | 1 | 1 |
| 3 | 6001911002 | Condensador, 9x2 derecha techo | | 1 | 1 | | | 1 | 1 | | |
| 3 | 6001911003 | Condensador, 9x3 derecha techo | | | | 1 | 1 | | | 1 | 1 |
| 4 | 6001902001 | Evaporador tiro forzado, B 5T 4R 330A 4S | | 1 | 1 | | | 1 | 1 | | |
| 4 | 6001902002 | Evaporador tiro forzado, B 8T 4R 330A 4S MESA FRIA | | | | 1 | 1 | | | 1 | 1 |
| 5 | 6001506001 | Ventilador Evaporador, 5 w con pala y aro | | 1 | 1 | 1 | 1 | 1 | 1 | 1 | 1 |
| 6 | 6000202216 | Rejilla protección ventilador evaporador, Plastico inyectado | | 1 | 1 | 1 | 1 | 1 | 1 | 1 | 1 |
| 7 | 6001507045 | Control digital refrigeración, CAREL IR32SE0000 con sonda y transformador | | 1 | 1 | 1 | 1 | 1 | 1 | 1 | 1 |
| 7 | 6001507046 | Control digital refrigeración, CAREL PJ32SOPOOK con sondas | | 1 | 1 | 1 | 1 | 1 | 1 | 1 | 1 |
| 7 | 6001507039 | Control digital refrigeración, ELIWELL EWDC 112 con sonda | | 1 | 1 | 1 | 1 | 1 | 1 | 1 | 1 |
| 7 | 6001507002 | Control digital refrigeración, ELIWELL EWPC 961 N con sonda y transformador | | 1 | 1 | 1 | 1 | 1 | 1 | 1 | 1 |
| 8 | 6001507003 | Interruptor general on / off, BIPOLAR N/ABMAR 220 V. IB4-3106 | | 1 | 1 | 1 | 1 | 1 | 1 | 1 | 1 |
| 9 | 6001507005 | Piloto funcionamiento compresor, L-312 Ø13 mm 220 V AMBAR | | 1 | 1 | 1 | 1 | 1 | 1 | 1 | 1 |
| 10 | 6005520103 | Protección trasera inox cuadro eléctrico mesa fria, inox | | 1 | 1 | 1 | 1 | 1 | 1 | 1 | 1 |
| 11 | 6000202204 | Bandeja evaporación automática, Plastico inyectado | | 1 | 1 | 1 | 1 | 1 | 1 | 1 | 1 |
| 12 | 6000201012 | Bandeja goteo evaporador tiro forzado, Gaveta tiro forzado mesa fria GN / pasteleria | | 1 | 1 | 1 | 1 | 1 | 1 | 1 | 1 |
| 14 | 6009990360 | Conjunto pata regulable Mesa Fria, Estanteria y Mesa Cafetera, ø50x107 / 147 | | 4 | 4 | 4 | 4 | 4 | 4 | 4 | 6 |
| 15 | 6002503002 | Base lateral apoyo mesa Pastelera, zincado 700x100 | | 1 | 1 | 1 | 1 | 1 | 1 | 1 | 1 |
| 16 | 6009992206 | Juego bisagra mesa fria apertura derecha tirador horizontal, | | 2 | 3 | 4 | 5 | 2 | 3 | 4 | 5 |
| 16 | 6009992204 | Juego bisagra mesa fria apertura derecha tirador vertical, | | 2 | 3 | 4 | 5 | 2 | 3 | 4 | 5 |
| 16 | 6009992205 | Juego bisagra mesa fria apertura izquierda tirador horizontal, | | 2 | 3 | 4 | 5 | 2 | 3 | 4 | 5 |
| 16 | 6009992203 | Juego bisagra mesa fria apertura izquierda tirador vertical, | | 2 | 3 | 4 | 5 | 2 | 3 | 4 | 5 |
| 17 | 6000202237 | Soporte rejilla cuadro de mandos, | | 2 | 2 | 2 | 2 | 4 | 4 | 4 | 4 |
| 18 | 6000202213 | Escuadra amarre rejilla cuadro de mandos, | | 1 | 1 | 1 | 1 | 2 | 2 | 2 | 2 |
| 20 | 6009990038 | Juego guias estante parrilla interior (central), Pasteleria "L" 705 mm | | | | | | 10 | 15 | 20 | 25 |
| 20 | 6009990003 | Juego guias estante parrilla interior, Pasteleria "L" 650 mm | | 10 | 15 | 20 | 25 | | | | |
| 21 | 6001802001 | Rejilla trasera protección motor mesa fria, Alambre zincado | | 1 | 1 | 1 | 1 | | | | |
| 23 | 6009990214 | Cremallera lateral trasera, mesa Snack / pasteleria | | 2 | 2 | 2 | 2 | | | | |
| 24 | 6009990216 | Cremallera central trasera, mesa Snack / pasteleria | | 1 | 2 | 3 | 4 | | | | |
| 25 | 6009990218 | Cremallera delantera, mesa fria Snack / Pasteleria / GN 1/1 | | 4 | 6 | 8 | 10 | 8 | 12 | 16 | 20 |
| 27 | 6001401104 | Burlete puerta mesa Snack, 475x605 UR-260-M | | 2 | 3 | 4 | 5 | 2 | 3 | 4 | 5 |

FAGOR
FAGOFRI SA

## PLANO DESPIECE

| | FAGOFRI Código | MATERIAL | MODELO | DSP-0143 MPP-150 | DSP-0143 MPP-202 | DSP-0143 MPP-255 | DSP-0143 MPP-307 | DSP-0143 MPP-150-C | DSP-0143 MPP-202-C | DSP-0143 MPP-255-C | DSP-0143 MPP-307-C |
|---|---|---|---|---|---|---|---|---|---|---|---|
| | | | | 1 | 1 | 1 | 1 | 1 | 1 | 1 | 1 |
| 29 | 6009990155 | Puerta refrigeración, tirador horizontal, apertura derecha, Snack / Pasteleria, 510x640 | | 2 | 3 | 4 | 5 | 2 | 3 | 4 | 5 |
| 29 | 6009990153 | Puerta refrigeración, tirador horizontal, apertura izquierda, Snack / Pasteleria, 510x640 | | 2 | 3 | 4 | 5 | 2 | 3 | 4 | 5 |
| 29 | 6009990154 | Puerta refrigeración, tirador vertical, apertura derecha, Snack / Pasteleria, 510x640 | | 2 | 3 | 4 | 5 | 2 | 3 | 4 | 5 |
| 29 | 6009990007 | Puerta refrigeración, tirador vertical, apertura izquierda, Snack / Pasteleria, 510x640 | | 2 | 3 | 4 | 5 | 2 | 3 | 4 | 5 |
| 32 | 6009991504 | Tubo capilar, 1,0x3300 | | 1 | 1 | | | 1 | 1 | | |
| 32 | 6009991507 | Tubo capilar, 1,25x2100 | | | | 1 | 1 | | | 1 | 1 |
| 33 | 6009991036 | Encimera inox. Pasteleria central, 1500x860 | | | | | | 1 | | | |
| 33 | 6009991038 | Encimera inox. Pasteleria central, 2025x860 | | | | | | | 1 | | |
| 33 | 6009991040 | Encimera inox. Pasteleria central, 2550x860 | | | | | | | | 1 | |
| 33 | 6009991042 | Encimera inox. Pasteleria central, 3075x860 | | | | | | | | | 1 |
| 33 | 6009991315 | Encimera inox. Pasteleria especial 1500x800 peto 100 mm | | 1 | | | | | | | |
| 33 | 6009991159 | Encimera inox. Pasteleria especial 1500x800 peto 45 mm | | 1 | | | | | | | |
| 33 | 6009991309 | Encimera inox. Pasteleria especial 2025x800 peto 100 mm | | | 1 | | | | | | |
| 33 | 6009991162 | Encimera inox. Pasteleria especial 2025x800 peto 45 mm | | | 1 | | | | | | |
| 33 | 6009991311 | Encimera inox. Pasteleria especial 2550x800 peto 100 mm | | | | 1 | | | | | |
| 33 | 6009991163 | Encimera inox. Pasteleria especial 2550x800 peto 45 mm | | | | 1 | | | | | |
| 33 | 6009991313 | Encimera inox. Pasteleria especial 3075x800 peto 100 mm | | | | | 1 | | | | |
| 33 | 6009991165 | Encimera inox. Pasteleria especial 3075x800 peto 45 mm | | | | | 1 | | | | |
| 33 | 6009991028 | Encimera inox. Pasteleria, 1500x800 | | 1 | | | | | | | |
| 33 | 6009991030 | Encimera inox. Pasteleria, 2025x800 | | | 1 | | | | | | |
| 33 | 6009991032 | Encimera inox. Pasteleria, 2550x800 | | | | 1 | | | | | |
| 33 | 6009991034 | Encimera inox. Pasteleria, 3075x800 | | | | | 1 | | | | |
| 35 | 6009991124 | Protector encimera, aluminio 1191x57 | | 1 | | | | 1 | | | |
| 35 | 6009991115 | Protector encimera, aluminio 1491x57 | | 1 | | | | 1 | | | |
| 35 | 6009991126 | Protector encimera, aluminio 1700x57 | | | 1 | | | | 1 | | |
| 35 | 6009991130 | Protector encimera, aluminio 1722+1124x57 | | | | | 1 | | | | 1 |
| 35 | 6009991121 | Protector encimera, aluminio 1722+1424x57 | | | | | 1 | | | | 1 |
| 35 | 6009991128 | Protector encimera, aluminio 1722+599x57 | | | | 1 | | | | 1 | |
| 35 | 6009991119 | Protector encimera, aluminio 1722+899x57 | | | | 1 | | | | 1 | |
| 35 | 6009991117 | Protector encimera, aluminio 2000x57 | | | 1 | | | | 1 | | |
| 36 | 6009991132 | Techo interior, aluminio 1000x670 | | 1 | | | | 1 | | | |
| 36 | 6009991135 | Techo interior, aluminio 1525x670 | | | 1 | | | | 1 | | |
| 36 | 6009991138 | Techo interior, aluminio 2050x670 | | | | 1 | | | | 1 | |
| 36 | 6009991141 | Techo interior, aluminio 2575x670 | | | | | 1 | | | | 1 |

FAGOR
FAGOFRI SA

## PLANO DESPIECE

| | FAGOFRI Código | MATERIAL | DSP-0143 MPP-150 | DSP-0143 MPP-202 | DSP-0143 MPP-255 | DSP-0143 MPP-307 | DSP-0143 MPP-150-C | DSP-0143 MPP-202-C | DSP-0143 MPP-255-C | DSP-0143 MPP-307-C |
|---|---|---|---|---|---|---|---|---|---|---|
| MODELO | | | 1 | 1 | 1 | 1 | 1 | 1 | 1 | 1 |
| 37 | 6009991201 | Aislamiento techo interior, porexpan 1010x666x30 | 1 | | | | 1 | | | |
| 37 | 6009991204 | Aislamiento techo interior, porexpan 1535x666x30 | | 1 | | | | 1 | | |
| 37 | 6009991207 | Aislamiento techo interior, porexpan 2060x666x30 | | | 1 | | | | 1 | |
| 37 | 6009991210 | Aislamiento techo interior, porexpan 2585x666x30 | | | | 1 | | | | 1 |
| 38 | 6009990005 | Rejilla cuadro de mandos apertura derecha, Acero inox 427x645 | 1 | 1 | 1 | 1 | 2 | 2 | 2 | 2 |
| 38 | 6009990130 | Rejilla cuadro de mandos apertura derecha, Acero inox 427x645 | 1 | 1 | 1 | 1 | 2 | 2 | 2 | 2 |
| 40 | 6009990048 | Costado lado grupo Mesa Pastelera, Acero inox 735x725 | 1 | 1 | 1 | 1 | 1 | 1 | 1 | 1 |
| 41 | 6001801004 | Estante parrilla pastelera, Alambre plastificado 400x600 | 2 | 3 | 4 | 5 | 2 | 3 | 4 | 5 |
| 42 | 6001507041 | Interruptor paro ventilador tiro forzado (MESAS FRIAS), Pulsador 1005172 NA/M14,2S4,BM | 1 | 1 | 1 | 1 | 2 | 2 | 2 | 2 |
| 44 | 6002000032 | Relé de arranque compresor FR-7,5-G, Danfoss 117U6001 | 1 | | | | 1 | | | |
| 44 | 6002000031 | Relé de arranque compresor FR-8,5-G, Danfoss 117U6015 | | 1 | | | | 1 | | |
| 44 | 6004000003 | Relé de arranque compresor SC-12-G, Danfoss 117U6003 | | | 1 | 1 | | | 1 | 1 |
| 45 | 6004000008 | Condensador de arranque FR, Danfoss 117U5015 | 1 | 1 | | | 1 | 1 | | |
| 45 | 6004000009 | Condensador de arranque SC, Danfoss 117U5017 | | | 1 | 1 | | | 1 | 1 |
| 46 | 6000601003 | Filtro secador, 40 gr. 1/4 x 1/4 | 1 | 1 | 1 | 1 | 1 | 1 | 1 | 1 |
| 47 | 6001508001 | Resistencia marco puerta snack-1, 10 W x m, 2100+600 | 1 | 1 | 1 | 1 | 2 | 2 | 2 | 2 |
| 47 | 6001508002 | Resistencia marco puerta snack-2, 10 W x m, 2100+200+600 | 1 | 2 | 3 | 4 | 2 | 4 | 6 | 8 |
| 48 | 6002000057 | Sonda termostato, NTC 938 Ohm | 1 | 1 | 1 | 1 | 1 | 1 | 1 | 1 |
| 134 | 6005510323 | Decorativo mesa fria Snack / Pastelera apertura derecha, inox satinado 1494x45 | 1 | | | | 1 | | | |
| 134 | 6005510324 | Decorativo mesa fria Snack / Pastelera apertura derecha, inox satinado 2022x45 | | 1 | | | | 1 | | |
| 134 | 6005510325 | Decorativo mesa fria Snack / Pastelera apertura derecha, inox satinado 2544x45 | | | 1 | | | | 1 | |
| 134 | 6005510326 | Decorativo mesa fria Snack / Pastelera apertura derecha, inox satinado 3069x45 | | | | 1 | | | | 1 |
| 134 | 6005510476 | Decorativo mesa fria Snack / Pastelera apertura izquierda, inox satinado 1494x45 | 1 | | | | 1 | | | |
| 134 | 6005510477 | Decorativo mesa fria Snack / Pastelera apertura izquierda, inox satinado 2022x45 | | 1 | | | | 1 | | |
| 134 | 6005510478 | Decorativo mesa fria Snack / Pastelera apertura izquierda, inox satinado 2544x45 | | | 1 | | | | 1 | |
| 134 | 6005510479 | Decorativo mesa fria Snack / Pastelera apertura izquierda, inox satinado 3069x45 | | | | 1 | | | | 1 |

FAGOR
FAGOFRI SA

**PLANO DESPIECE**

| | FAGOFRI Código | MATERIAL | MODELO | DSP-0143 MPN-150 | DSP-0143 MPN-202 | DSP-0143 MPN-255 | DSP-0143 MPN-307 | MPN-150-C | MPN-202-C | MPN-255-C | MPN-307-C |
|---|---|---|---|---|---|---|---|---|---|---|---|
| | | | | 1 | 1 | 1 | 1 | 1 | 1 | 1 | 1 |
| 1 | 6001710004 | Compresor, ASPERA J-2192-GK | | | | 1 | 1 | | | 1 | 1 |
| 1 | 6001710001 | Compresor, Danfoss SC-12-CL | | 1 | | | | 1 | | | |
| 1 | 6001710002 | Compresor, Danfoss SC-15-CL | | | 1 | | | | 1 | | |
| 2 | 6001506002 | Ventilador unidad condensadora, 10 w con pala y pata | | 1 | 1 | 1 | 1 | 1 | 1 | 1 | 1 |
| 3 | 6001911005 | Condensador, 10x4 derecha techo | | 1 | 1 | 1 | 1 | 1 | 1 | 1 | 1 |
| 4 | 6001903001 | Evaporador, Bateria FC-61-B | | 1 | | | | 1 | | | |
| 4 | 6001903003 | Evaporador, Bateria FC-71-B | | | 1 | 1 | 1 | | 1 | 1 | 1 |
| 7 | 6001507044 | Control digital mant. congelados, Carel PJ32C00000 (220 v, 3 botones, 3 reles) | | 1 | 1 | 1 | 1 | 1 | 1 | 1 | 1 |
| 7 | 6001507043 | Control digital mant. congelados, Carel PJ32SE (12 v, 4 botones, 4 reles) | | 1 | 1 | 1 | 1 | 1 | 1 | 1 | 1 |
| 7 | 6001507012 | Control digital mant. congelados, ELIWELL EWPC 974 con sondas y tranformador | | 1 | 1 | 1 | 1 | 1 | 1 | 1 | 1 |
| 7 | 6001507042 | Control digital mant. congelados, ELIWELL EWPX-174 con sondas y transformador | | 1 | 1 | 1 | 1 | 1 | 1 | 1 | 1 |
| 8 | 6001507003 | Interruptor general on / off, BIPOLAR N/ABMAR 220 V. IB4-3106 | | 1 | 1 | 1 | 1 | 1 | 1 | 1 | 1 |
| 9 | 6001507005 | Piloto funcionamiento compresor, L-312 Ø13 mm 220 V AMBAR | | 1 | 1 | 1 | 1 | 1 | 1 | 1 | 1 |
| 10 | 6005520103 | Protección trasera inox cuadro eléctrico mesa fría, inox | | 1 | 1 | 1 | 1 | 1 | 1 | 1 | 1 |
| 11 | 6000202204 | Bandeja evaporación automática, Plastico inyectado | | 1 | 1 | 1 | 1 | 1 | 1 | 1 | 1 |
| 12 | | Bandeja goteo evaporador FC-61-B mesa fria, Aluminio | | 1 | | | | 1 | | | |
| 12 | 6004000017 | Bandeja goteo evaporador FC-71-B mesa fria, Aluminio | | | 1 | 1 | 1 | | 1 | 1 | 1 |
| 14 | 6009990360 | Conjunto pata regulable Mesa Fria, Estanteria y Mesa Cafetera, ø50x107 / 147 | | 4 | 4 | 4 | 4 | 4 | 4 | 4 | 6 |
| 15 | 6002503002 | Base lateral apoyo mesa Pastelera, zincado 700x100 | | 1 | 1 | 1 | 1 | 1 | 1 | 1 | 1 |
| 16 | 6009992206 | Juego bisagra mesa fria apertura derecha tirador horizontal, | | 2 | 3 | 4 | 5 | 2 | 3 | 4 | 5 |
| 16 | 6009992204 | Juego bisagra mesa fria apertura derecha tirador vertical, | | 2 | 3 | 4 | 5 | 2 | 3 | 4 | 5 |
| 16 | 6009992205 | Juego bisagra mesa fria apertura izquierda tirador horizontal, | | 2 | 3 | 4 | 5 | 2 | 3 | 4 | 5 |
| 16 | 6009992203 | Juego bisagra mesa fria apertura izquierda tirador vertical, | | 2 | 3 | 4 | 5 | 2 | 3 | 4 | 5 |
| 17 | 6000202237 | Soporte rejilla cuadro de mandos, | | 2 | 2 | 2 | 2 | 4 | 4 | 4 | 4 |
| 18 | 6000202213 | Escuadra amarre rejilla cuadro de mandos, | | 1 | 1 | 1 | 1 | 2 | 2 | 2 | 2 |
| 20 | 6009990038 | Juego guias estante parrilla interior (central), Pasteleria "L" 705 mm | | | | | | 10 | 15 | 20 | 25 |
| 20 | 6009990003 | Juego guias estante parrilla interior, Pasteleria "L" 650 mm | | 10 | 15 | 20 | 25 | | | | |
| 21 | 6001802001 | Rejilla trasera protección motor mesa fria, Alambre zincado | | 1 | 1 | 1 | 1 | 1 | 1 | 1 | 1 |
| 23 | 6009990214 | Cremallera lateral trasera, mesa Snack / pasteleria | | 2 | 2 | 2 | 2 | | | | |
| 24 | 6009990216 | Cremallera central trasera, mesa Snack / pasteleria | | 1 | 2 | 3 | 4 | | | | |
| 25 | 6009990218 | Cremallera delantera, mesa fria Snack / Pasteleria / GN 1/1 | | 4 | 6 | 8 | 10 | 8 | 12 | 16 | 20 |
| 27 | 6001401104 | Burlete puerta mesa Snack, 475x605 UR-260-M | | 2 | 3 | 4 | 5 | 2 | 3 | 4 | 5 |
| 29 | 6009990175 | Puerta mant cong tirador horizontal, apertura derecha, Snack / Pasteleria, 510x640 | | 2 | 3 | 4 | 5 | 2 | 3 | 4 | 5 |
| 29 | 6009990173 | Puerta mant cong tirador horizontal, apertura izquierda, Snack / Pasteleria, 510x640 | | 2 | 3 | 4 | 5 | 2 | 3 | 4 | 5 |

FAGOR
FAGOFRI SA

**PLANO DESPIECE**

| | FAGOFRI Código | MATERIAL | MODELO | DSP-0143 MPN-150 | DSP-0143 MPN-202 | DSP-0143 MPN-255 | DSP-0143 MPN-307 | MPN-150-C | MPN-202-C | MPN-255-C | MPN-307-C |
|---|---|---|---|---|---|---|---|---|---|---|---|
| | | | | 1 | 1 | 1 | 1 | 1 | 1 | 1 | 1 |
| 29 | 6009990174 | Puerta mant cong tirador vertical, apertura derecha, Snack / Pasteleria, 510x640 | | 2 | 3 | 4 | 5 | 2 | 3 | 4 | 5 |
| 29 | 6009990013 | Puerta mant cong tirador vertical, apertura izquierda, Snack / Pasteleria, 510x640 | | 2 | 3 | 4 | 5 | 2 | 3 | 4 | 5 |
| 32 | 6009991510 | Tubo capilar, 1,25x2900 | | | 1 | | | | 1 | | |
| 32 | 6009991508 | Tubo capilar, 1,25x3500 | | 1 | | | | 1 | | | |
| 32 | 6009991516 | Tubo capilar, 1,5x2000 | | | | 1 | 1 | | | 1 | 1 |
| 33 | 6009991036 | Encimera inox. Pasteleria central, 1500x860 | | | | | | 1 | | | |
| 33 | 6009991038 | Encimera inox. Pasteleria central, 2025x860 | | | | | | | 1 | | |
| 33 | 6009991040 | Encimera inox. Pasteleria central, 2550x860 | | | | | | | | 1 | |
| 33 | 6009991042 | Encimera inox. Pasteleria central, 3075x860 | | | | | | | | | 1 |
| 33 | 6009991315 | Encimera inox. Pasteleria especial 1500x800 peto 100 mm | | 1 | | | | | | | |
| 33 | 6009991159 | Encimera inox. Pasteleria especial 1500x800 peto 45 mm | | 1 | | | | | | | |
| 33 | 6009991309 | Encimera inox. Pasteleria especial 2025x800 peto 100 mm | | | 1 | | | | | | |
| 33 | 6009991162 | Encimera inox. Pasteleria especial 2025x800 peto 45 mm | | | 1 | | | | | | |
| 33 | 6009991311 | Encimera inox. Pasteleria especial 2550x800 peto 100 mm | | | | 1 | | | | | |
| 33 | 6009991163 | Encimera inox. Pasteleria especial 2550x800 peto 45 mm | | | | 1 | | | | | |
| 33 | 6009991313 | Encimera inox. Pasteleria especial 3075x800 peto 100 mm | | | | | 1 | | | | |
| 33 | 6009991165 | Encimera inox. Pasteleria especial 3075x800 peto 45 mm | | | | | 1 | | | | |
| 33 | 6009991028 | Encimera inox. Pasteleria, 1500x800 | | 1 | | | | | | | |
| 33 | 6009991030 | Encimera inox. Pasteleria, 2025x800 | | | 1 | | | | | | |
| 33 | 6009991032 | Encimera inox. Pasteleria, 2550x800 | | | | 1 | | | | | |
| 33 | 6009991034 | Encimera inox. Pasteleria, 3075x800 | | | | | 1 | | | | |
| 35 | 6009991124 | Protector encimera, aluminio 1191x57 | | 1 | | | | 1 | | | |
| 35 | 6009991115 | Protector encimera, aluminio 1491x57 | | 1 | | | | 1 | | | |
| 35 | 6009991126 | Protector encimera, aluminio 1700x57 | | | 1 | | | | 1 | | |
| 35 | 6009991130 | Protector encimera, aluminio 1722+1124x57 | | | | | 1 | | | | 1 |
| 35 | 6009991121 | Protector encimera, aluminio 1722+1424x57 | | | | | 1 | | | | 1 |
| 35 | 6009991128 | Protector encimera, aluminio 1722+599x57 | | | | 1 | | | | 1 | |
| 35 | 6009991119 | Protector encimera, aluminio 1722+899x57 | | | | 1 | | | | 1 | |
| 35 | 6009991117 | Protector encimera, aluminio 2000x57 | | | 1 | | | | 1 | | |
| 36 | 6009991132 | Techo interior, aluminio 1000x670 | | 1 | | | | 1 | | | |
| 36 | 6009991135 | Techo interior, aluminio 1525x670 | | | 1 | | | | 1 | | |
| 36 | 6009991138 | Techo interior, aluminio 2050x670 | | | | 1 | | | | 1 | |
| 36 | 6009991141 | Techo interior, aluminio 2575x670 | | | | | 1 | | | | 1 |
| 37 | 6009991201 | Aislamiento techo interior, porexpan 1010x666x30 | | 1 | | | | 1 | | | |

FAGOR
FAGOFRI SA

**PLANO DESPIECE**

| | FAGOFRI Código | MATERIAL | DSP-0143 MPN-150 | DSP-0143 MPN-202 | DSP-0143 MPN-255 | DSP-0143 MPN-307 | MPN-150-C | MPN-202-C | MPN-255-C | MPN-307-C |
|---|---|---|---|---|---|---|---|---|---|---|
| | | **MODELO** | 1 | 1 | 1 | 1 | 1 | 1 | 1 | 1 |
| 37 | 6009991204 | Aislamiento techo interior, porexpan 1535x666x30 | | 1 | | | | 1 | | |
| 37 | 6009991207 | Aislamiento techo interior, porexpan 2060x666x30 | | | 1 | | | | 1 | |
| 37 | 6009991210 | Aislamiento techo interior, porexpan 2585x666x30 | | | | 1 | | | | 1 |
| 38 | 6009990005 | Rejilla cuadro de mandos apertura derecha, Acero inox 427x645 | 1 | 1 | 1 | 1 | 2 | 2 | 2 | 2 |
| 38 | 6009990130 | Rejilla cuadro de mandos apertura derecha, Acero inox 427x645 | 1 | 1 | 1 | 1 | 2 | 2 | 2 | 2 |
| 40 | 6009990048 | Costado lado grupo Mesa Pastelera, Acero inox 735x725 | 1 | 1 | 1 | 1 | 1 | 1 | 1 | 1 |
| 41 | 6001801004 | Estante parrilla pastelera, Alambre plastificado 400x600 | 2 | 3 | 4 | 5 | 2 | 3 | 4 | 5 |
| 42 | 6001507041 | Interruptor paro ventilador tiro forzado (MESAS FRIAS), Pulsador 1005172 NA/M14,2S4,BM | 1 | 1 | 1 | 1 | 2 | 2 | 2 | 2 |
| 44 | 6004000002 | Relé de arranque compresor SC-12-CL, Danfoss 117U6019 | | 1 | | | | 1 | | |
| 44 | 6004000004 | Relé de arranque compresor SC-15-CL, Danfoss 117U6005 | 1 | | | | 1 | | | |
| 44 | 6004000005 | Relé de arranque compresor SC-18-CL, Danfoss 117 / 7012 | | | 1 | 1 | | | 1 | 1 |
| 45 | 6004000009 | Condensador de arranque SC, Danfoss 117U5017 | 1 | 1 | 1 | 1 | 1 | 1 | 1 | 1 |
| 46 | 6000601003 | Filtro secador, 40 gr. 1/4 x 1/4 | 1 | 1 | 1 | 1 | 1 | 1 | 1 | 1 |
| 47 | 6001508001 | Resistencia marco puerta snack-1, 10 W x m, 2100+600 | 1 | 1 | 1 | 1 | 2 | 2 | 2 | 2 |
| 47 | 6001508002 | Resistencia marco puerta snack-2, 10 W x m, 2100+200+600 | 1 | 2 | 3 | 4 | 2 | 4 | 6 | 8 |
| 48 | 6002000057 | Sonda termostato, NTC 938 Ohm | 2 | 2 | 2 | 2 | 2 | 2 | 2 | 2 |
| 117 | 6001508011 | Resistencia bandeja goteo evaporador, 18 w | 1 | 1 | 1 | 1 | 1 | 1 | 1 | 1 |
| 117 | 6001508021 | Resistencia descarche evaporador 61 - 71, 350 w cable corto | 1 | 1 | 1 | 1 | 1 | 1 | 1 | 1 |
| 134 | 6005510323 | Decorativo mesa fria Snack / Pastelera apertura derecha, inox satinado 1494x45 | 1 | | | | 1 | | | |
| 134 | 6005510324 | Decorativo mesa fria Snack / Pastelera apertura derecha, inox satinado 2022x45 | | 1 | | | | 1 | | |
| 134 | 6005510325 | Decorativo mesa fria Snack / Pastelera apertura derecha, inox satinado 2544x45 | | | 1 | | | | 1 | |
| 134 | 6005510326 | Decorativo mesa fria Snack / Pastelera apertura derecha, inox satinado 3069x45 | | | | 1 | | | | 1 |
| 134 | 6005510476 | Decorativo mesa fria Snack / Pastelera apertura izquierda, inox satinado 1494x45 | 1 | | | | 1 | | | |
| 134 | 6005510477 | Decorativo mesa fria Snack / Pastelera apertura izquierda, inox satinado 2022x45 | | 1 | | | | 1 | | |
| 134 | 6005510478 | Decorativo mesa fria Snack / Pastelera apertura izquierda, inox satinado 2544x45 | | | 1 | | | | 1 | |
| 134 | 6005510479 | Decorativo mesa fria Snack / Pastelera apertura izquierda, inox satinado 3069x45 | | | | 1 | | | | 1 |

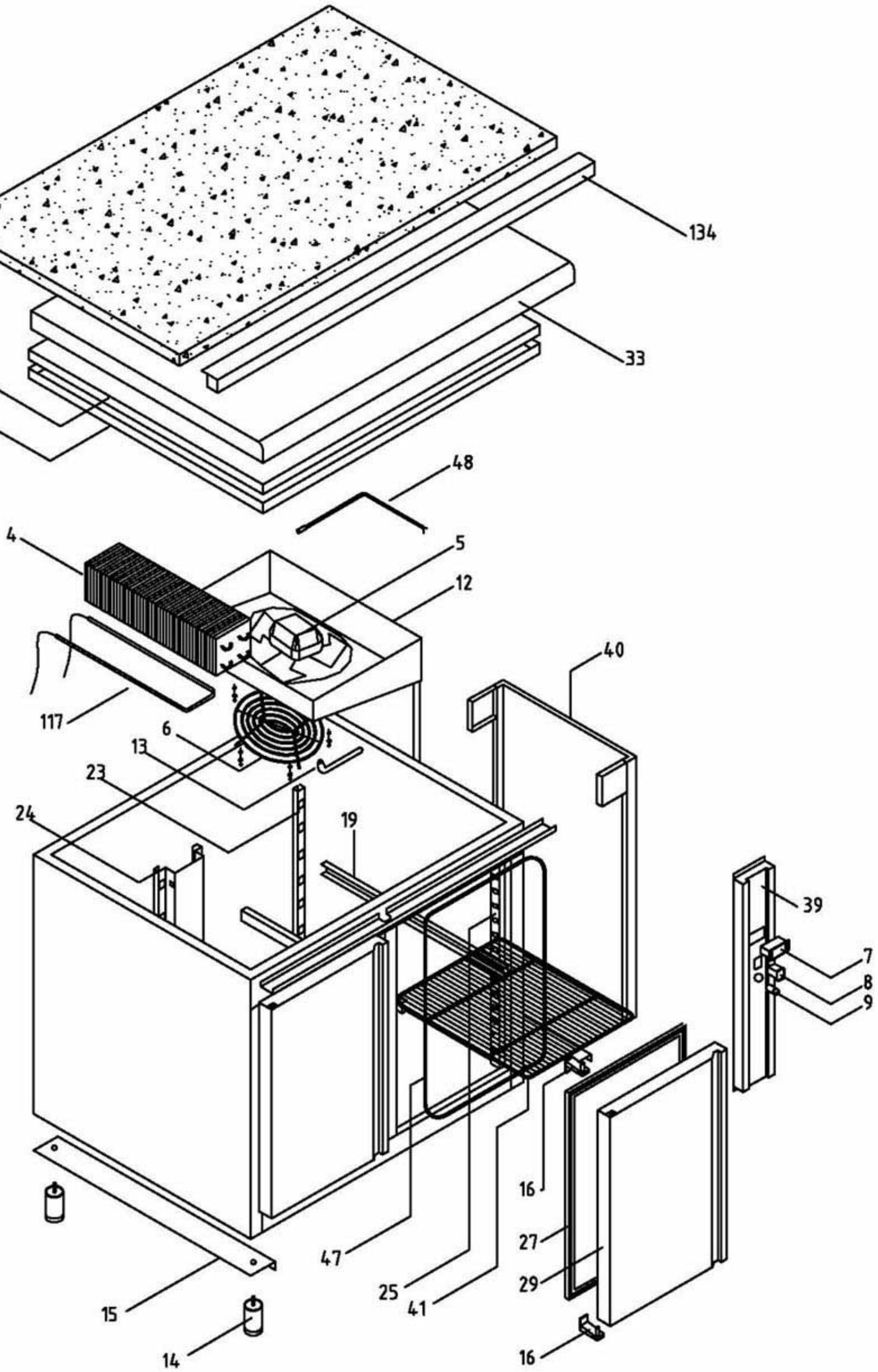


COMÚN A

Mesas Frias GN 1/1 y Pastelería 400x600, refrigeración y mantenimiento de congelados, preinstalación

Mesas Frias GN 1/1 y Pastelería 400x600, refrigeración y mantenimiento de congelados, centrales y murales

| | Firma | Fecha |
|---|---|---|
| Dibujado | M. Mellado | 28/02/01 |
| Proyectado | | |
| Comprobado | | |

# DESPIECE MESAS FRIAS PREINSTALACION

Código: DSP0144

FAGOR
FAGOFRI s.a.

FAGOR
FAGOFRI SA

**PLANO DESPIECE**

| | FAGOFRI Código | MATERIAL | MODELO | DSP-0144 MPP-117-R | DSP-0144 MPP-169-R | DSP-0144 MPP-222-R | DSP-0144 MPP-274-R | DSP-0144 MPP-117-R/C | DSP-0144 MPP-169-R/C | DSP-0144 MPP-222-R/C | DSP-0144 MPP-274-R/C |
|---|---|---|---|---|---|---|---|---|---|---|---|
| | | | | 1 | 1 | 1 | 1 | 1 | 1 | 1 | 1 |
| 4 | 6001902001 | Evaporador tiro forzado, B 5T 4R 330A 4S | | 1 | 1 | | | 1 | 1 | | |
| 4 | 6001902002 | Evaporador tiro forzado, B 8T 4R 330A 4S MESA FRIA | | | | 1 | 1 | | | 1 | 1 |
| 5 | 6001506001 | Ventilador Evaporador, 5 w con pala y aro | | 1 | 1 | 1 | 1 | 1 | 1 | 1 | 1 |
| 6 | 6000202216 | Rejilla protección ventilador evaporador, Plastico inyectado | | 1 | 1 | 1 | 1 | 1 | 1 | 1 | 1 |
| 7 | 6001507045 | Control digital refrigeración, CAREL IR32SE0000 con sonda y transformador | | 1 | 1 | 1 | 1 | 1 | 1 | 1 | 1 |
| 7 | 6001507046 | Control digital refrigeración, CAREL PJ32SOPOOK con sondas | | 1 | 1 | 1 | 1 | 1 | 1 | 1 | 1 |
| 7 | 6001507039 | Control digital refrigeración, ELIWELL EWDC 112 con sonda | | 1 | 1 | 1 | 1 | 1 | 1 | 1 | 1 |
| 7 | 6001507002 | Control digital refrigeración, ELIWELL EWPC 961 N con sonda y transformador | | 1 | 1 | 1 | 1 | 1 | 1 | 1 | 1 |
| 8 | 6001507003 | Interruptor general on / off, BIPOLAR N/ABMAR 220 V. IB4-3106 | | 1 | 1 | 1 | 1 | 1 | 1 | 1 | 1 |
| 9 | 6001507005 | Piloto funcionamiento compresor, L-312 Ø13 mm 220 V AMBAR | | 1 | 1 | 1 | 1 | 1 | 1 | 1 | 1 |
| 12 | 6000201012 | Bandeja goteo evaporador tiro forzado, Gaveta tiro forzado mesa fría GN / pastelería | | 1 | 1 | 1 | 1 | 1 | 1 | 1 | 1 |
| 14 | 6009990360 | Conjunto pata regulable Mesa Fria, Estanteria y Mesa Cafetera, ø50x107 / 147 | | 4 | 4 | 4 | 4 | 4 | 4 | 4 | 6 |
| 15 | 6002503002 | Base lateral apoyo mesa Pastelera, zincado 700x100 | | 1 | 1 | 1 | 1 | 1 | 1 | 1 | 1 |
| 16 | 6009992206 | Juego bisagra mesa fria apertura derecha tirador horizontal, | | 2 | 3 | 4 | 5 | 2 | 3 | 4 | 5 |
| 16 | 6009992204 | Juego bisagra mesa fria apertura derecha tirador vertical, | | 2 | 3 | 4 | 5 | 2 | 3 | 4 | 5 |
| 16 | 6009992205 | Juego bisagra mesa fria apertura izquierda tirador horizontal, | | 2 | 3 | 4 | 5 | 2 | 3 | 4 | 5 |
| 16 | 6009992203 | Juego bisagra mesa fria apertura izquierda tirador vertical, | | 2 | 3 | 4 | 5 | 2 | 3 | 4 | 5 |
| 17 | 6000202237 | Soporte rejilla cuadro de mandos, | | 2 | 3 | 4 | 5 | | | | |
| 20 | 6009990038 | Juego guias estante parrilla interior (central), Pastelería "L" 705 mm | | | | | | 10 | 15 | 20 | 25 |
| 20 | 6009990003 | Juego guias estante parrilla interior, Pastelería "L" 650 mm | | 10 | 15 | 20 | 25 | | | | |
| 23 | 6009990214 | Cremallera lateral trasera, mesa Snack / pastelería | | 2 | 2 | 2 | 2 | | | | |
| 24 | 6009990216 | Cremallera central trasera, mesa Snack / pastelería | | 1 | 2 | 3 | 4 | | | | |
| 25 | 6009990218 | Cremallera delantera, mesa fría Snack / Pastelería / GN 1/1 | | 4 | 6 | 8 | 10 | 8 | 12 | 16 | 20 |
| 27 | 6001401104 | Burlete puerta mesa Snack, 475x605 UR-260-M | | 2 | 3 | 4 | 5 | 2 | 3 | 4 | 5 |
| 29 | 6009990155 | Puerta refrigeración, tirador horizontal, apertura derecha, Snack / Pasteleria, 510x640 | | 2 | 3 | 4 | 5 | 2 | 3 | 4 | 5 |
| 29 | 6009990153 | Puerta refrigeración, tirador horizontal, apertura izquierda, Snack / Pasteleria, 510x640 | | 2 | 3 | 4 | 5 | 2 | 3 | 4 | 5 |
| 29 | 6009990154 | Puerta refrigeración, tirador vertical, apertura derecha, Snack / Pasteleria, 510x640 | | 2 | 3 | 4 | 5 | 2 | 3 | 4 | 5 |
| 29 | 6009990007 | Puerta refrigeración, tirador vertical, apertura izquierda, Snack / Pasteleria, 510x640 | | 2 | 3 | 4 | 5 | 4 | 6 | 8 | 10 |
| 33 | 6009991035 | Encimera inox. Pastelería central, pre-instalación, 1200x860 | | | | | | 1 | | | |
| 33 | 6009991037 | Encimera inox. Pastelería central, pre-instalación, 1725x860 | | | | | | | 1 | | |
| 33 | 6009991039 | Encimera inox. Pastelería central, pre-instalación, 2250x860 | | | | | | | | 1 | |
| 33 | 6009991041 | Encimera inox. Pastelería central, pre-instalación, 2775x860 | | | | | | | | | 1 |
| 33 | 6009991314 | Encimera inox. Pastelería especial pre-instalación, 1200x800 peto 100 mm | | 1 | | | | | | | |
| 33 | 6009991158 | Encimera inox. Pastelería especial pre-instalación, 1200x800 peto 45 mm | | 1 | | | | | | | |

FAGOR
FAGOFRI SA

**PLANO DESPIECE**

| | FAGOFRI Código | MATERIAL | MODELO | DSP-0144 MPP-117-R | DSP-0144 MPP-169-R | DSP-0144 MPP-222-R | DSP-0144 MPP-274-R | DSP-0144 MPP-117-R/C | DSP-0144 MPP-169-R/C | DSP-0144 MPP-222-R/C | DSP-0144 MPP-274-R/C |
|---|---|---|---|---|---|---|---|---|---|---|---|
| | | | | 1 | 1 | 1 | 1 | 1 | 1 | 1 | 1 |
| 33 | 6009991316 | Encimera inox. Pastelería especial pre-instalación, 1725x800 peto 100 mm | | | 1 | | | | | | |
| 33 | 6009991160 | Encimera inox. Pastelería especial pre-instalación, 1725x800 peto 45 mm | | | 1 | | | | | | |
| 33 | 6009991310 | Encimera inox. Pastelería especial pre-instalación, 2250x800 peto 100 mm | | | | 1 | | | | | |
| 33 | 6009991161 | Encimera inox. Pastelería especial pre-instalación, 2250x800 peto 45 mm | | | | 1 | | | | | |
| 33 | 6009991312 | Encimera inox. Pastelería especial pre-instalación, 2775x800 peto 100 mm | | | | | 1 | | | | |
| 33 | 6009991164 | Encimera inox. Pastelería especial pre-instalación, 2775x800 peto 45 mm | | | | | 1 | | | | |
| 33 | 6009991027 | Encimera inox. Pastelería, pre-instalación, 1200x800 | | 1 | | | | | | | |
| 33 | 6009991029 | Encimera inox. Pastelería, pre-instalación, 1725x800 | | | 1 | | | | | | |
| 33 | 6009991031 | Encimera inox. Pastelería, pre-instalación, 2250x800 | | | | 1 | | | | | |
| 33 | 6009991033 | Encimera inox. Pastelería, pre-instalación, 2775x800 | | | | | 1 | | | | |
| 35 | 6009991126 | Protector encimera, aluminio 1700x57 | | | 1 | | | | 1 | | |
| 35 | 6009991130 | Protector encimera, aluminio 1722+1124x57 | | | | | 1 | | | | 1 |
| 35 | 6009991121 | Protector encimera, aluminio 1722+1424x57 | | | | | 1 | | | | 1 |
| 35 | 6009991128 | Protector encimera, aluminio 1722+599x57 | | | | 1 | | | | 1 | |
| 35 | 6009991119 | Protector encimera, aluminio 1722+899x57 | | | | 1 | | | | 1 | |
| 35 | 6009991117 | Protector encimera, aluminio 2000x57 | | | 1 | | | | 1 | | |
| 36 | 6009991132 | Techo interior, aluminio 1000x670 | | 1 | | | | 1 | | | |
| 36 | 6009991135 | Techo interior, aluminio 1525x670 | | | 1 | | | | 1 | | |
| 36 | 6009991138 | Techo interior, aluminio 2050x670 | | | | 1 | | | | 1 | |
| 36 | 6009991141 | Techo interior, aluminio 2575x670 | | | | | 1 | | | | 1 |
| 37 | 6009991201 | Aislamiento techo interior, porexpan 1010x666x30 | | 1 | | | | 1 | | | |
| 37 | 6009991204 | Aislamiento techo interior, porexpan 1535x666x30 | | | 1 | | | | 1 | | |
| 37 | 6009991207 | Aislamiento techo interior, porexpan 2060x666x30 | | | | 1 | | | | 1 | |
| 37 | 6009991210 | Aislamiento techo interior, porexpan 2585x666x30 | | | | | 1 | | | | 1 |
| 39 | 6009990041 | Cuadro de mandos desmontable remoto comun Snack - Pasteleria - GN 1/1, pre-instalación | | 1 | 1 | 1 | 1 | 2 | 2 | 2 | 2 |
| 40 | 6009990053 | Lateral desmontable mesa pastelera remota, | | 1 | 1 | 1 | 1 | 1 | 1 | 1 | 1 |
| 41 | 6001801004 | Estante parrilla pastelera, Alambre plastificado 400x600 | | 2 | 3 | 4 | 5 | 2 | 3 | 4 | 5 |
| 42 | 6001507041 | Interruptor paro ventilador tiro forzado (MESAS FRIAS), Pulsador 1005172 NA/M14,2S4,BM | | 1 | 1 | 1 | 1 | 2 | 2 | 2 | 2 |
| 47 | 6001508001 | Resistencia marco puerta snack-1, 10 W x m, 2100+600 | | 1 | 1 | 1 | 1 | 2 | 2 | 2 | 2 |
| 47 | 6001508002 | Resistencia marco puerta snack-2, 10 W x m, 2100+200+600 | | 1 | 2 | 3 | 4 | 2 | 4 | 6 | 8 |
| 48 | 6002000057 | Sonda termostato, NTC 938 Ohm | | 1 | 1 | 1 | 1 | 1 | 1 | 1 | 1 |
| 134 | 6005510327 | Decorativo mesa fria Snack / Pastelera preinstalacion apertura derecha, inox satinado 1194x45 | | 1 | | | | 1 | | | |
| 134 | 6005510328 | Decorativo mesa fria Snack / Pastelera preinstalacion apertura derecha, inox satinado 1722x45 | | | 1 | | | | 1 | | |
| 134 | 6005510329 | Decorativo mesa fria Snack / Pastelera preinstalacion apertura derecha, inox satinado 2244x45 | | | | 1 | | | | 1 | |

FAGOR
FAGOFRI SA

**PLANO DESPIECE**

| | FAGOFRI Código | MATERIAL | DSP-0144 MPP-117-R | DSP-0144 MPP-169-R | DSP-0144 MPP-222-R | DSP-0144 MPP-274-R | DSP-0144 MPP-117-R/C | DSP-0144 MPP-169-R/C | DSP-0144 MPP-222-R/C | DSP-0144 MPP-274-R/C |
|---|---|---|---|---|---|---|---|---|---|---|
| **MODELO** | | | 1 | 1 | 1 | 1 | 1 | 1 | 1 | 1 |
| 134 | 6005510330 | Decorativo mesa fria Snack / Pastelera preinstalacion apertura derecha, inox satinado 2769x45 | | | | 1 | | | | 1 |
| 134 | 6005510480 | Decorativo mesa fria Snack / Pastelera preinstalacion apertura izquierda, inox satinado 1194x45 | 1 | | | | 1 | | | |
| 134 | 6005510481 | Decorativo mesa fria Snack / Pastelera preinstalacion apertura izquierda, inox satinado 1722x45 | | 1 | | | | 1 | | |
| 134 | 6005510482 | Decorativo mesa fria Snack / Pastelera preinstalacion apertura izquierda, inox satinado 2244x45 | | | 1 | | | | 1 | |
| 134 | 6005510483 | Decorativo mesa fria Snack / Pastelera preinstalacion apertura izquierda, inox satinado 2769x45 | | | | 1 | | | | 1 |

FAGOR
FAGOFRI SA

**PLANO DESPIECE**

| | FAGOFRI Código | MATERIAL | DSP-0144 MPN-117-R | DSP-0144 MPN-169-R | DSP-0144 MPN-222-R | DSP-0144 MPN-274-R | DSP-0144 MPN-117-R/C | DSP-0144 MPN-169-R/C | DSP-0144 MPN-222-R/C | DSP-0144 MPN-274-R/C |
|---|---|---|---|---|---|---|---|---|---|---|
| **MODELO** | | | 1 | 1 | 1 | 1 | 1 | 1 | 1 | 1 |
| 4 | 6001903001 | Evaporador, Bateria FC-61-B | 1 | | | | 1 | | | |
| 4 | 6001903003 | Evaporador, Bateria FC-71-B | | 1 | 1 | 1 | | 1 | 1 | 1 |
| 7 | 6001507044 | Control digital mant. congelados, Carel PJ32C00000 (220 v, 3 botones, 3 reles) | 1 | 1 | 1 | 1 | 1 | 1 | 1 | 1 |
| 7 | 6001507043 | Control digital mant. congelados, Carel PJ32SE (12 v, 4 botones, 4 reles) | 1 | 1 | 1 | 1 | 1 | 1 | 1 | 1 |
| 7 | 6001507012 | Control digital mant. congelados, ELIWELL EWPC 974 con sondas y tranformador | 1 | 1 | 1 | 1 | 1 | 1 | 1 | 1 |
| 7 | 6001507042 | Control digital mant. congelados, ELIWELL EWPX-174 con sondas y transformador | 1 | 1 | 1 | 1 | 1 | 1 | 1 | 1 |
| 8 | 6001507003 | Interruptor general on / off, BIPOLAR N/ABMAR 220 V. IB4-3106 | 1 | 1 | 1 | 1 | 1 | 1 | 1 | 1 |
| 9 | 6001507005 | Piloto funcionamiento compresor, L-312 Ø13 mm 220 V AMBAR | 1 | 1 | 1 | 1 | 1 | 1 | 1 | 1 |
| 12 | | Bandeja goteo evaporador FC-61-B mesa fría, Aluminio | 1 | | | | 1 | | | |
| 12 | 6004000017 | Bandeja goteo evaporador FC-71-B mesa fria, Aluminio | | 1 | 1 | 1 | | 1 | 1 | 1 |
| 14 | 6009990360 | Conjunto pata regulable Mesa Fria, Estanteria y Mesa Cafetera, ø50x107 / 147 | 4 | 4 | 4 | 4 | 4 | 4 | 4 | 6 |
| 15 | 6002503002 | Base lateral apoyo mesa Pastelera, zincado 700x100 | 1 | 1 | 1 | 1 | 1 | 1 | 1 | 1 |
| 16 | 6009992206 | Juego bisagra mesa fria apertura derecha tirador horizontal, | 2 | 3 | 4 | 5 | 2 | 3 | 4 | 5 |
| 16 | 6009992204 | Juego bisagra mesa fria apertura derecha tirador vertical, | 2 | 3 | 4 | 5 | 2 | 3 | 4 | 5 |
| 16 | 6009992205 | Juego bisagra mesa fria apertura izquierda tirador horizontal, | 2 | 3 | 4 | 5 | 2 | 3 | 4 | 5 |
| 16 | 6009992203 | Juego bisagra mesa fria apertura izquierda tirador vertical, | 2 | 3 | 4 | 5 | 2 | 3 | 4 | 5 |
| 17 | 6000202237 | Soporte rejilla cuadro de mandos, | 2 | 3 | 4 | 5 | 2 | 3 | 4 | 5 |
| 20 | 6009990038 | Juego guias estante parrilla interior (central), Pasteleria "L" 705 mm | | | | | 10 | 15 | 20 | 25 |
| 20 | 6009990003 | Juego guias estante parrilla interior, Pasteleria "L" 650 mm | 10 | 15 | 20 | 25 | | | | |
| 23 | 6009990214 | Cremallera lateral trasera, mesa Snack / pasteleria | 2 | 2 | 2 | 2 | | | | |
| 24 | 6009990216 | Cremallera central trasera, mesa Snack / pasteleria | 1 | 2 | 3 | 4 | | | | |
| 25 | 6009990218 | Cremallera delantera, mesa fria Snack / Pasteleria / GN 1/1 | 4 | 6 | 8 | 10 | 8 | 12 | 16 | 20 |
| 27 | 6001401104 | Burlete puerta mesa Snack, 475x605 UR-260-M | 2 | 3 | 4 | 5 | 2 | 3 | 4 | 5 |
| 29 | 6009990175 | Puerta mant cong tirador horizontal, apertura derecha, Snack / Pasteleria, 510x640 | 2 | 3 | 4 | 5 | 2 | 3 | 4 | 5 |
| 29 | 6009990173 | Puerta mant cong tirador horizontal, apertura izquierda, Snack / Pasteleria, 510x640 | 2 | 3 | 4 | 5 | 2 | 3 | 4 | 5 |
| 29 | 6009990174 | Puerta mant cong tirador vertical, apertura derecha, Snack / Pasteleria, 510x640 | 2 | 3 | 4 | 5 | 2 | 3 | 4 | 5 |
| 29 | 6009990013 | Puerta mant cong tirador vertical, apertura izquierda, Snack / Pasteleria, 510x640 | 2 | 3 | 4 | 5 | 2 | 3 | 4 | 5 |
| 33 | 6009991035 | Encimera inox. Pastelería central, pre-instalación, 1200x860 | | | | | 1 | | | |
| 33 | 6009991037 | Encimera inox. Pastelería central, pre-instalación, 1725x860 | | | | | | 1 | | |
| 33 | 6009991039 | Encimera inox. Pastelería central, pre-instalación, 2250x860 | | | | | | | 1 | |
| 33 | 6009991041 | Encimera inox. Pastelería central, pre-instalación, 2775x860 | | | | | | | | 1 |
| 33 | 6009991314 | Encimera inox. Pastelería especial pre-instalación, 1200x800 peto 100 mm | 1 | | | | | | | |
| 33 | 6009991158 | Encimera inox. Pastelería especial pre-instalación, 1200x800 peto 45 mm | 1 | | | | | | | |
| 33 | 6009991316 | Encimera inox. Pastelería especial pre-instalación, 1725x800 peto 100 mm | | 1 | | | | | | |

FAGOR
FAGOFRI SA

**PLANO DESPIECE**

| | FAGOFRI Código | MATERIAL | MODELO | DSP-0144 MPN-117-R | DSP-0144 MPN-169-R | DSP-0144 MPN-222-R | DSP-0144 MPN-274-R | DSP-0144 MPN-117-R/C | DSP-0144 MPN-169-R/C | DSP-0144 MPN-222-R/C | DSP-0144 MPN-274-R/C |
|---|---|---|---|---|---|---|---|---|---|---|---|
| | | | | 1 | 1 | 1 | 1 | 1 | 1 | 1 | 1 |
| 33 | 6009991160 | Encimera inox. Pastelería especial pre-instalación, 1725x800 peto 45 mm | | | 1 | | | | | | |
| 33 | 6009991310 | Encimera inox. Pastelería especial pre-instalación, 2250x800 peto 100 mm | | | | 1 | | | | | |
| 33 | 6009991161 | Encimera inox. Pastelería especial pre-instalación, 2250x800 peto 45 mm | | | | 1 | | | | | |
| 33 | 6009991312 | Encimera inox. Pastelería especial pre-instalación, 2775x800 peto 100 mm | | | | | 1 | | | | |
| 33 | 6009991164 | Encimera inox. Pastelería especial pre-instalación, 2775x800 peto 45 mm | | | | | 1 | | | | |
| 33 | 6009991027 | Encimera inox. Pastelería, pre-instalación, 1200x800 | | 1 | | | | | | | |
| 33 | 6009991029 | Encimera inox. Pastelería, pre-instalación, 1725x800 | | | 1 | | | | | | |
| 33 | 6009991031 | Encimera inox. Pastelería, pre-instalación, 2250x800 | | | | 1 | | | | | |
| 33 | 6009991033 | Encimera inox. Pastelería, pre-instalación, 2775x800 | | | | | 1 | | | | |
| 35 | 6009991124 | Protector encimera, aluminio 1191x57 | | 1 | | | | 1 | | | |
| 35 | 6009991115 | Protector encimera, aluminio 1491x57 | | 1 | | | | 1 | | | |
| 35 | 6009991126 | Protector encimera, aluminio 1700x57 | | | 1 | | | | 1 | | |
| 35 | 6009991130 | Protector encimera, aluminio 1722+1124x57 | | | | | 1 | | | | 1 |
| 35 | 6009991121 | Protector encimera, aluminio 1722+1424x57 | | | | | 1 | | | | 1 |
| 35 | 6009991128 | Protector encimera, aluminio 1722+599x57 | | | | 1 | | | | 1 | |
| 35 | 6009991119 | Protector encimera, aluminio 1722+899x57 | | | | 1 | | | | 1 | |
| 35 | 6009991117 | Protector encimera, aluminio 2000x57 | | | 1 | | | | 1 | | |
| 36 | 6009991132 | Techo interior, aluminio 1000x670 | | 1 | | | | 1 | | | |
| 36 | 6009991135 | Techo interior, aluminio 1525x670 | | | 1 | | | | 1 | | |
| 36 | 6009991138 | Techo interior, aluminio 2050x670 | | | | 1 | | | | 1 | |
| 36 | 6009991141 | Techo interior, aluminio 2575x670 | | | | | 1 | | | | 1 |
| 37 | 6009991201 | Aislamiento techo interior, porexpan 1010x666x30 | | 1 | | | | 1 | | | |
| 37 | 6009991204 | Aislamiento techo interior, porexpan 1535x666x30 | | | 1 | | | | 1 | | |
| 37 | 6009991207 | Aislamiento techo interior, porexpan 2060x666x30 | | | | 1 | | | | 1 | |
| 37 | 6009991210 | Aislamiento techo interior, porexpan 2585x666x30 | | | | | 1 | | | | 1 |
| 39 | 6009990041 | Cuadro de mandos desmontable remoto comun Snack - Pasteleria - GN 1/1, pre-instalación | | 1 | 1 | 1 | 1 | 2 | 2 | 2 | 2 |
| 40 | 6009990053 | Lateral desmontable mesa pastelera remota, | | 1 | 1 | 1 | 1 | 1 | 1 | 1 | 1 |
| 41 | 6001801004 | Estante parrilla pastelera, Alambre plastificado 400x600 | | 2 | 3 | 4 | 5 | 2 | 3 | 4 | 5 |
| 42 | 6001507041 | Interruptor paro ventilador tiro forzado (MESAS FRIAS), Pulsador 1005172 NA/M14,2S4,BM | | 1 | 1 | 1 | | 2 | 2 | 2 | 2 |
| 47 | 6001508001 | Resistencia marco puerta snack-1, 10 W x m, 2100+600 | | 1 | 1 | 1 | 1 | 2 | 2 | 2 | 2 |
| 47 | 6001508002 | Resistencia marco puerta snack-2, 10 W x m, 2100+200+600 | | 1 | 2 | 3 | 4 | 2 | 4 | 6 | 8 |
| 48 | 6002000057 | Sonda termostato, NTC 938 Ohm | | 2 | 2 | 2 | 2 | 2 | 2 | 2 | 2 |
| 117 | 6001508011 | Resistencia bandeja goteo evaporador, 18 w | | 1 | 1 | 1 | 1 | 1 | 1 | 1 | 1 |
| 117 | 6001508021 | Resistencia descarche evaporador 61 - 71, 350 w cable corto | | 1 | 1 | 1 | 1 | 1 | 1 | 1 | 1 |

FAGOR
FAGOFRI SA

**PLANO DESPIECE**

| | FAGOFRI Código | MATERIAL | DSP-0144 MPN-117-R | DSP-0144 MPN-169-R | DSP-0144 MPN-222-R | DSP-0144 MPN-274-R | DSP-0144 MPN-117-R/C | DSP-0144 MPN-169-R/C | DSP-0144 MPN-222-R/C | DSP-0144 MPN-274-R/C |
|---|---|---|---|---|---|---|---|---|---|---|
| | | **MODELO** | 1 | 1 | 1 | 1 | 1 | 1 | 1 | 1 |
| 134 | 6005510327 | Decorativo mesa fria Snack / Pastelera preinstalacion apertura derecha, inox satinado 1194x45 | 1 | | | | 1 | | | |
| 134 | 6005510328 | Decorativo mesa fria Snack / Pastelera preinstalacion apertura derecha, inox satinado 1722x45 | | 1 | | | | 1 | | |
| 134 | 6005510329 | Decorativo mesa fria Snack / Pastelera preinstalacion apertura derecha, inox satinado 2244x45 | | | 1 | | | | 1 | |
| 134 | 6005510330 | Decorativo mesa fria Snack / Pastelera preinstalacion apertura derecha, inox satinado 2769x45 | | | | 1 | | | | 1 |
| 134 | 6005510480 | Decorativo mesa fria Snack / Pastelera preinstalacion apertura izquierda, inox satinado 1194x45 | 1 | | | | 1 | | | |
| 134 | 6005510481 | Decorativo mesa fria Snack / Pastelera preinstalacion apertura izquierda, inox satinado 1722x45 | | 1 | | | | 1 | | |
| 134 | 6005510482 | Decorativo mesa fria Snack / Pastelera preinstalacion apertura izquierda, inox satinado 2244x45 | | | 1 | | | | 1 | |
| 134 | 6005510483 | Decorativo mesa fria Snack / Pastelera preinstalacion apertura izquierda, inox satinado 2769x45 | | | | 1 | | | | 1 |