KROMO	TABLE KI5110	REV 00

BLENDER KF1

From serial number 99023904

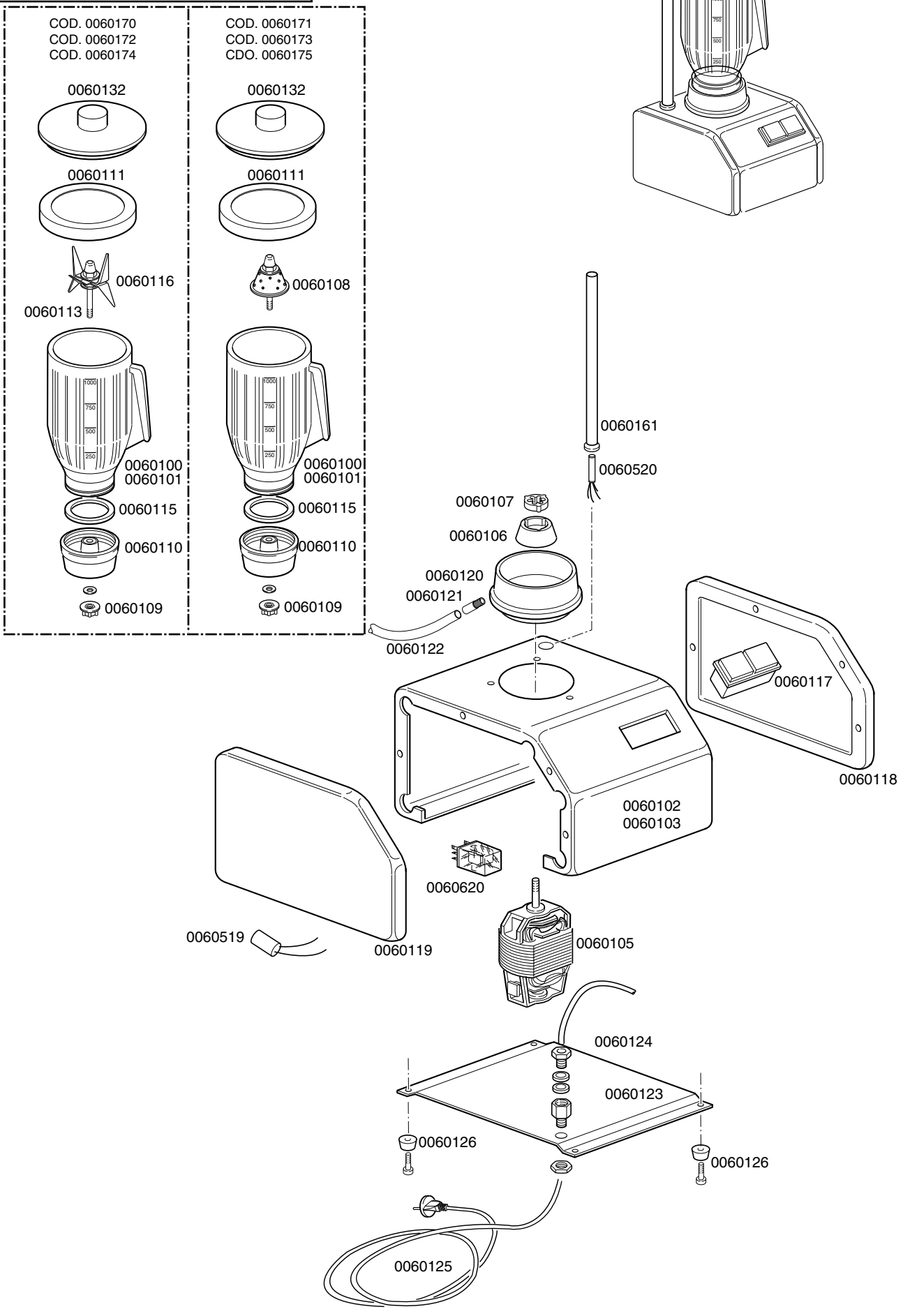

BLENDER KF 1

TABLE KI5110

CODE	DESCRIPTION	CODE	DESCRIPTION
0060100	Glass 1 liter		
0060102	Single cover		
0060103	Double cover		
0060105	R93 2V engine		
0060106	Gear support		
0060107	Female gar		
0060108	Mixer cone		
0060109	Male gear		
0060110	Glass base		
0060111	Glass cover		
0060113	Male gear insert		
0060115	Glass gasket		
0060116	Knife assembly		
0060117	Double switch		
0060118	Right panel		
0060119	Left panel		
0060120	Aluminium cylindrical support		
0060121	Drain small pipe fitting		
0060122	Drain small pipe		
0060123	End-panel		
0060124	Cable pass		
0060125	Power supply cable		
0060126	Rubber small foot		
0060161	Reed holder pipe		
0060170	Complete glass 1 liter with blade		
0060171	Complete glass 1 liter with cone		
0060172	Complete glass 3 liter with blade		
0060173	Complete glass 3 liter with cone		
0060519	Radio interference filter		
0060520	Safety reed		
0060620	10A bipolar relay		