SAGI - BASE REFRIGERATA TN lt.520, 5 CASSETTI+1 PORTINA
KWRB4A - 15-07-2002 » 12-12-2005

/A=PIANO CON ALZATINA
/A=SHELF+ RIDGE
/A=PLATTE MIT RUECKLEISTE
/A=RAYON AVEC ETAGERE
/A=TOPE CON ELEV.

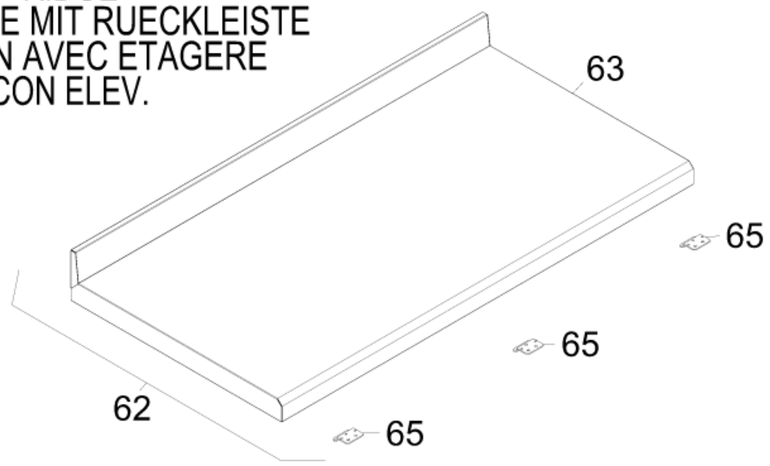


/M=PIANO SENZA ALZATINA
/M=SHELF WITHOUT RIDGE
/M=PLATTE OHNE RUECKLEISTE
/M=RAYON SANS ETAGERE
/M=TOPE SIN ELEV

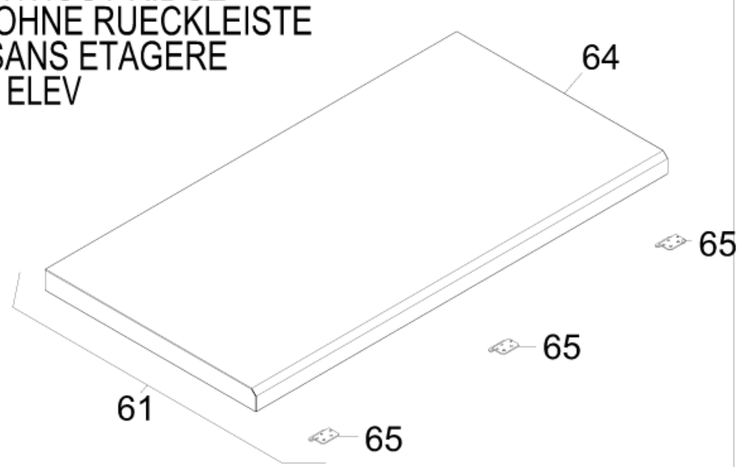


SOLO PER PORTE
DOORS ONLY
NEUR FUER TUERN
SEULEMENTO POUR PUERTAS
SOLO PORTES

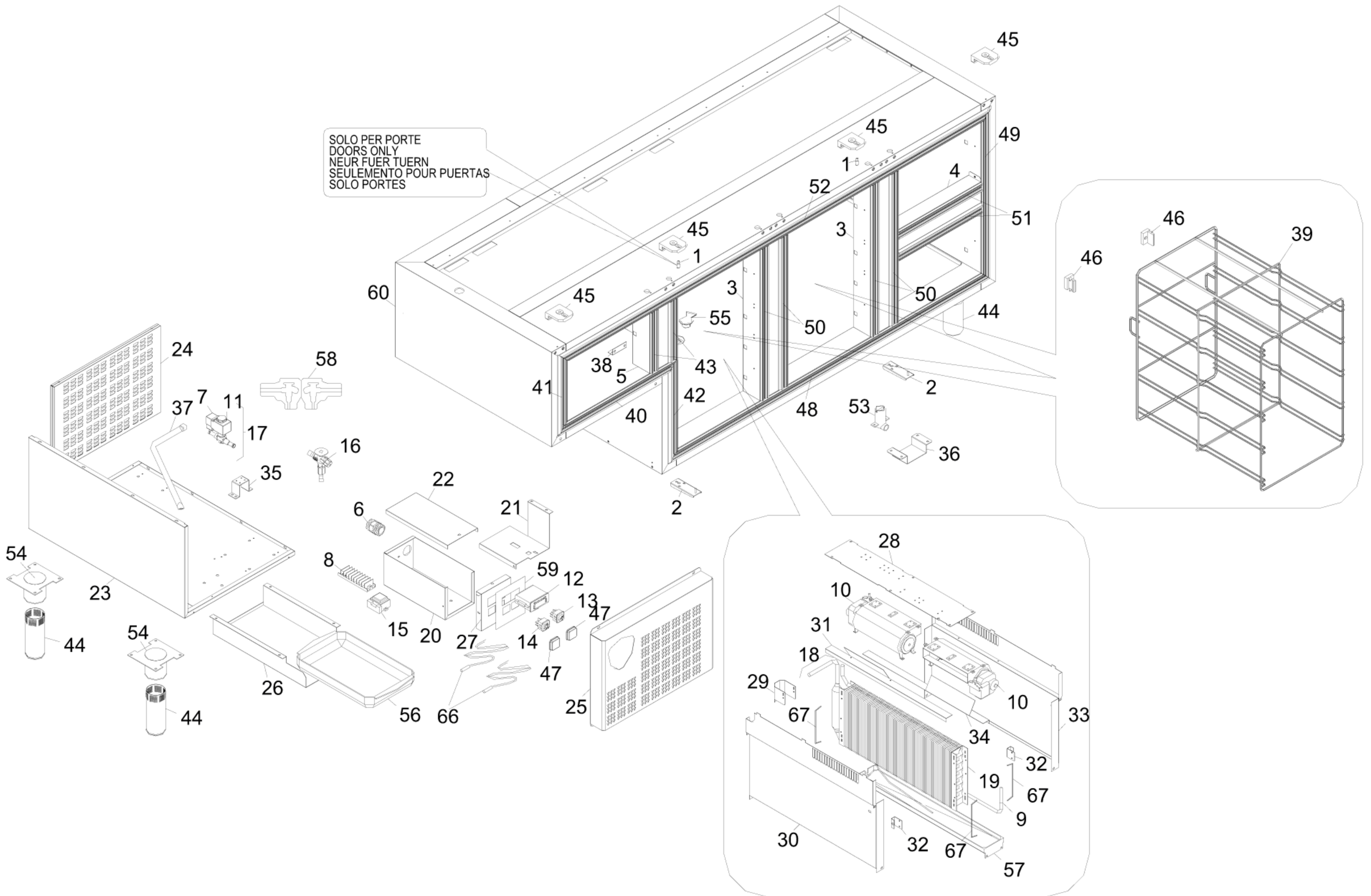

## Modello Typ Model Modele Modelo

| | | KTRA<br>KTRAA<br>KTRAM<br>KWRA<br>KWRAA<br>KWRAM | KTRA2<br>KTRA2A<br>KTRA2M<br>KWRA2<br>KWRA2A<br>KWRA2M | KTRA4<br>KTRA4A<br>KTRA4M<br>KWRA4<br>KWRA4A<br>KWRA4M | KTRB<br>KTRBA<br>KTRBM<br>KWRB<br>KWRBA<br>KWRBM | KTRB2<br>KTRB2A<br>KTRB2M<br>KWRB2<br>KWRB2A<br>KWRB2M | KTRB4<br>KTRB4A<br>KTRB4M<br>KWRB4<br>KWRB4A<br>KWRB4M | KTRB6<br>KTRB6A<br>KTRB6M<br>KWRB6<br>KWRB6A<br>KWRB6M | KTRB11<br>KTRB11A<br>KTRB11M<br>KWRB11<br>KWRB11A<br>KWRB11M | KTRC<br>KTRCA<br>KTRCM<br>KWRC<br>KWRCA<br>KWRCM | KTRC2<br>KTRC2A<br>KTRC2M<br>KWRC2<br>KWRC2A<br>KWRC2M | KTRC4<br>KTRC4A<br>KTRC4M<br>KWRC4<br>KWRC4A<br>KWRC4M | KTRC6<br>KTRC6A<br>KTRC6M<br>KWRC6<br>KWRC6A<br>KWRC6M | KTRC11<br>KTRC11A<br>KTRC11M<br>KWRC11<br>KWRC11A<br>KWRC11M |
|---|---|---|---|---|---|---|---|---|---|---|---|---|---|---|
| Num. cassetti | 1/2KS | 1 | 1 | 1 | 1 | 1 | 1 | 1 | 1 | 1 | 1 | 1 | 1 | 1 |
| Schublad | 1/2K | - | 1 | 2 | - | 1 | 2 | 3 | - | - | 1 | 2 | 3 | - |
| Drawers | 1/2 | - | 1 | 2 | - | 1 | 2 | 3 | - | - | 1 | 2 | 3 | - |
| Tiroirs | 1/3 | - | - | - | - | - | - | - | 1 | - | - | - | - | 1 |
| Gabetas | 2/3 | - | - | - | - | - | - | - | 1 | - | - | - | - | 1 |
| Porte<br>Türen<br>Doors<br>Portes | DX | 1 | - | - | 1 | - | - | - | - | 1 | - | - | - | - |
| Puertas | SX | 1 | 1 | - | 2 | 2 | 1 | - | 2 | 3 | 3 | 2 | 1 | 3 |

