DESPIECE TECNICO / SPARE PARTS BOM

Hornos eléctricos
Fours électriques
Electric ovens
Elecktro heissluftdämpfer
Forni elettrici
Fornos eletricos

Modelos / Models:

AE-061
ACE-061
APE-061
AE-101
ACE-101
APE-101

Septiembre 2012 September
Revisado Abril 2016 April Revised

FAGOR

FAGOR INDUSTRIAL

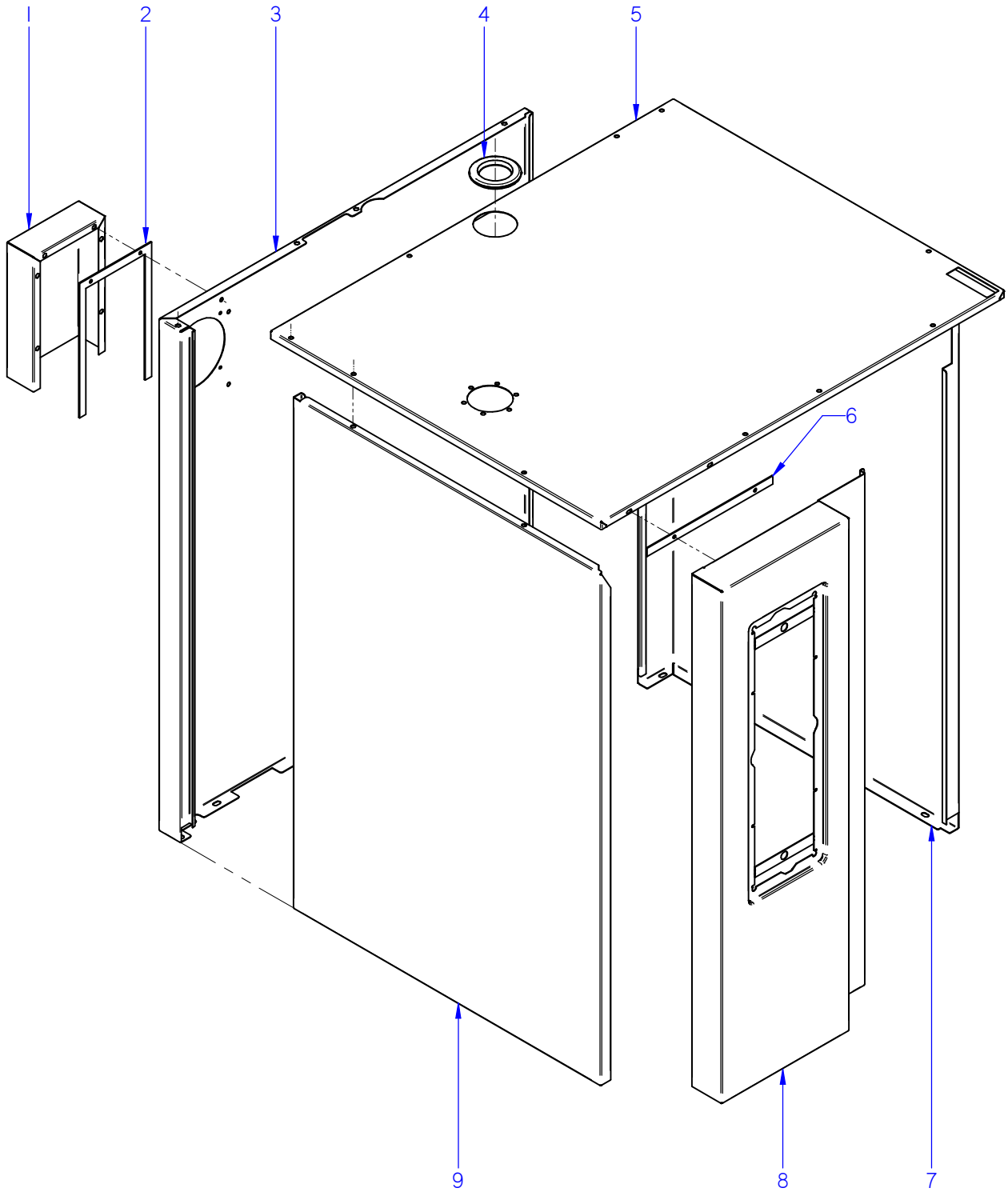

ITEM MARCADO EN COLOR = REPUESTO RECOMENDADO
COLOURED ITEM = RECOMMENDED SPARE PART

Nº plano / N º plane	Firma	Fecha / Date	Denominación / Denomination: MUEBLE / UNIT	Lamina / Sheet	
C-3000		2012-09	HORNOS AE; ACE; APE-061 / 101	1	Fagor Industrial S.Coop. FAGOR Oñate

APARATO / APPLIANCE	HORNOS / OVENS	ZONA / ZONE	MUEBLE / UNIT	PLANO DRAWING	C-3000

ITEM	CODIGO REFERENCE	DENOMINACION	DENOMINATION	ACE-061	AE-061	APE-061	ACE-101	AE-101	APE-101			ELIMINADO ELIMINATED	INTRODUCID. INTRODUCED	NOTAS
1	12022537	CHAPA SEPARACION IPX5	SEPARATION PLATE IPX5	1	1	1	1	1	1					
2	12024082	JUNTA IPX5	SEAL IPX5	1	1	1	1	1	1					
3	12039596	PANEL POSTER EXTER 061	REAR EXTERIOR PANEL061	1	1	1	_	_	_					
3	12039494	PANEL POSTER EXTER 101	REAR EXTERIOR PANEL101	_	_	_	1	1	1					
4	12024231	PASAMUROS CHIMENEA 101003361	FEED THROUGH FLUE PIPE 10100336	1	1	1	1	1	1					
5	12043723	PANEL SUPER. EXTERIOR APE 061	SUP. EXTERIOR PANEL APE 061	1	1	1	1	1	1					
6	12039495	JUNTA PORTAMANDOS 101-102	CONTROL PANEL SEAL 101-102	1	1	1	1	1	1					
7	12043484	PANEL DERECHO ADV ELEC 061	RIGHT PANEL ADV ELEC 061	1	1	1	_	_	_					
7	12043609	PANEL DERECHO ADV ELEC 101	RIGHT PANEL ADV ELEC 101	_	_	_	1	1	1					
8	12039625	PORTAMANDOS APE 061	CONTROL PANEL APE 061	1	1	1	_	_	_					
8	12043767	PORTAMANDOS APE-APG 101	CONTROL PANEL APE-APG 101	_	_	_	1	1	1					
9	12043530	PANEL EXTER. IZDO. ADV ELEC.061	REAR LEFT PANEL ADV ELE.061	1	1	1	_	_	_					
9	12043702	PANEL EXTER. IZDO. ADV ELEC.101	REAR LEFT PANEL ADV ELE.101	_	_	_	1	1	1					

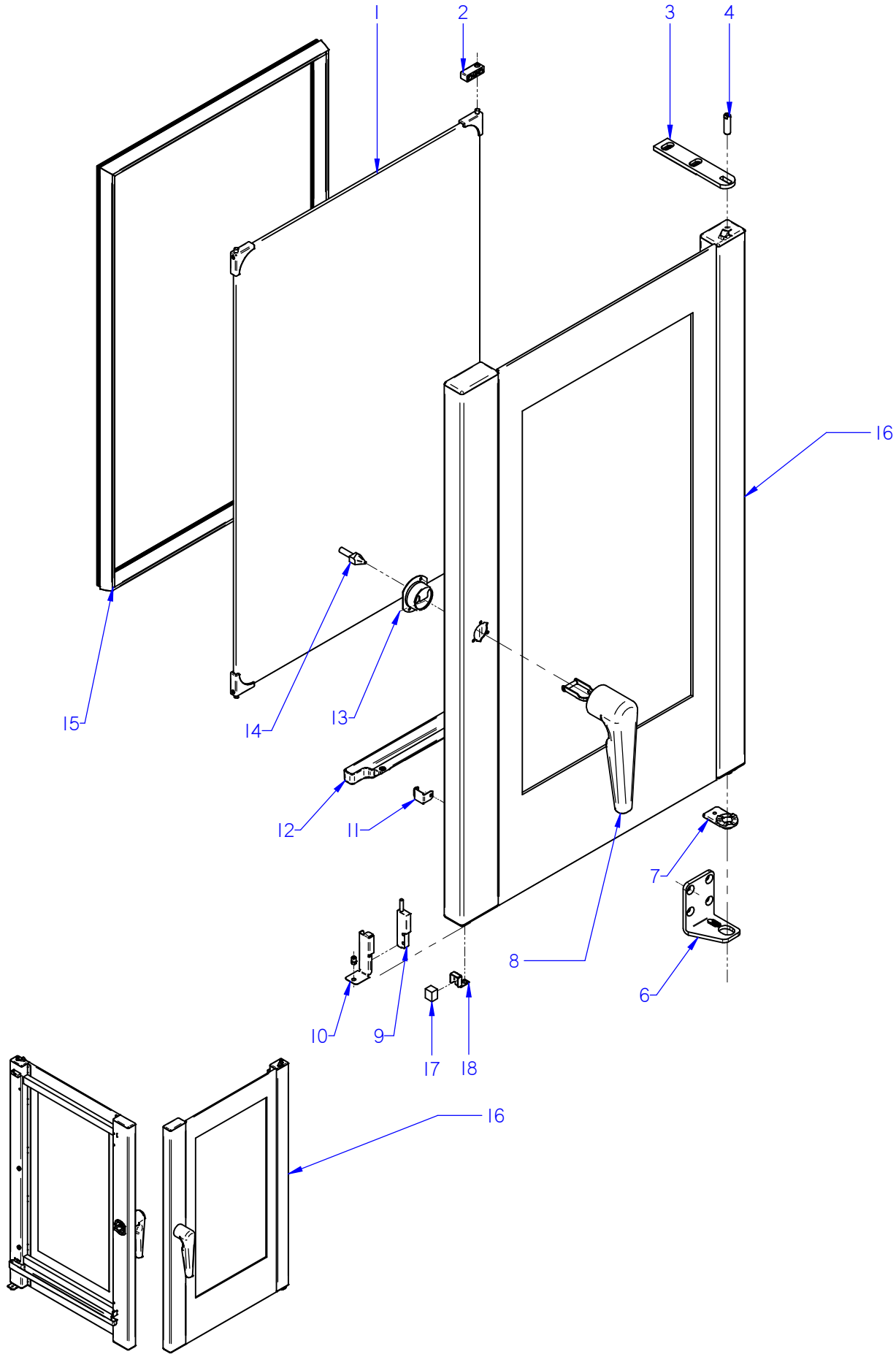

ITEM MARCADO EN COLOR = REPUESTO RECOMENDADO
COLOURED ITEM = RECOMMENDED SPARE PART

Nº plano / N º plane	Firma / Signature	Fecha / Date	Denominación / Denomination: PUERTA / DOOR	Lamina / Sheet	
C-3001	Iban R.	03-2015	HORNOS AE; ACE; APE-061 / 101	2	Fagor Industrial S.Coop. FAGOR Oñate

APARATO / APPLIANCE	HORNOS / OVENS	ZONA / ZONE	PUERTA / DOOR	PLANO DRAWING	C-3001

ITEM	CODIGO REFERENCE	DENOMINACION	DENOMINATION	ACE-061	AE-061	APE-061	ACE-101	AE-101	APE-101		RECOMEND.	ELIMINADO ELIMINATED	INTRODUCID. INTRODUCED	NOTAS
1	**12046041**	**KIT CRISTAL INTER. 061**	**061 INNER GLASS KIT**	**1**	**1**	**1**	_	_	_		X			
1	**12046042**	**KIT CRISTAL INTER. 101**	**101 INNER GLASS KIT**	_	_	_	**1**	**1**	**1**		X			
2	12041724	BISAGRA CRISTAL INTERIOR	INNER GLASS HINGE	2	2	2	2	2	2					
3	12039312	BISAGRA SUPERIOR	UPPER HINGE	1	1	1	1	1	1		X			
4	12023636	EJE SUPERIOR	UPPER SHAFT	1	1	1	1	1	1					
6	12043391	BISAGRA INFERIOR ADVANCE	BOTTOM HINGE ADVANCE	1	1	1	1	1	1					
7	12039311	BASE BISAGRA INFERIOR PUERTA	LOWER DOOR HINGE BASE	1	1	1	1	1	1			02.09.13		
7	12047967	BASE BISAGRA INFERIOR 6 DIEN	LOWER HINGE BASE	1	1	1	1	1	1		X		02.09.13	
8	12047580	REP. MANILLA 1/1 ADVANCE	HANDLE 1/1 ADVANCE	1	1	1	1	1	1		X			
9	12024560	INTERRUPTOR MAGNETICO AC	MAGNETIC SWITCH AC	1	1	1	1	1	1		X			
10	12022166	SOPORTE MICRO PUERTA	DOOR MICRO SWITCH	1	1	1	1	1	1					
11	12041725	MUELLE CIERRE CRISTAL INTERIOR	INNER GLASS SPRING LOCK	1	1	1	1	1	1					
12	12039485	RECOGEAGUAS PUERTA 101	DOOR SPRING WATER COLLECTOR 6	1	1	1	1	1	1					
13	12023553	EMBELLECEDOR POSTERI. ASA	REAR TRIM HANDLE	1	1	1	1	1	1			03.03.14		
13	12091814	EMBELLECEDOR PUERTA ADV-UL	DOOR TRIM ADV-UL	1	1	1	1	1	1				03.03.14	
14	12023849	ANCLAJE PUERTA	DOOR ANCHORING	1	1	1	1	1	1		X			
15	12039599	JUNTA PUERTA COMPL. 061	DOOR JOINT 061	1	1	1	_	_	_		X			
15	12039475	JUNTA PUERTA COMPL. 101	DOOR JOINT 101	_	_	_	1	1	1		X			
16	**12046015**	**KIT PUERTA 061**	**DOOR 061 KIT**	**1**	**1**	**1**	_	_	_		X			
16	**12046018**	**KIT PUERTA 101**	**DOOR 101 KIT**	_	_	_	**1**	**1**	**1**		X			
17	12024303	IMAN	MAGNET	1	1	1	1	1	1					
18	12049358	SOPORTE IMAN	MAGNET SUPPORT	1	1	1	1	1	1					

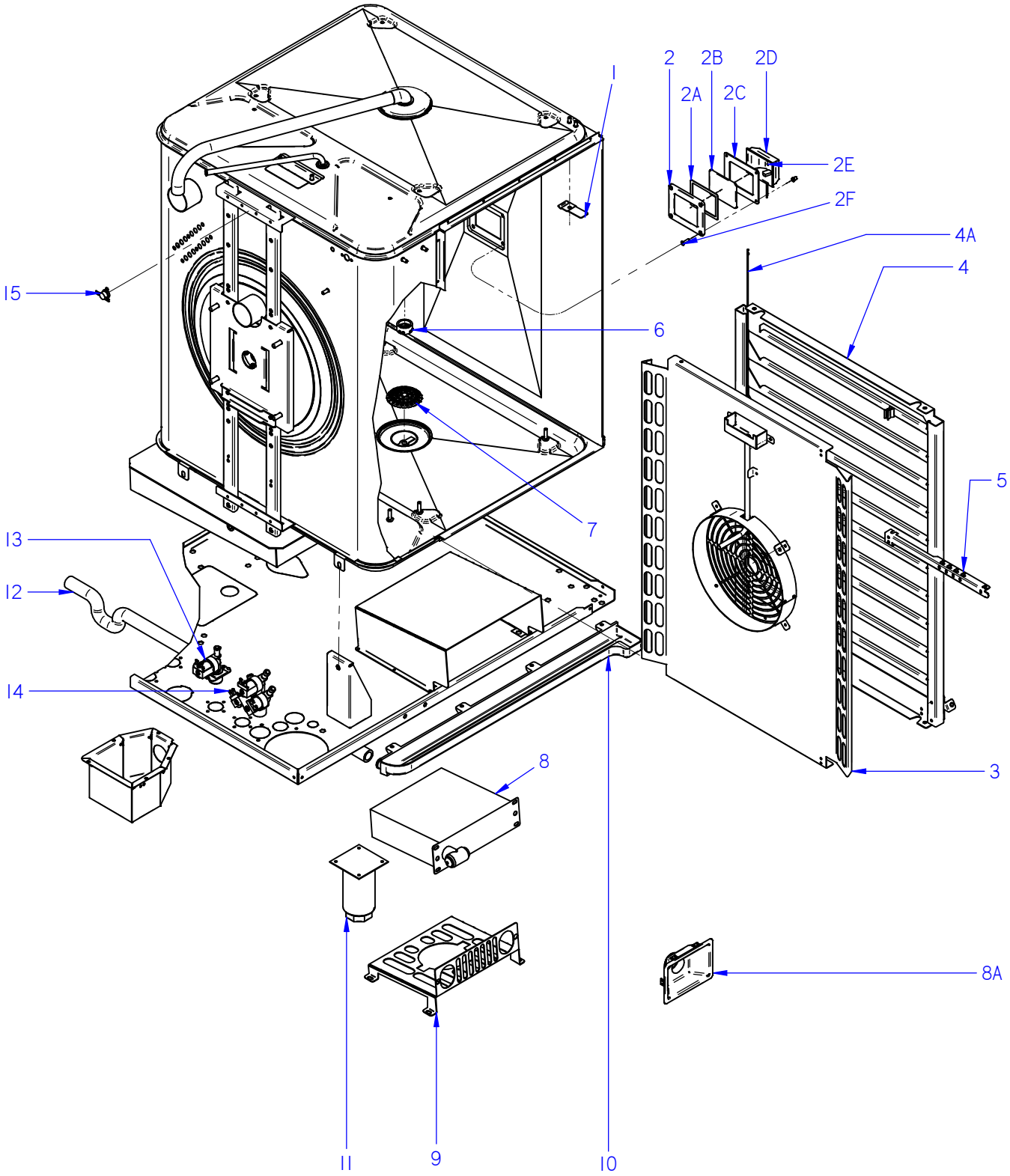

ITEM MARCADO EN COLOR = REPUESTO RECOMENDADO
COLOURED ITEM = RECOMMENDED SPARE PART

Nº plano / N º plane	Firma / Signature	Fecha / Date	Denominación / Denomination: MUEBLE INTERIOR / INTERIOR OVEN	Lamina / Sheet	
C-3002	Iban R.	01-2016	HORNOS AE; ACE; APE-061 / 101	3	Fagor Industrial S.Coop. FAGOR Oñate

APARATO / APPLIANCE	HORNOS / OVENS	ZONA / ZONE	MUEBLE INTERIOR / INTERIOR OVEN	PLANO DRAWING	C-3002

ITEM	CODIGO REFERENCE	DENOMINACION	DENOMINATION	ACE-061	AE-061	APE-061	ACE-101	AE-101	APE-101		RECOMEND.	ELIMINADO ELIMINATED	INTRODUCID. INTRODUCED	NOTAS
1	12041767	SOPORTE SONDA PINCHO CAMARA	CAMERA PROBE SUPP. PINCHO	2	2	2	2	2	2			15.02.13		
2	12024464	MARCO LAMPARA	LAMP ANCHORING PLATEN	1	1	1	1	1	1					
2A	12023532	JUNTA INTERIOR LAMPARA	LAMP INNER JOINT	1	1	1	1	1	1					
2B	12023668	CRISTAL LAMPARA	LAMP GLASS	1	1	1	1	1	1					
2C	12023578	JUNTA EXTERIOR LAMPARA	LAMP OUTER JOINT	1	1	1	1	1	1					
2D	12024545	PORTALAMPARAS	LAMP HOLDER	1	1	1	1	1	1					
2E	12025123	LAMPARA 10W-12V	LIGHT 10W 12V	1	1	1	1	1	1					
2F	12010262	TORNILLO M4X15MM DIN965	M4X15MM DIN965 SCREW	4	4	4	4	4	4					
3	**12126840**	**CUBREVENTILADOR ACE-061**	**FAN COVER ACE-061**	1	_	_	_	_	_					
3	**12126841**	**CUBREVENTILADOR AE-APE-061**	**FAN COVER AE-APE-061**	_	1	1	_	_	_					
3	**12126831**	**CUBREVENTILADOR ACE-101**	**FAN COVER ACE-101**	_	_	_	**1**	_	_					
3	**12126832**	**CUBREVENTILADOR AE-APE-101**	**FAN COVER AE-APE-101**	_	_	_	_	**1**	**1**					
4	**12119263**	**KIT PORTABANDEJAS DCHA. 061**	**RIGHT HOLDER TRAYS ADV 061**	**1**	**1**	**1**	_	_	_					
4	**12119260**	**KIT PORTABANDEJAS IZDA 061**	**LEFT HOLDER TRAYS ADV 061**	**1**	**1**	**1**	_	_	_					
4A	12039594	TOPE BANDEJAS 061	TRAY TOP 061	2	2	2	_	_	_					
4	**12118378**	**KIT PORTABANDEJAS DCHA. 101**	**RIGHT HOLDER TRAYS ADV 101**	_	_	_	**1**	**1**	**1**					
4	**12118377**	**KIT PORTABANDEJAS IZDA 101**	**LEFT HOLDER TRAYS ADV 101**	_	_	_	**1**	**1**	**1**					
4A	12039490	TOPE BANDEJAS 101-102	TRAY TOP101-102	_	_	_	2	2	2					
5	**12126827**	**SOPORTE CORE HOLDER**	**CORE HOLDER SUPPORT**	1	1	1	**1**	**1**	**1**					
6	12023935	PUNTA DIFUSORA LAVADO	WASHING DISPENSER POINT	_	_	1	_	_	1					
6	12129275	PUNTA DIFUSORA ACLARADO	RINSING DISPENSER POINT	1	1	_	1	1	_				01,01,16	
7	12002681	FILTRO DESAGÜE	DRAINAGE FILTER	1	1	1	1	1	1			15.09.13		
7	12095042	FILTRO DESAGÜE Ø53	DRAINAGE FILTER Ø53	1	1	1	1	1	1				15.09.13	
8	12040977	DUCHA	SHOWER	_	1	1	_	1	1					
8A	12041736	EMBELLECEDOR DUCHA ADV.	SHOWER TRIM ADVANCE	_	1	1	_	1	1					
9	12039620	CHAPA AMARRE DUCHA	TIE PLATE SHOWER	_	1	1	_	1	1					
10	12039627	RECOGEAGUAS HORNO	SPRING WATER COLLE.	1	1	1	1	1	1					
11	12009104	PATA REGULABLE	REGULABLE LEG	4	4	4	4	4	4					
12	12039498	TUBO RECOGEAGUAS 101	COLLECT WATER PIPE 101	1	1	1	1	1	1					
	12009628	ABRAZADERA ELAST. 26.7-28.1	SPRING CLAMP 26.7-28.1	2	2	2	2	2	2					

APARATO / APPLIANCE	HORNOS / OVENS	ZONA / ZONE	MUEBLE INTERIOR / INTERIOR OVEN	PLANO DRAWING	C-3002

ITEM	CODIGO REFERENCE	DENOMINACION	DENOMINATION	ACE-061	AE-061	APE-061	ACE-101	AE-101	APE-101		RECOMEND.	ELIMINADO ELIMINATED	INTRODUCID. INTRODUCED	NOTAS
13	12025161	E.V. 230VAC 50/60Hz 1V	SOLENOID VALVE 230VAC 1 W	1	_	1	1	_	1		X			
14	12023794	E.V. 230VAC 50/60Hz 2V	SOLENOID VALVE 230VAC 2 W	1	1	_	1	1	_		X		01,01,16	
14	12115418	E.V. 230VAC 50/60Hz 3V	SOLENOID VALVE 230VAC 3 W	_	1	1	_	1	1		X			
15	12095019	TERMOSTATO_261_NA_51ºC	THERMOSTAT_261_NA_51ºC	1	1	_	1	1	_		X		01,01,16	

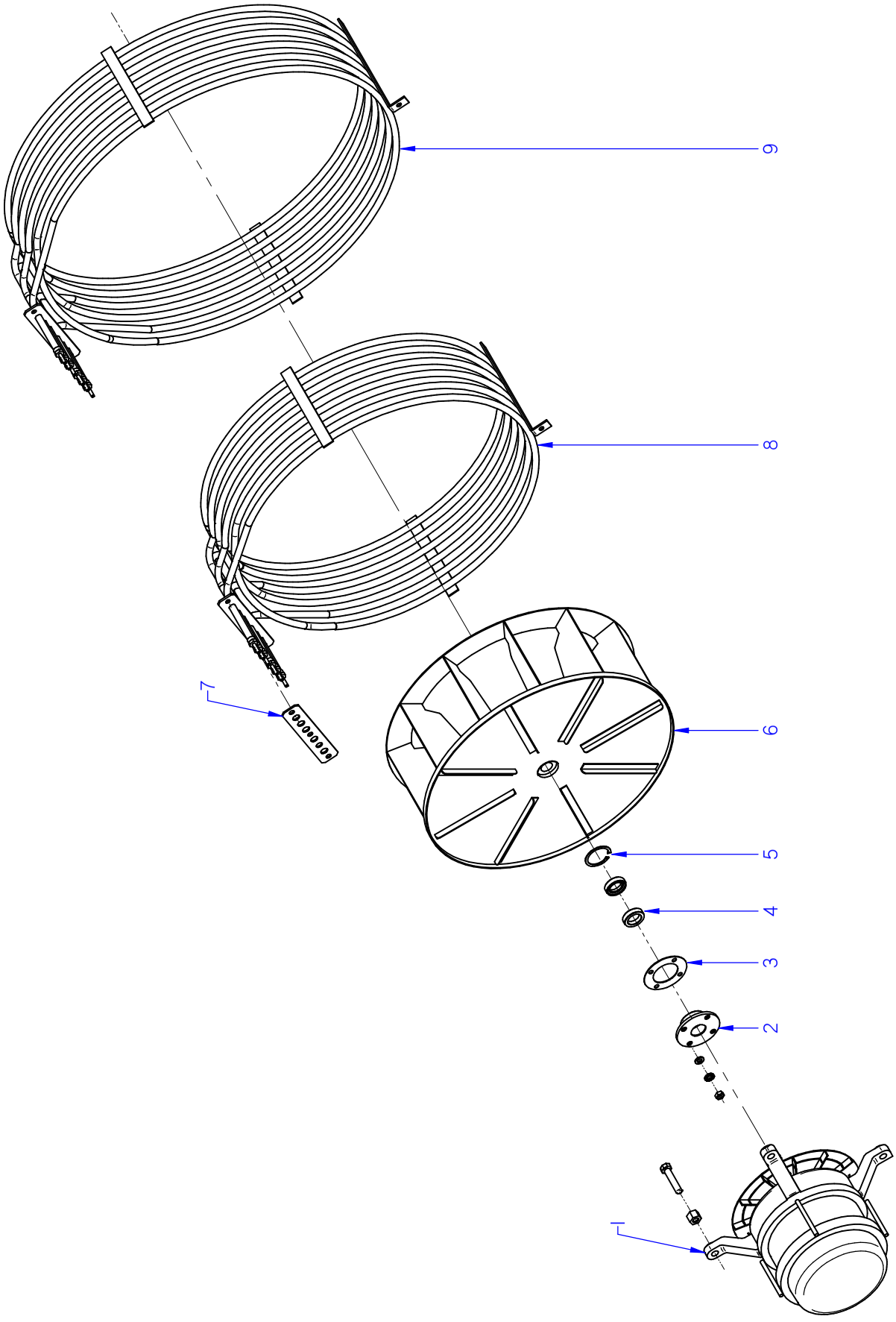

ITEM MARCADO EN COLOR = REPUESTO RECOMENDADO
COLOURED ITEM = RECOMMENDED SPARE PART

Nº plano / N º plane	Firma	Fecha / Date	Denominación / Denomination: TURBINA / TURBINE	Lamina / Sheet	
C-3003		2012-09	HORNOS AE; ACE; APE-061 / 101	4	Fagor Industrial S.Coop. FAGOR Oñate

APARATO / APPLIANCE	HORNOS / OVENS	ZONA / ZONE	TURBINA / TURBINE	PLANO DRAWING	C-3003

ITEM	CODIGO REFERENCE	DENOMINACION	DENOMINATION	ACE-061	AE-061	APE-061	ACE-101	AE-101	APE-101		RECOMEND.	ELIMINADO ELIMINATED	INTRODUCID. INTRODUCED	NOTAS
1	12024325	MOTOR 230V AC 3N650KW 1450RPM	MOTOR 230V AC 3N650KW 1450	1	1	1	1	1	1		X			
S/Nº	12023560	DISTANCIADOR MOTOR 10/21	SPACER MOTOR 10/21	4	4	4	4	4	4					
2	12024742	CASQUILLO RETEN 10/21	SEAL BUSHING 10/21	1	1	1	1	1	1					
3	12024221	JUNTA CASQUILLO RETEN	SEAL BUSHING GASKET	1	1	1	1	1	1					
4	12024510	RETEN 17X28X7V	RETAINER 28x17x7	2	2	2	2	2	2		X			
5	12010122	ANILLO DE SEGURIDAD Ø 28X1.2	SAFETY RING 28x1,2	1	1	1	1	1	1		X			
6	12024306	TURBINA RECTA Ø350X127 HANN.	TURBINE RECTA Ø350X127 HAN	1	1	1	1	1	1		X			
7	12041165	JUNTA RESIST. CIRCULAR 1/1 ADV	RESIST. CIRCULAR 1/1 ADV SEAL	1	1	1	2	2	2		X			
8	12039496	RESIST.CONVECCION INT. 9Kw ADV	CONVECTION RESIST. INT. ADV	1	1	1	1	1	1		X			
9	12039497	RESIST.CONVECCION EXT. 9Kw ADV	RESIST.CONVECCION EXT. ADV	_	_	_	1	1	1		X			

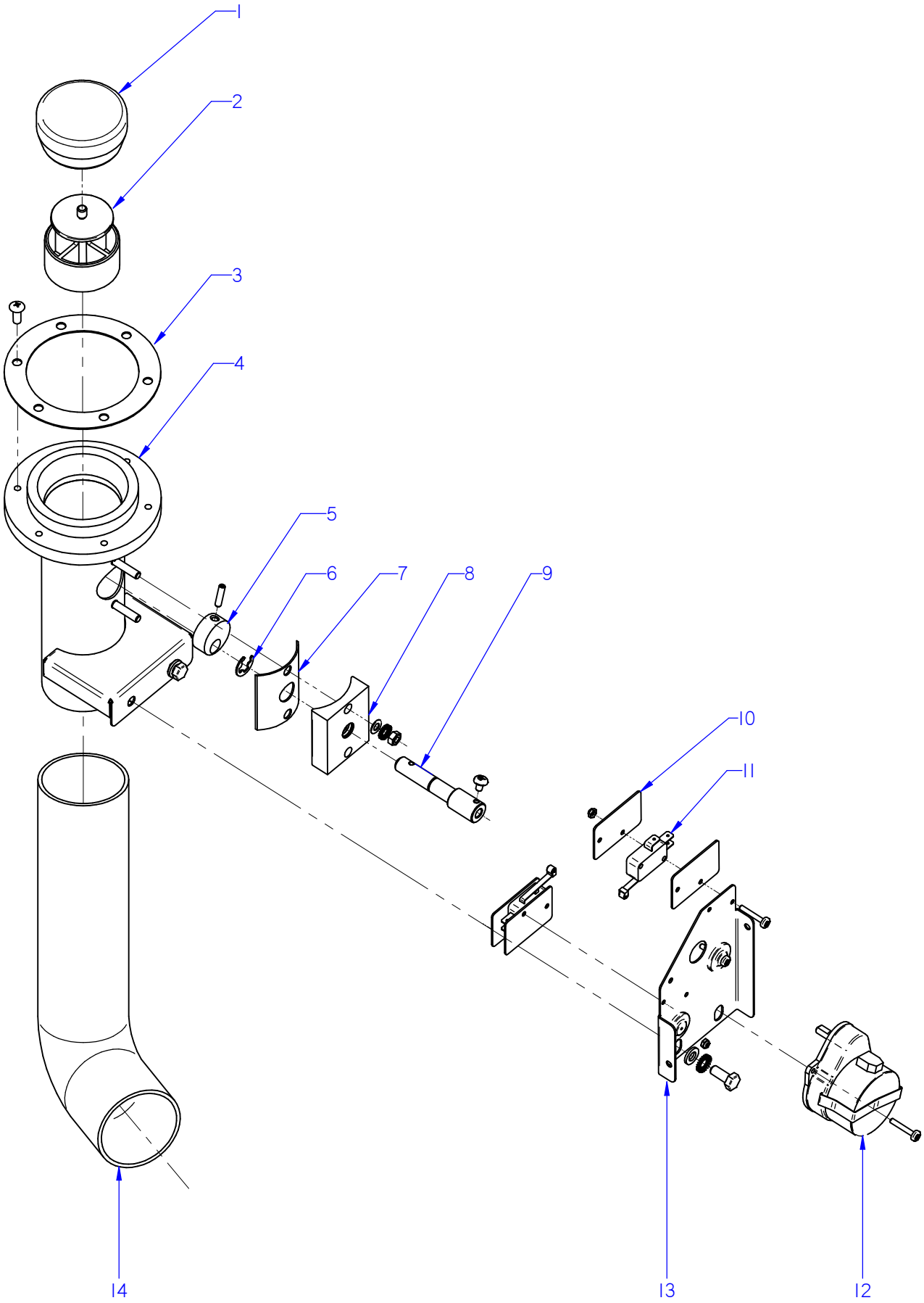

ITEM MARCADO EN COLOR = REPUESTO RECOMENDADO
COLOURED ITEM = RECOMMENDED SPARE PART

Nº plano / N º plane	Firma	Fecha / Date	Denominación / Denomination: CHIMENEA / FLUEPIPE	Lamina / Sheet	
C-3004		2012-09	HORNOS AE; ACE; APE-061 / 101	5	Fagor Industrial S.Coop. FAGOR Oñate

APARATO / APPLIANCE	HORNOS / OVENS	ZONA / ZONE	CHIMENEA / FLUEPIPE	PLANO DRAWING	C-3004

ITEM	CODIGO REFERENCE	DENOMINACION	DENOMINATION	ACE-061	AE-061	APE-061	ACE-101	AE-101	APE-101		RECOMEND.	ELIMINADO ELIMINATED	INTRODUCID. INTRODUCED	NOTAS
1	12024520	RETENCION DE VAPORES	CLOSE CHIMNEY	1	1	1	1	1	1					
2	12024500	GUIA RETENCION VAPORES	STEAM RETAINER GUIDE	1	1	1	1	1	1					
3	12023576	JUNTA BASE CHIMENEA	FLUEPIPE BASE SEAL	1	1	1	1	1	1					
S/Nº	12095516	JUNTA TORICA 5x1	O-RING 5x1	6	6	6	6	6	6				17.10.13	
4	12022868	CONJUNTO CHIMENEA	COMPLETE CHIMNEY	1	1	1	1	1	1			01.05.14		
4	12104226	CONJUNTO CHIMENEA	COMPLETE CHIMNEY	1	1	1	1	1	1				01.05.14	
5	12024328	LEVA EJE CHIMENEA	FLUEPIPE SHAFT CAM	1	1	1	1	1	1					
6	12010014	ARANDELA DE SEGURIDAD Ø8	SAFETY WASHER Ø8	1	1	1	1	1	1					
7	12023497	JUNTA EJE CHIMENEA	FLUEPIPE SHAFT SEAL	1	1	1	1	1	1					
8	12024436	GUIA EJE CHIMENEA	FLUEPIPE SHAFT GUIDE	1	1	1	1	1	1			01.05.14		
8	12098396	GUIA EJE CHIMENEA	FLUEPIPE SHAFT GUIDE	1	1	1	1	1	1				01.05.14	
S/Nº	12010274	JUNTA TORICA 9.19x2.62	O-RING 9.19x2.62	1	1	1	1	1	1				01.03.13	
9	12024435	EJE CHIMENEA ELECTRICA	ELECTRIC FLUEPIPE SHAFT	1	1	1	1	1	1			01.05.14		
9	12104228	EJE CHIMENEA ELECTRICA	ELECTRIC FLUEPIPE SHAFT	1	1	1	1	1	1				01.05.14	
10	12009985	PLACA SEPARADORA	SPACER PLATE	4	4	4	4	4	4					
11	12025193	INTERRUPTOR PUERTA	DOOR SWITCH	2	2	2	2	2	2		X			
12	12024638	MOTOR CHIMENEA	FLUEPIPE MOTOR	1	1	1	1	1	1		X			
13	12022146	ESCUA. AMARRE MOTOR CHIMEN.	FLUEPIPE MOTOR FASTENING BRAC	1	1	1	1	1	1					
14	12024122	TUBO FLEXIBLE Ø53X360	FLEXIBLE TUBE Ø53X360	1	1	1	1	1	1		X			
	12009962	ABRAZADERA 40*60	CLAMP 40*60	2	2	2	2	2	2					

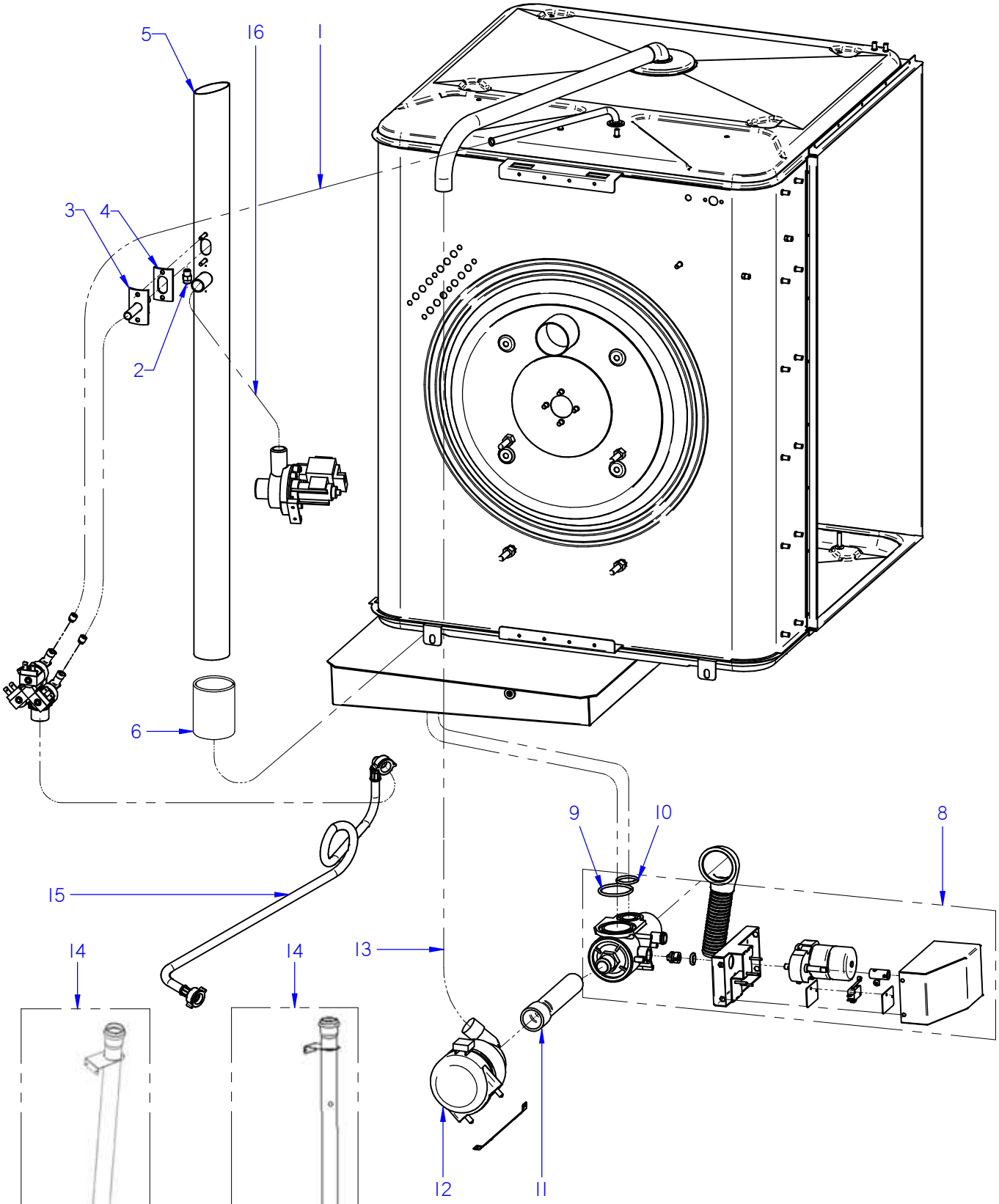

CONFIGURAC. ADVANCE PLUS
ADVANCE PLUS CONFIGURAT.

CONFIGURAC. ADVANCE / CONCEPT
ADVANCE / CONCEPT CONFIGURAT.

ITEM MARCADO EN COLOR = REPUESTO RECOMENDADO
COLOURED ITEM = RECOMMENDED SPARE PART

Nº plano / N º plane	Firma	Fecha / Date	Denominación / Denomination: CONDUCCIONES DE AGUA / WATER PIPES	Lamina / Sheet	
C-3005		01-2016	HORNOS AE; ACE; APE-061 / 101	6	Fagor Industrial S.Coop. FAGOR Oñate

APARATO / APPLIANCE	HORNOS / OVENS	ZONA / ZONE	CONDUCCIONES DE AGUA / WATER PIPES	PLANO DRAWING	C-3005

ITEM	CODIGO REFERENCE	DENOMINACION	DENOMINATION	ACE-061	AE-061	APE-061	ACE-101	AE-101	APE-101		RECOMEND.	ELIMINADO ELIMINATED	INTRODUCID. INTRODUCED	NOTAS
1	11000083	T. GOMA NEGRA Ø17*10	BLACK RUBBER PIPE Ø17*10	3	3	3	3	3	3					
	12010036	ABRAZADERA 12*20	CLAMP 12-20	6	10	8	6	10	8					
2	12024000	TOBERA 1/8	NOZZLE 1/8	1	1	1	1	1	1			31.03.13		
2	12049131	BOQUILLA 1/8M-B-1-3	INJECTOR 1/8M-B-1-3	1	1	1	1	1	1				31.03.13	
3	12039468	CONDUCC. VAHOS COMPLETO	COMPLETE VAPOUR DUCT	1	1	1	1	1	1					
4	12023605	JUNTA TUBO INYECTOR	INJECTOR PIPE SEAL	1	1	1	1	1	1					
5	12043803	CHIMENEA COMPLETA ACE 601	COMPL. FLUEPIPE ACE 601	1	_	_	_	_	_					
5	12039631	CHIMENEA COMPLETA 061	COMPLET FLUEPIPE 061	_	1	1	_	_	_					
5	12043845	CHIMENEA COMPLETA ACE 101-102	COMPL. FLUEPIPE ACE 101-102	_	_	_	1	_	_					
5	12039505	CHIMENEA COMPLETA VPE 101	COMPLET FLUEPIPE VPE 101	_	_	_	_	1	1					
6	12047901	EMPALME SILICONA Ø53	SILICONE JOINT Ø53	1	1	1	1	1	1					
	12007943	ABRAZADERA ELASTICA 62*66	ELAST. CLAMP 62*66	2	2	2	2	2	2					
8	**12093684**	**KIT VALVULA DESAGUE ADVAN.**	**VALVE DRAIN ADVANCE KIT**	_	_	**1**	_	_	**1**		X		**12.07.13**	
9	12010081	JUNTA TORICA Ø52X3,5	O-RING Ø52X3.5	_	_	1	_	_	1					
10	12010131	JUNTA TORICA Ø33x3,5	O-RING Ø33x3.5	_	_	1	_	_	1					
11	12024407	GOMA VALVULA BOMBA GAS	PUMP VALVE RUBBER GAZ	_	_	1	_	_	1					
	12010023	ABRAZADERA 20-32	CLAMP 20-32	_	_	1	_	_	1					
	12009997	ABRAZADERA 25-40	CLAMP 25-40	_	_	1	_	_	1					
12	12024708	MOTOBOMBA ACLARADO	MOTOR-PUMP	_	_	1	_	_	1		X			
	12024463	CONDENSADOR ELEC. 250V VDE	CONDENSER ELEC. 250V VDE	_	_	1	_	_	1					
13	11000005	TUBO SILIC. ALTA Tª D31*23	HIGH TEMP. SILIC. HOSE D31*23	_	_	1	_	_	2					
14	12047404	MOD CONJUNTO DESAGUE ADV	ADV DRAIN SET MODEL	1	1	1	1	1	1				03,12,12	
15	12025198	MANGUERA ENTRADA AGUA	WATER INLET HOSE	2	2	2	2	2	2					
16	11000157	TUBO SILIC. ALTA Tª D26*18	HIGH TEMP. SILIC. HOSE D26*18	_	2	2	_	2	2					
	12009628	ABRAZAD. ELASTICA 26,7*28,1	ELAST. CLAMP 26,7*28,1	_	1	1	_	1	1					

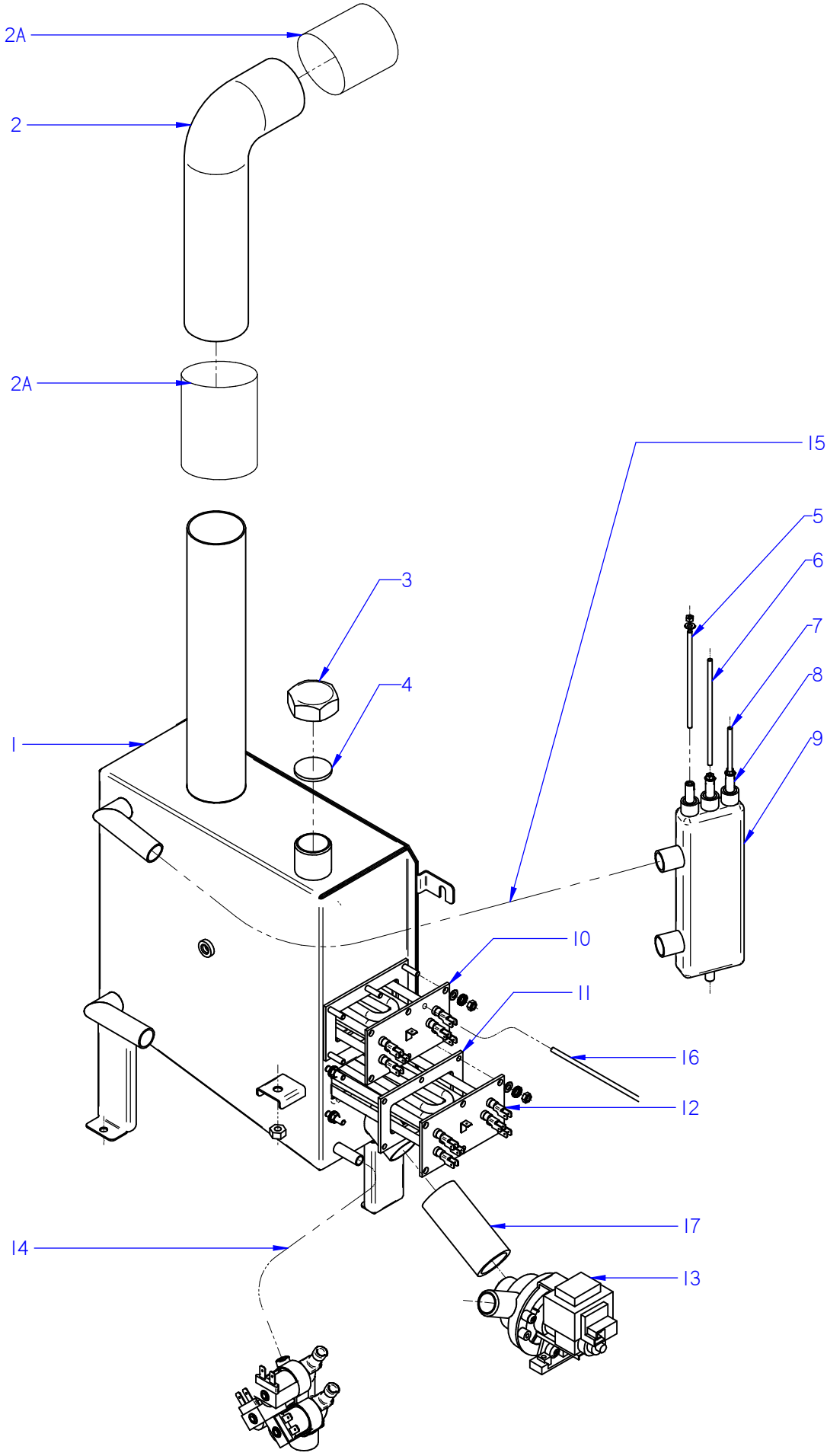

ITEM MARCADO EN COLOR = REPUESTO RECOMENDADO
COLOURED ITEM = RECOMMENDED SPARE PART

Nº plano / N º plane	Firma	Fecha / Date	Denominación / Denomination: CIRCUITO DE VAPOR / STEAM CIRCUIT	Lamina / Sheet	
C-3006	Iban R.	01-2016	HORNOS AE; APE-061 / 101	7	Fagor Industrial S.Coop. FAGOR Oñate

APARATO / APPLIANCE	HORNOS / OVENS	ZONA / ZONE	CIRCUITO DE VAPOR / STEAM CIRCUIT	PLANO DRAWING	C-3006

ITEM	CODIGO REFERENCE	DENOMINACION	DENOMINATION	AE-061	APE-061	AE-101	APE-101				RECOMEND.	ELIMINADO ELIMINATED	INTRODUCIDO INTRODUCED	NOTAS / NOTES
1	**12046048**	**KIT GENERADOR VAPOR 601**	**STEAM GENERATOR 601 KIT**	**1**	**1**	_	_				X			
1	**12046049**	**KIT GENERADOR VAPOR 101**	**STEAM GENERATOR 101 KIT**	_	_	**1**	**1**				X			
2	12041855	TUBO FLEXIBLE Ø53X360 VARILLA	FLEXIBLE TUBE Ø53X360	1	1	1	1					01.01.13		
2	12047930	EMPALME GENERADOR 061	GENERATOR JOINT 601	1	1	1	1				X		01.01.13	
2A	12047901	EMPALME SILICONA Ø53	SILICONE JOINT Ø53	2	2	2	2						01.01.13	
3	12009699	TUERCA TAPON 1"	PLUG NUT 1"	1	1	1	1							
4	12009884	ARANDELA Ø32	WASHER Ø32	1	1	1	1							
5	12023573	ELECTRODO ALTO	HIGH LEVEL ELECTRODE	1	1	1	1				X			
6	12023574	ELECTRODO BAJO	LOW LEVEL ELECTRODE	1	1	1	1				X			
7	12023575	ELECTRODO DE MASA	EARTH ELECTRODE	1	1	1	1				X			
8	12024460	GUIA AISLANTE	INSULATION GUIDE	3	3	3	3							
9	12024419	BOTE DE NIVELES	LEVELS VESSEL	1	1	1	1					02.06.14		
9	12113061	BOTE DE NIVELES INOX	LEVELS VESSEL S.STEEL	1	1	1	1						02.06.14	
10	12024752	RESISTENCIA 3x3000W 230V	RESISTOR 3x3000W 230V	1	1	1	1				X			
11	12023680	JUNTA CIERRE RESISTENCIAS	RESISTOR SEAL	1	1	2	2							
12	12024747	RESISTENCIA 3x3000W	RESISTOR 3x3000W	_	_	1	1				X			
13	12039546	MOTOBOMBA 230V AC 1N 50/60Hz	PUMP 230V AC 50/60Hz 30W 1N	1	1	1	1				X			
14	11000083	T. GOMA NEGRA Ø17*10	BLACK RUBBER PIPE Ø17*10	1	1	1	1							
15	11000157	TUBO SILICONA Tº Ø 26*18	HIGH SILICON PIPE Tº Ø 26*18	2	2	2	2							
	12009628	ABRAZAD. ELASTICA 26,7*28,1	ELAST. CLAMP 26,7*28,1	4	4	4	4							
16	12023901	CONJ. TERMOPAR VAPOR (Tg)	STEAM THERMOCOUPLE (Tg)	1	1	1	1				X			
17	12041924	COND. CALDERIN-BOMBA DES.	BOILER-DRAIN.PUMP PIPE	1	1	1	1							
	12044862	ABRAZADERA ELAS.TOR.30,5-35	ELASTIC CLAMP.TOR.30,5-35	2	2	2	2							

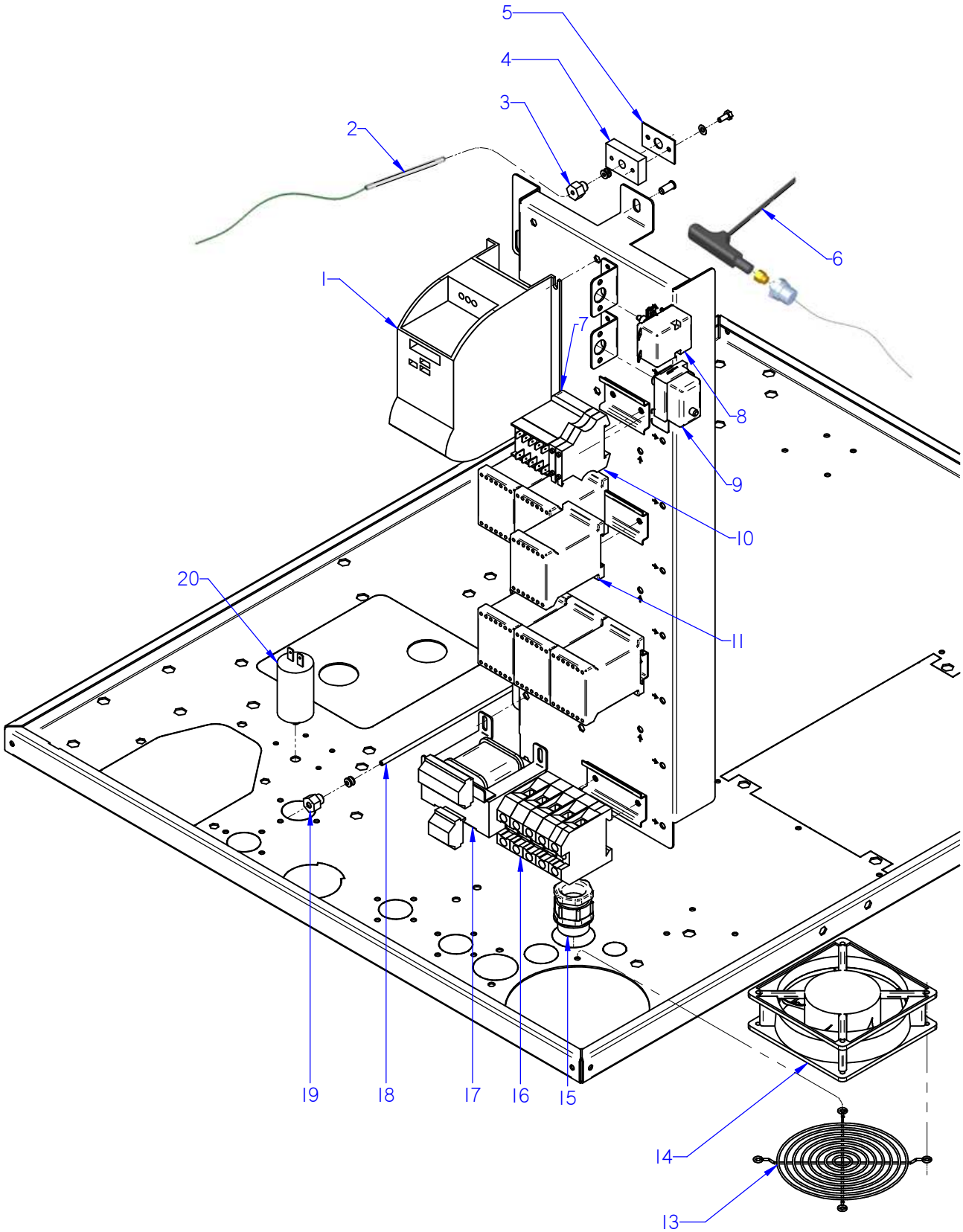

ITEM MARCADO EN COLOR = REPUESTO RECOMENDADO
COLOURED ITEM = RECOMMENDED SPARE PART

Nº plano / N º plane	Firma	Fecha / Date	Denominación / Denomination: CUADRO ELECTRICO / ELECTRIC PANEL	Lamina / Sheet	
C-3007		2012-09	HORNOS AE; ACE; APE-061 / 101	8	Fagor Industrial S.Coop. FAGOR Oñate

APARATO / APPLIANCE	HORNOS / OVENS	ZONA / ZONE	CUADRO ELECTRICO / ELECTRIC BOARD	PLANO DRAWING	C-3007

ITEM	CODIGO REFERENCE	DENOMINACION	DENOMINATION	ACE-061	AE-061	APE-061	ACE-101	AE-101	APE-101		RECOMEND.	ELIMINADO ELIMINATED	INTRODUCID. INTRODUCED	NOTAS
1	12048794	REP VARIADOR REGULADO 061E	REGULATED VARIATOR 061E	1	1	1	_	_	_		X			
1	12048798	REP VARIADOR REGULADO ADV	REGULATED VARIATOR ADV	_	_	_	1	1	1		X			
2	12024642	CONJUN. TERMOPAR CAMARA (Tn)	CHAMBER THERMOCOUPLE (Tn)	1	1	1	1	1	1		X			
3	12023581	RACORD CIERRE SONDA	PROBE CLOSING ADAPTOR	2	2	2	2	2	2					
S/Nº	12024247	BICONO CIERRE SONDA	PROBE CLOSING BICONE	1	1	1	1	1	1					
4	12023737	BASE CIERRE SONDA	FIXING CORE PROBE	1	1	1	1	1	1					
5	12023504	JUNTA PASAMUROS SIMPLE	SIMPLE	1	1	1	1	1	1					
6	12039548	SONDA PINCHO ADVANCE	ADVANCE PROBE PINCHO	1	1	1	1	1	1		X			
	12040566	CONTRATUERCA H 1/4"	COUNTERNUT H 1/4"	1	1	1	1	1	1					
7	12024011	CONTACTOR 230 V. 50-60 HZ	230 V. 50-60 HZ CONTACTOR	1	1	1	1	1	1					
8	12024591	TERMOSTATO LIMITADOR 10/21	LIMITER THERMOSTAT10/21	1	1	1	1	1	1		X			
9	12024884	TERMOSTATO LIMITADOR CORTE	THERMOSTAT LIMITER	_	1	1	_	1	1		X			
10	12025158	BORNAS PORTA FUSIBLES	FUSE HOLDER TERMINAL	2	2	2	2	2	2					
S/Nº	12024152	FUSIBLE 10A Ø5MM 20X5	10A Ø5MM 20X5 FUSE	2	2	2	2	2	2					
11	12024040	CONTAC. SIRIUS 3R 230V.50-60	SIRIUS 3R 230V.50-60 CONTAC.	2	3	3	4	6	6					
13	12024615	PROTECCION VENTILADOR	FAN PROTECTION	1	1	1	1	1	1					
14	12023862	VENTILADOR 230V.50-60HZ	FAN 230V 50/60HZ	2	2	2	2	2	2		X			
15	12009963	PRENSA ESTOPAS	STUFFING BOX	1	1	1	_	_	_					
15	12009927	PRENSAESTOPA PG-21	STUFFING BOX PG-21	_	_	_	1	1	1					
	12010105	CONTRATUERCA (GAES)	COUNTERNUT (GAES)	1	1	1	_	_	_					
	12010063	CONTRATUERCA (GAES)	COUNTERNUT (GAES)	_	_	_	1	1	1					
	12009981	JUNTA GOMA (GAES)	RUBBER BOARD (GAES)	1	1	1	_	_	_					
	12009994	JUNTA GOMA (GAES)	RUBBER BOARD (GAES)	_	_	_	1	1	1					
16	12023373	BORNA PASO 57A 10mm2 1vía UL	GREY PHASE 57A 10mm2 1vía UL	3	3	3	_	_	_					
	12025224	BORNA NEUTRO AZUL 57A 10mm2	NEUTRAL TERMINAL 57A 10mm2	1	1	1	_	_	_					
	12024743	BORNA TIERRA 10 WPE-10103.O	EARTH TERMINAL10 WPE-10103.O	1	1	1	_	_	_					
	12024420	BORNA PASO 35MM	GREY PHASE 35 TERMINAL	_	_	_	3	3	3					
	12025143	BORNA PASO AZUL 35MM	NEUTRAL TERMINAL 35 BLUE	_	_	_	1	1	1					
	12024515	BORNA TIERRA 35MM	EARTH TERMINAL 35mm	_	_	_	1	1	1					
17	12024173	TRANSFORMADOR 12-0-12-0,24-0	TRANSFORMER 12-0-12-0,24-0	1	1	1	1	1	1					

APARATO / APPLIANCE	HORNOS / OVENS	ZONA / ZONE	CUADRO ELECTRICO / ELECTRIC BOARD	PLANO DRAWING	C-3007

ITEM	CODIGO REFERENCE	DENOMINACION	DENOMINATION	ACE-061	AE-061	APE-061	ACE-101	AE-101	APE-101		RECOMEND.	ELIMINADO ELIMINATED	INTRODUCID. INTRODUCED	NOTAS
18	12041634	CONJ. TERMOPAR VAPOR L360 (Tv)	STEAM THERMOCOUPLE L360 (Tv)	1	1	_	1	1	_		X			
18	12044609	CONJUNTO TERMOPAR L425 (Tv)	THERMOCOUPLE L425 (Tv)	_	_	1	_	_	1		X			
19	12041049	RACORD CIERRE SONDA Ø 4	PROBE CLOSING ADAPTOR Ø 4	1	1	1	1	1	1					
S/Nº	12043409	BICONO CIERRE SONDA Ø4	PROBE CLOSING BICONE Ø4	1	1	1	1	1	1					
20	12025135	CONDENSADOR 3 µF	CONDENSER 3 µF	_	_	1	_	_	1					

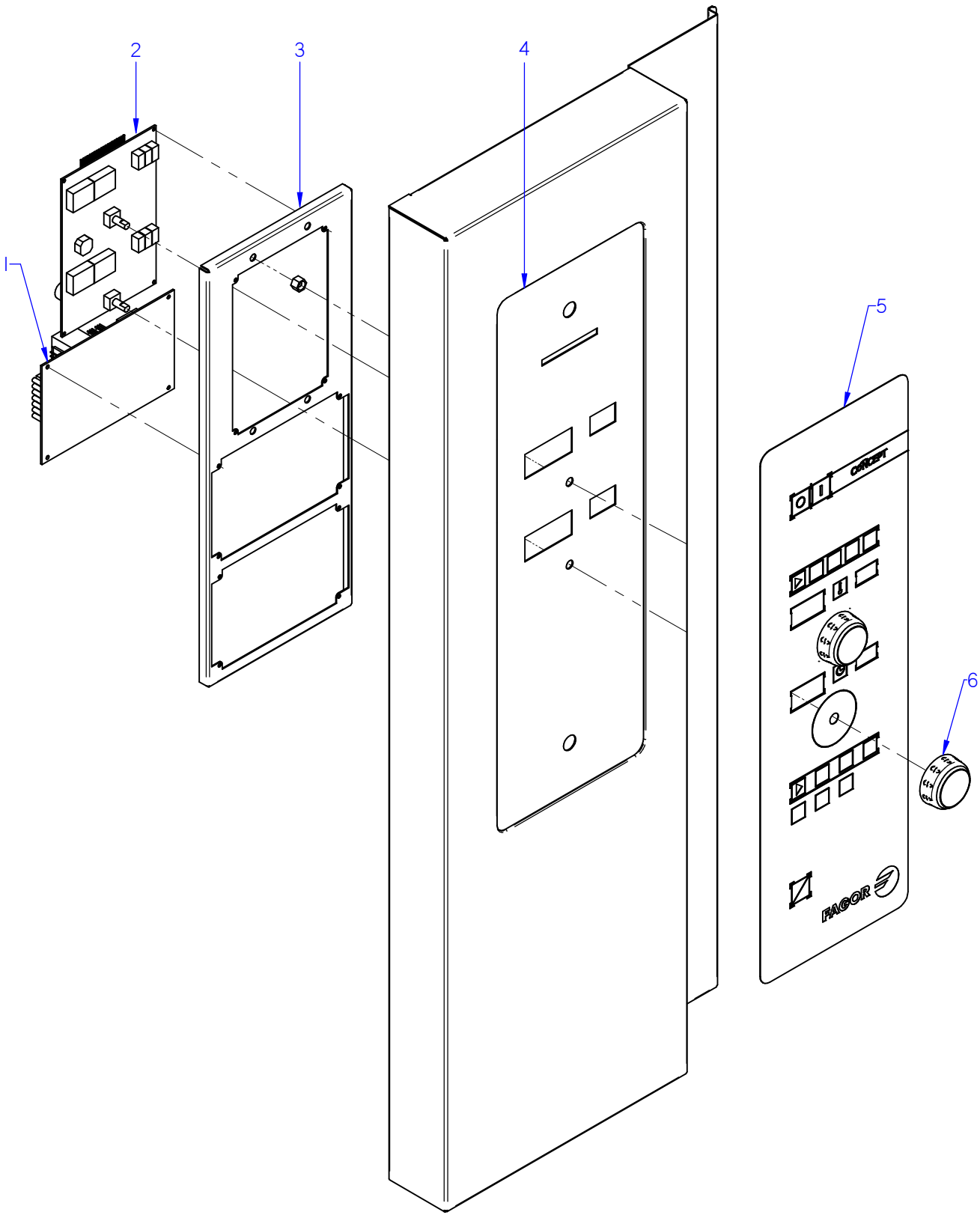

ITEM MARCADO EN COLOR = REPUESTO RECOMENDADO
COLOURED ITEM = RECOMMENDED SPARE PART

Nº plano / N º plane	Firma	Fecha / Date	Denominación / Denomination: PORTAMANDOS / CONTROL HOLDER	Lamina / Sheet	
C-3008		2012-09	HORNOS ACE-061 / 101	9	Fagor Industrial S.Coop. FAGOR Oñate

APARATO / APPLIANCE	HORNOS / OVENS	ZONA / ZONE	CONJUNTO ELECTRICO PORTAMANDOS / CONTROL HOLDER ELECTRIC UNIT	PLANO DRAWING	C-3008

ITEM	CODIGO REFERENCE	DENOMINACION	DENOMINATION	ACE-061	ACE-101						RECOMEND.	ELIMINADO ELIMINATED	INTRODUCID. INTRODUCED	NOTAS
1	12046659	CONTROL TARJETA CAM.12V AC .	CARD CONTROL 12V AC 50/60Hz	1	1							01.01.16		
1	12130672	TARJETA CAMARA GRAB. LAVADO	RECORD. CHAMBER CARD WASH	1	1						X		01.01.16	Serial N. 8100603816
2	12046671	VISUALIZADOR 12V AC 50/60Hz 12D	12V AC 50/60Hz 12D DISPLAY	1	1							01.01.16		
2	12130674	TARJ. PORTAM. GRABADA LAVADO	REC. COTRL PANEL CARD WASH	1	1						X		01.01.16	Serial N. 8100603816
3	12043668	SOPORTE PROGRA. CONCEPT ADV.	CIRCUIT SUPPORT CONCEPT AD	1	1									
4	12093219	FRENTE PORTAM. CONCEPT	CONTROL PANEL FRONT CONC.	1	1									
S/Nº	12041815	JUNTA PORTAMANDOS ADV PLUS	CONTROL PANEL SEAL ADV PLUS	1	1									
5	12044109	SERIGRAFIA CONCEPT ADVANCE E.	SERIGRAPHY CONCEPT ADVAN	1	1							01.01.16		
5	12129318	SERIGRAFIA ACE-ACG	ACE-ACG SERIGRAPHY	1	1						X		01.01.16	Serial N. 8100603816
6	12046201	BOTON CONCEPT ADV	CONTROL BUTTON CONC. ADV	2	2									

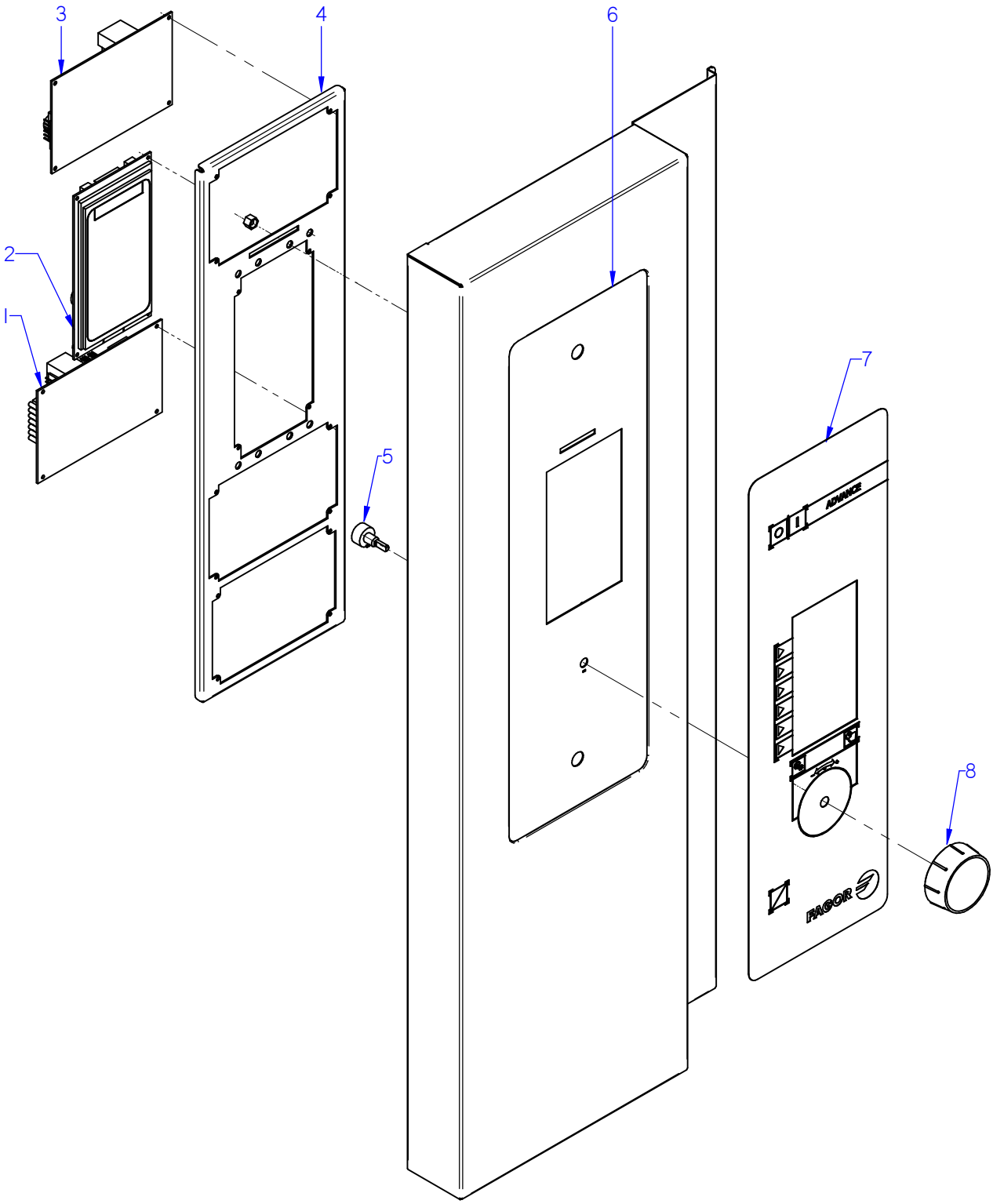

ITEM MARCADO EN COLOR = REPUESTO RECOMENDADO
COLOURED ITEM = RECOMMENDED SPARE PART

Nº plano / N º plane	Firma	Fecha / Date	Denominación / Denomination: PORTAMANDOS / CONTROL HOLDER	Lamina / Sheet	
C-3009		2012-09	HORNOS AE-061 / 101	10	Fagor Industrial S.Coop. FAGOR Oñate

APARATO / APPLIANCE	HORNOS / OVENS	ZONA / ZONE	CONJUNTO ELECTRICO PORTAMANDOS / CONTROL HOLDER ELECTRIC UNIT	PLANO DRAWING	C-3009

ITEM	CODIGO REFERENCE	DENOMINACION	DENOMINATION	AE-061	AE-101						RECOMEND.	ELIMINADO ELIMINATED	INTRODUCID. INTRODUCED	NOTAS
1	12046659	CONTROL TARJETA CAM.12V AC .	CARD CONTROL 12V AC 50/60Hz	1	1							01.01.16		
1	12130672	TARJETA CAMARA GRAB. LAVADO	RECORD. CHAMBER CARD WASH	1	1						X		01.01.16	Serial N. 8100608422
2	12046672	TARJETA PORTAMAND. VISUAL	CONTROL PANEL VISUAL CARD	1	1							01.01.16		
2	12130675	REP PORTAM. ADVANCE LAVADO	RECORD. C. PANEL CARD WASH	1	1						X		01.01.16	Serial N. 8100608422
3	12046670	CONTROL TARJETA CALD. 12V AC 50/6	CARD CONTROL 12V AC 50/60Hz	1	1						X			
4	12039536	SOPORTE CIRCUITOS ADVANCE	CIRCUIT SUPPORT ADVANCE	1	1									
5	12043405	ENCODER GAMA ADVANCE	ADVANCE RANGE ENCODER	1	1						X			
6	12093236	FRENTE PORTAM. AE-AG COMP.	CONTROL PANEL FRONT AE-AG	1	1									
S/Nº	12041815	JUNTA PORTAMANDOS ADV PLUS	CONTROL PANEL SEAL ADV PLUS	1	1									
7	12044139	SERIGRAFIA ADVANCE	ADVANCE SERIGRAPHY	1	1							01.01.16		
7	12129465	SERIGRAFIA ADVANCE LAVADO	ADVANCE SERIGRAPHY WASHING	1	1						X		01.01.16	Serial N. 8100608422
8	12044074	BOTON DE MANDO ADV	ADV CONTROL BUTTON	1	1									

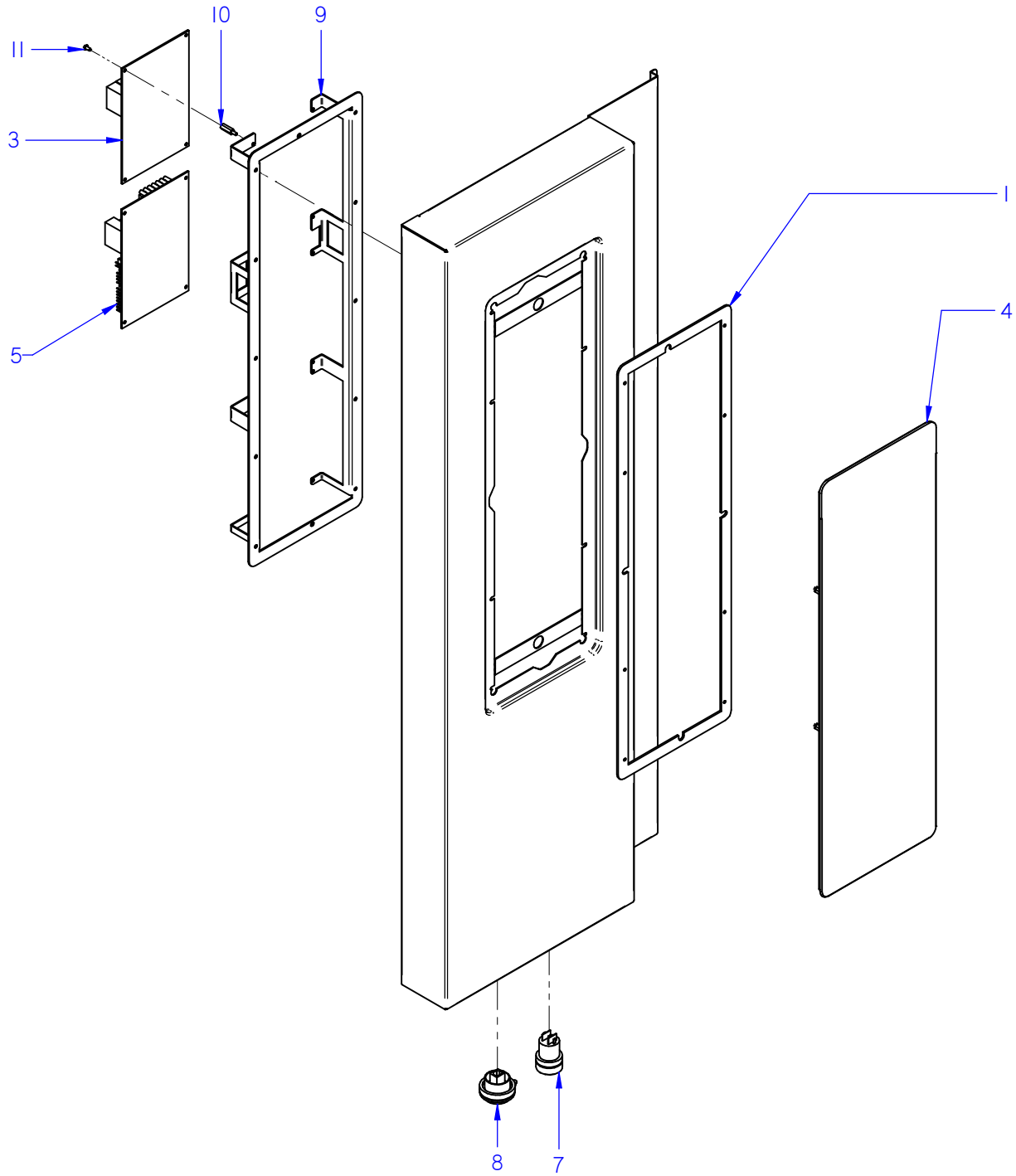

ITEM MARCADO EN COLOR = REPUESTO RECOMENDADO
COLOURED ITEM = RECOMMENDED SPARE PART

Nº plano / N º plane	Firma	Fecha / Date	Denominación / Denomination: PORTAMANDOS / CONTROL HOLDER	Lamina / Sheet	
C-3010		05-2015	HORNOS APE-061 / 101	11	Fagor Industrial S.Coop. FAGOR Oñate

APARATO / APPLIANCE	HORNOS / OVENS	ZONA / ZONE	CONJUNTO ELECTRICO PORTAMANDOS / CONTROL HOLDER ELECTRIC UNIT	PLANO DRAWING	C-3010

ITEM	CODIGO REFERENCE	DENOMINACION	DENOMINATION	APE-061	APE-101						RECOMEND.	ELIMINADO ELIMINATED	INTRODUCID. INTRODUCED	NOTAS
1	12041815	JUNTA PORTAMANDOS ADV PLUS	CONTROL PANEL SEAL ADV PLUS	1	1						X			
	12010289	TUERCA AUTOB. M3 DIN985	SELF-LOCK NUT M3 DIN985	6	6									
	12010288	CLIP SUJECIÓN RÁPIDA Ø 4	RAPID CONNECT CLIP Ø 4	12	12									
3	12046670	CONTROL TARJETA CALD. 12V AC 50/6(	CARD CONTROL 12V AC 50/60Hz	1	1						X			
4	12046579	PLAT ADV PLUS CON SOFTWARE	ADV PLUS SOFTWARE PLATF.	1	1							25.05.15		
4	12121349	PLAT ADV PLUS CON SOFTWARE	ADV PLUS SOFTWARE PLATF.	1	1						X		25.05.15	
5	12046659	CONTROL TARJETA CAM.12V AC .	CARD CONTROL 12V AC 50/60Hz	1	1							01.01.16		
5	12130672	TARJETA CAMARA GRAB. LAVADO	RECORD. CHAMBER CARD WASH	1	1						X		01.01.16	Serial N. 8100608593
7	12023927	PULSADOR SERIE MICRO	MICRO SWITCH SERIES	1	1									
8	12024064	CONECTOR USB VISUAL PLUS	VISUAL PLUS USB CONNECTOR	1	1									
S/Nº	12023647	TAPA USB VISUAL PLUS	VISUAL PLUS USB COVER	1	1									
9	12127553	SOPORTE TARJETAS PLUS	PLUS CARDS SUPPORT	1	1									
10	12025260	DISTANCIADOR 3M	3M SPACER	8	8									
11	12024612	FIJACION CIRCUITO	CARD CONTROL FIXER	4	4									

APARATO / APPLIANCE	HORNOS / OVENS	ZONA / ZONE	VARIOS / MISCELLANEOUS	PLANO DRAWING	

ITEM	CODIGO REFERENCE	DENOMINACION	DENOMINATION	ACE-061	AE-061	APE-061	ACE-101	AE-101	APE-101			ELIMINADO ELIMINATED	INTRODUCID. INTRODUCED	NOTAS
	12043788	INSTAL. ELECTRICA ACE 06 1	ELEC. INSTALL. ACE 06 1	1	_	_	_	_	_					
	12043785	INSTAL. ELECTRICA APE 06 1	ELEC. INSTALL. APE 06 1	_	1	1	_	_	_					
	12043773	INSTAL. ELECTRICA ACE 101, 102	ELEC. INSTALL. ACE 101, 102	_	_	_	1	_	_					
	12041848	INSTAL. ELECTRICA APE,AE,101,102	ELEC. INSTALL. APE,AE,101,102	_	_	_	_	1	1					
	12040567	CABLEADO LAVADO 201-102-202	WIRING CABLE 201-102-202	_	_	1	_	_	1					
	12009059	CABLEADO LAVADO 06,101	WIRING CABLE 06,101	_	_	1	_	_	1					
	12008976	CABLEADO PULSADOR RESET	RESET BUTTON WIRING	_	_	1	_	_	1					
	12043800	CABLEADO RESISTENCI. ACE 101	RESISTOR WIRING ACE 101	_	_	_	1	_	_					
	12041911	CABLEADO RESISTENCI. APE 101	RESISTOR WIRING APE 101	_	_	_	_	1	1					
	12023775	CABLE USB VISUAL PLUS 1,5M	VISUAL PLUS USB CABLE 1,5M	_	_	1	_	_	1					
	12009302	CABLEADO FUERZA COE101	POWER WIRE COE101	_	_	_	1	_	_					
	12009443	CABLEADO FUERZA VPE-101	POWER WIRE VPE VPE-101	_	_	_	_	1	1					
	12024569	CABLEADO LUZ INTERIOR HVG10-	INTERIOR LIGHT WIRING HVG10-	1	1	1	1	1	1					
	12023696	CABLEADO BMF	WIRING BMF	1	1	1	1	1	1					
	12009277	CD HACCP VISUAL COMPLETO	HACCP CD COMPLETE VISUAL	_	_	1	_	_	1					
	12025235	CONECTOR PASO 3,96MM 8 VIAS	CONNECTOR ROUTES 3,96MM 8	1	1	1	1	1	1					

APARATO / APPLIANCE	HORNOS / OVENS	ZONA / ZONE	REPUESTOS RECOMENDADOS RECOMMENDED SPARE PART	PLANO DRAWING	

ITEM	CODIGO REFERENCE	DENOMINACION	DENOMINATION	ACE-061	AE-061	APE-061	ACE-101	AE-101	APE-101			ELIMINADO ELIMINATED	INTRODUCID. INTRODUCED	NOTAS
16	**12046015**	**KIT PUERTA 061**	**DOOR 061 KIT**	**1**	**1**	**1**	_	_	_					C-3001
16	**12046018**	**KIT PUERTA 101**	**DOOR 101 KIT**	_	_	_	**1**	**1**	**1**					C-3001
1	**12046041**	**KIT CRISTAL INTER. 061**	**061 INNER GLASS KIT**	**1**	**1**	**1**	_	_	_					C-3001
1	**12046042**	**KIT CRISTAL INTER. 101**	**101 INNER GLASS KIT**	_	_	_	**1**	**1**	**1**					C-3001
3	12039312	BISAGRA SUPERIOR	UPPER HINGE	1	1	1	1	1	1					C-3001
7	12047967	BASE BISAGRA INFERIOR 6 DIEN	LOWER HINGE BASE	1	1	1	1	1	1					C-3001
8	12047580	REP. MANILLA 1/1 ADVANCE	HANDLE 1/1 ADVANCE	1	1	1	1	1	1					C-3001
9	12024560	INTERRUPTOR MAGNETICO AC	MAGNETIC SWITCH AC	1	1	1	1	1	1					C-3001
14	12023849	ANCLAJE PUERTA	DOOR ANCHORING	1	1	1	1	1	1					C-3001
15	12039599	JUNTA PUERTA COMPL. 061	DOOR JOINT 061	1	1	1	_	_	_					C-3001
15	12039475	JUNTA PUERTA COMPL. 101	DOOR JOINT 101	_	_	_	1	1	1					C-3001
13	12025161	E.V. 230VAC 50/60Hz 1V	SOLENOID VALVE 230VAC 1 W	1	_	1	1	_	1					C-3002
14	12023794	E.V. 230VAC 50/60Hz 2V	SOLENOID VALVE 230VAC 2 W	1	1	_	1	1	_					C-3002
14	12115418	E.V. 230VAC 50/60Hz 3V	SOLENOID VALVE 230VAC 3 W	_	1	1	_	1	1					C-3002
15	12095019	TERMOSTATO_261_NA_51ºC	THERMOSTAT_261_NA_51ºC	1	1	_	1	1	_					C-3002
1	12024325	MOTOR 230V AC 3N650KW 1450RPM	MOTOR 230V AC 3N650KW 1450	1	1	1	1	1	1					C-3003
4	12024510	RETEN 17X28X7V	RETAINER 28x17x7	2	2	2	2	2	2					C-3003
5	12010122	ANILLO DE SEGURIDAD Ø 28X1.2	SAFETY RING 28x1,2	1	1	1	1	1	1					C-3003
6	12024306	TURBINA RECTA Ø350X127 HANN.	TURBINE RECTA Ø350X127 HAN	1	1	1	1	1	1					C-3003
7	12041165	JUNTA RESIST. CIRCULAR 1/1 ADV	RESIST. CIRCULAR 1/1 ADV SEAL	1	1	1	2	2	2					C-3003
8	12039496	RESIST.CONVECCION INT. 9Kw ADV	CONVECTION RESIST. INT. ADV	1	1	1	1	1	1					C-3003
9	12039497	RESIST.CONVECCION EXT. 9Kw ADV	RESIST.CONVECCION EXT. ADV	_	_	_	1	1	1					C-3003
11	12025193	INTERRUPTOR PUERTA	DOOR SWITCH	2	2	2	2	2	2					C-3004
12	12024638	MOTOR CHIMENEA	FLUEPIPE MOTOR	1	1	1	1	1	1					C-3004
14	12024122	TUBO FLEXIBLE Ø53X360	FLEXIBLE TUBE Ø53X360	1	1	1	1	1	1					C-3004
8	**12093684**	**KIT VALVULA DESAGUE ADVAN.**	**VALVE DRAIN ADVANCE KIT**	_	_	**1**	_	_	**1**					C-3005
12	12024708	MOTOBOMBA ACLARADO	MOTOR-PUMP	_	_	1	_	_	1					C-3005
1	**12046048**	**KIT GENERADOR VAPOR 601**	**STEAM GENERATOR 601 KIT**	_	**1**	**1**	_	_	_					C-3006
1	**12046049**	**KIT GENERADOR VAPOR 101**	**STEAM GENERATOR 101 KIT**	_	_	_	_	**1**	**1**					C-3006

APARATO / APPLIANCE	HORNOS / OVENS	ZONA / ZONE	REPUESTOS RECOMENDADOS RECOMMENDED SPARE PART	PLANO DRAWING	

ITEM	CODIGO REFERENCE	DENOMINACION	DENOMINATION	ACE-061	AE-061	APE-061	ACE-101	AE-101	APE-101			ELIMINADO ELIMINATED	INTRODUCID. INTRODUCED	NOTAS
2	12047930	EMPALME GENERADOR 061	GENERATOR JOINT 601	_	1	1	_	1	1					C-3006
5	12023573	ELECTRODO ALTO	HIGH LEVEL ELECTRODE	_	1	1	_	1	1					C-3006
6	12023574	ELECTRODO BAJO	LOW LEVEL ELECTRODE	_	1	1	_	1	1					C-3006
7	12023575	ELECTRODO DE MASA	EARTH ELECTRODE	_	1	1	_	1	1					C-3006
10	12024752	RESISTENCIA 3x3000W 230V	RESISTOR 3x3000W 230V	_	1	1	_	1	1					C-3006
12	12024747	RESISTENCIA 3x3000W	RESISTOR 3x3000W	_	_	_	_	1	1					C-3006
13	12039546	MOTOBOMBA 230V AC 1N 50/60Hz	PUMP 230V AC 50/60Hz 30W 1N	_	1	1	_	1	1					C-3006
16	12023901	CONJUN. TERMOPAR VAPOR (Tg)	STEAM THERMOCOUPLE UNIT (Tg)	_	1	1	_	1	1					C-3006
1	12048794	REP VARIADOR REGULADO 061E	REGULATED VARIATOR 061E	1	1	1	_	_	_					C-3007
1	12048798	REP VARIADOR REGULADO ADV	REGULATED VARIATOR ADV	_	_	_	1	1	1					C-3007
2	12024642	CONJUN. TERMOPAR CAMARA (Tn)	CHAMB THERMOCOUPLE UNIT (Tn)	1	1	1	1	1	1					C-3007
6	12039548	SONDA PINCHO ADVANCE	ADVANCE PROBE PINCHO	1	1	1	1	1	1					C-3007
8	12024591	TERMOSTATO LIMITADOR 10/21	LIMITER THERMOSTAT10/21	1	1	1	1	1	1					C-3007
9	12024884	TERMOSTATO LIMITADOR CORTE	THERMOSTAT LIMITER	_	1	1	_	1	1					C-3007
14	12023862	VENTILADOR 230V.50-60HZ	FAN 230V 50/60HZ	2	2	2	2	2	2					C-3007
17	12024173	TRANSFORMADOR 12-0-12-0,24-0	TRANSFORMER 12-0-12-0,24-0	1	1	1	1	1	1					C-3007
18	12041634	CONJUN.TERMOPAR VAPOR (Tv)	STEAM THERMOCOUPLE UNIT (Tv)	1	1	_	1	1	_					C-3007
18	12044609	CONJUNTO TERMOPAR L425 (Tv)	THERMOCOUPLE UNIT L425 (Tv)	_	_	1	_	_	1					C-3007
1	12130672	TARJETA CAMARA GRAB. LAVADO	RECORD. CHAMBER CARD WASH	1	1	1	1	1	1					C-3008 / C-3009 / C-3010
2	12130674	TARJ. PORTAM. GRABADA LAVADO	REC. COTRL PANEL CARD WASH	1	_	_	1	_	_					C-3008
5	12129318	SERIGRAFIA ACE-ACG	ACE-ACG SERIGRAPHY	1	_	_	1	_	_					C-3008
2	12130675	REP PORTAM. ADVANCE LAVADO	RECORD. C. PANEL CARD WASH	_	1	_	_	1	_					C-3009
3	12046670	CONTROL TARJETA CALD. 12V AC 50/6	CARD CONTROL 12V AC 50/60Hz	_	1	1	_	1	1					C-3009 / C-3010
5	12043405	ENCODER GAMA ADVANCE	ADVANCE RANGE ENCODER	_	1	_	_	1	_					C-3009
7	12129465	SERIGRAFIA ADVANCE LAVADO	ADVANCE SERIGRAPHY WASHING	_	1	_	_	1	_					C-3009
1	12041815	JUNTA PORTAMANDOS ADV PLUS	CONTROL PANEL SEAL ADV PLUS	1	1	1	1	1	1					C-3010
4	12121349	PLAT ADV PLUS CON SOFTWARE	ADV PLUS SOFTWARE PLATF.	_	_	1	_	_	1					C-3010

APE 06 1, APE 10 1, APE 10 2, APE 20 1, APE 20 2
AE 06 1, AE 10 1, AE 10 2, AE 20 1, AE 20 2
ACE 06 1, ACE 10 1, ACE 10 2, ACE 20 1, ACE 20 2

Mod. 101	RC2=3x3KW
Mod. 201	RC2=3x6KW
Mod. 102	RC2=3x5KW
Mod. 202	RC2=6x5KW

Mod. 061, 101	RC1=3x3KW
Mod. 201	RC1=3x6KW
Mod. 102	RC1=3x5KW
Mod. 202	RC1=6x5KW

Mod. VPE, VE,	Mod. 061, 101	RV1=3x3KW
	Mod. 201, 102	RV1=6x3KW
	Mod. 202	RV1=9x3KW
	Mod. 101, 102, 201	RV2=3x3KW
	Mod. 202	RV2=9x3KW

3 ~ 400V

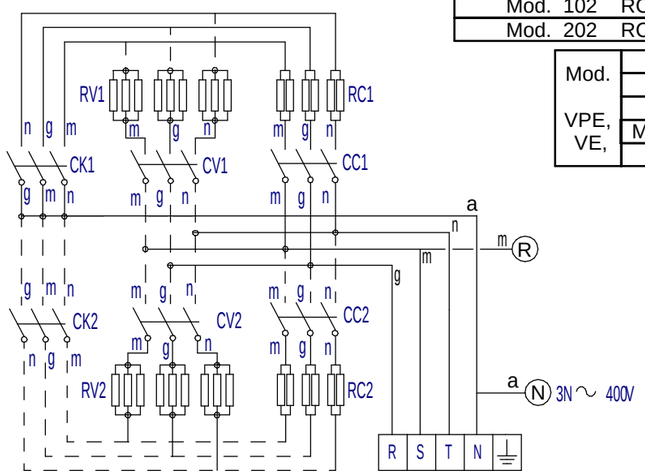

3 ~ 230V

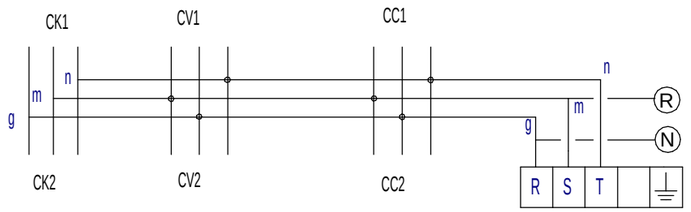

1N ~ 230V

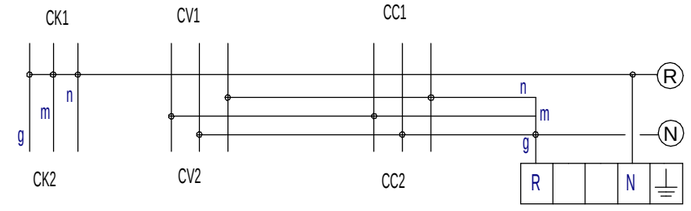

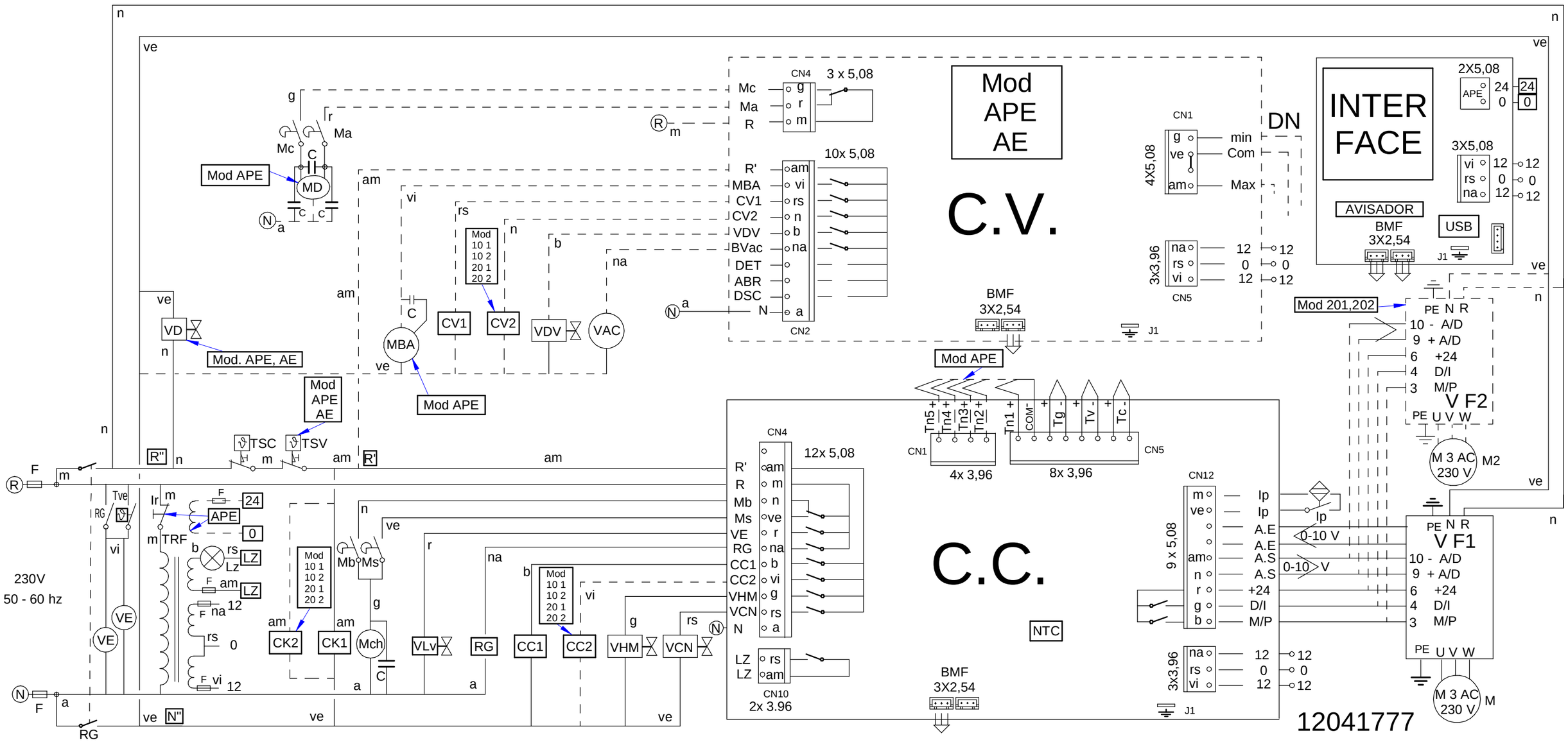

VE 061,101,102 12023862
VE 201,202 12023862

Ms 12025193
Mch 12018443
Mb 12025193
Hanning 12024325
FIR 12024358
12024463
M1
am/ve

VF1 12024329
TSC 12024591 360ºC
TSV 12024884
RG 12024011
12025158 Fusible 10A 12101598

C.V. 12007948
VE, VPE
Mc Ma R
R' MBA CV1 CV2 VDV BVac DET ABR DSC N
min Com Max
12 0 12
BMF

12039496 101
12039497 061
202
RC RC RC
RC 202
15+15 KW 12024349 + 12024359

12023573
12023574
12023575
VE, VPE

201
RC 102
15+15 KW 12024349 + 12024359

12024463
RC 202 15+15 KW
12024349 + 12024359

CC1 CC2 CV2 APE, AE
CK1 CK2 CV1 APE, AE

INTER FACE
EPROM
USB
AVISADOR
VE, COE 12 0 12
VPG 0 24
BMF
am/ve

TSV
Tg
RV 12024752 APE, AE
061 101 201 102
101 201 102
201 102
202
202
TCND TV

Hanning 12024325
FIR 12024358
M2
20X

VF2
12040923
12091129 TRF UL
12040921
Fusible 0,8 A 12101595
Fusible 1 A 12101596
Fusible 2,5 A 12101597

VPE
Tn5+ Tn4+ Tn3+ Tn2+ Tn1+ COM- Tg- Tv- Tc-
C.C.
R' R Mb Ms VE RG CC1 CC2 VHM VCN N
Ip Ip As As +24 D/I M/P
12 0 12
LZ LZ BMF
12007938

Version 200V
12047349
230 0 200 0 m a n a
12017523

Variador de Siemens.
Pulsar [P] paraentrar o salir de los Parmetros.
Nota. Si se modifica algunvalor del nivel Basico, hay que volver a grabar el nivel 3.

P0010 = 1 Para inicio programación. (Nivel Basico)
P0100 = 0 (Valor en KW 50Hz Europa)
P0304 = 230 (Vn V)
P0305 = 1,8 (Inb A)
P0307 = 0,37 (Pn KW)
P0310 = 50 (Fn Hz)
P0311 = 1400 (rpm Nom)
P0700 = 2 (Terminal)
P1000 = 2 (Consigna ADC)
P1080 = 25 (F.min Hz)
P1082 = 50 (F.Max Hz)
P1120 = 5” (Ton “)
P1121 = 5” (Toff “)
P3900 = 1 (Fin de la programación y grabación de datos.)
P0003 =3 (Nivel 3 Experto).
P0005 = 27 (Visualizacion = Corriente de salida)
P0611 = 16000 (Tiempo de activación de sobrecarga Seg.)
P0640 = 150 (Sobrecarga de corriente en %)
P1210 = 6 (Rearranque automático)
P1300 = 2 (Modo Parábola, Ventilador)
P1800 = 16 (F.Base KHz) (Cuanto mas alto: - ruido acústico)
P2000 = 55 (F.Refencia de la consigna Hz) (H061 = 47)

COPIAR PARAMETROS DESDE EL BOP AL VARIADOR
P0003 = 3
P0010= 30
P0803 = 1

SOLO USAR CUANDO EL BOP SE HA BORRADO
P0802 desde Variador a BOP

		061	101	102	201	20 2	201	10 2	10 1	061
		A E		A P E	A E	A C E				
General	1	12043785	12041848		12041729	12043770		12043773		12043788
General UL	1	12098154	12098171							
FUERZA	2		12009443	12008538	12041830	12043793	12009306		12009302	
FUERZA UL	2		12098246	12098251						
CC,CV,CK		12024040		12041014	12043505		12041014		12024040	
Resist	4	12043785	12041911	12009450	12041781	12041804	12043797	12043807	12009626	12043800	12043788
Resist UL	4		12098258	12098261						
BMF	7	12023696								
Lz	10	12024569			12024575			12024569		
Lav (APE)	11			12040567						
Rst (APE)	12			12008976		-				
TFT (APE)	13			12009257						
USB (APE)	14			12023775						
Ventilador	15	12130535			12130541			12130535		
Esquema	-	12041777 (Mod. 200V 12047334) (Mod 400V sin Neutro 12093105) (12098475 UL)								
Leyenda	-	12022177								
Ind.Comp	-	12022160								

3 200... 230 V
am /ve n m g
R S T

1N 200... 230 V
am /ve g m n N
g m n R

PRENSAESTOPAS
PG29 101,102, 201, 12009851
PG36 202 12025025

Mod AE, APE
VAc
12039546
12040567
12009059
12025135
Mc 12025193
Md 2024754
Ma 2025193
Mod APE
12024782 50Hz
12024787 60Hz
APE 201 202
12017826 50/60 Hz
APE 061, 101, 102
Mod ACE
12025161
VCN 3 l/min Berdea 12024083
VHM 0.25l/min Gorria 12024509
VDV 8l/min Urdina 12024045
VLV
VD
12023794
Tornillo M6x15 LATON Q013042
Cable masa
Tuerca M6 LATON Q163040
12041895
VE 061,101,102 12023862
VE 201,202 12014105
12024560 Ip
Lz 12024545 12025123
Mod 20x
12024064
12023647
12023927
VPE
T723010000 ?

APARATO / APPLIANCE	HORNOS / OVENS	ZONA / ZONE	KIT BARCO / SHIP KIT	PLANO DRAWING	

ITEM	CODIGO REFERENCE	DENOMINACION	DENOMINATION	ACE-061	AE-061	APE-061	ACE-101	AE-101	APE-101			ELIMINADO ELIMINATED	INTRODUCID. INTRODUCED	NOTAS
	12017293	TRANSFORMADOR 400/230 V, 2	TRANSFORMER 400/230 V, 2	1	1	1	1	1	1					
	12095128	CHAPA TRANSFO. BARCO	SHIP TRANSFORMER SHEET	1	1	1	1	1	1					
	12022528	GUIA CONTACTOR L-73	CONTACTOR GUIDE L-73	1	1	1	1	1	1					
	12127889	VARIADOR 400V 50/60Hz 1,10KW U	VARIATOR 400V 50/60Hz 1,10KW U	1	1	1	1	1	1					
	12023549	CABLEADO REGL-CONTFE-6-7-8-9	SOCKET-CONTFE 6-7-8-9 WIRING	1	1	1	1	1	1					
	12009522	CABLEADO 400V SIN NEUTRO	400V WITHOUT NEUTRAL WIRING	1	1	1	1	1	1					
	12093105	ESQ. TEORICO APE, AE 400V S/N	TEORICAL SCHEME 400V N/NEUT	1	1	1	1	1	1					
	12095209	HOJA INFO TRANSFORM. 400V. S/N	INFO. SHEET TRANSF 400V N/NEU	1	1	1	1	1	1					
	12004270	PLANO DE MONTAJE	ASSEMBLY DRAWING	1	1	1	1	1	1					

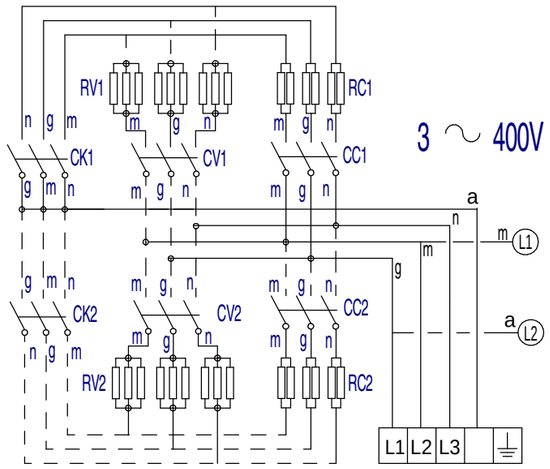

Mod. 101	RC2=3x3KW
Mod. 201	RC2=3x6KW
Mod. 102	RC2=3x5KW
Mod. 202	RC2=6x5KW

Mod. 061, 101	RC1=3x3KW
Mod. 201	RC1=3x6KW
Mod. 102	RC1=3x5KW
Mod. 202	RC1=6x5KW

Mod. VPE, VE,	Mod. 061, 101	RV1=3x3KW
	Mod. 201, 102	RV1=6x3KW
	Mod. 202	RV1=9x3KW
	Mod. 101, 102, 201	RV2=3x3KW
	Mod. 202	RV2=9x3KW

APE 06 1, APE 10 1, APE 10 2, APE 20 1, APE 20 2
AE 06 1, AE 10 1, AE 10 2, AE 20 1, AE 20 2
ACE 06 1, ACE 10 1, ACE 10 2, ACE 20 1, ACE 20 2

400 V sin Neutro

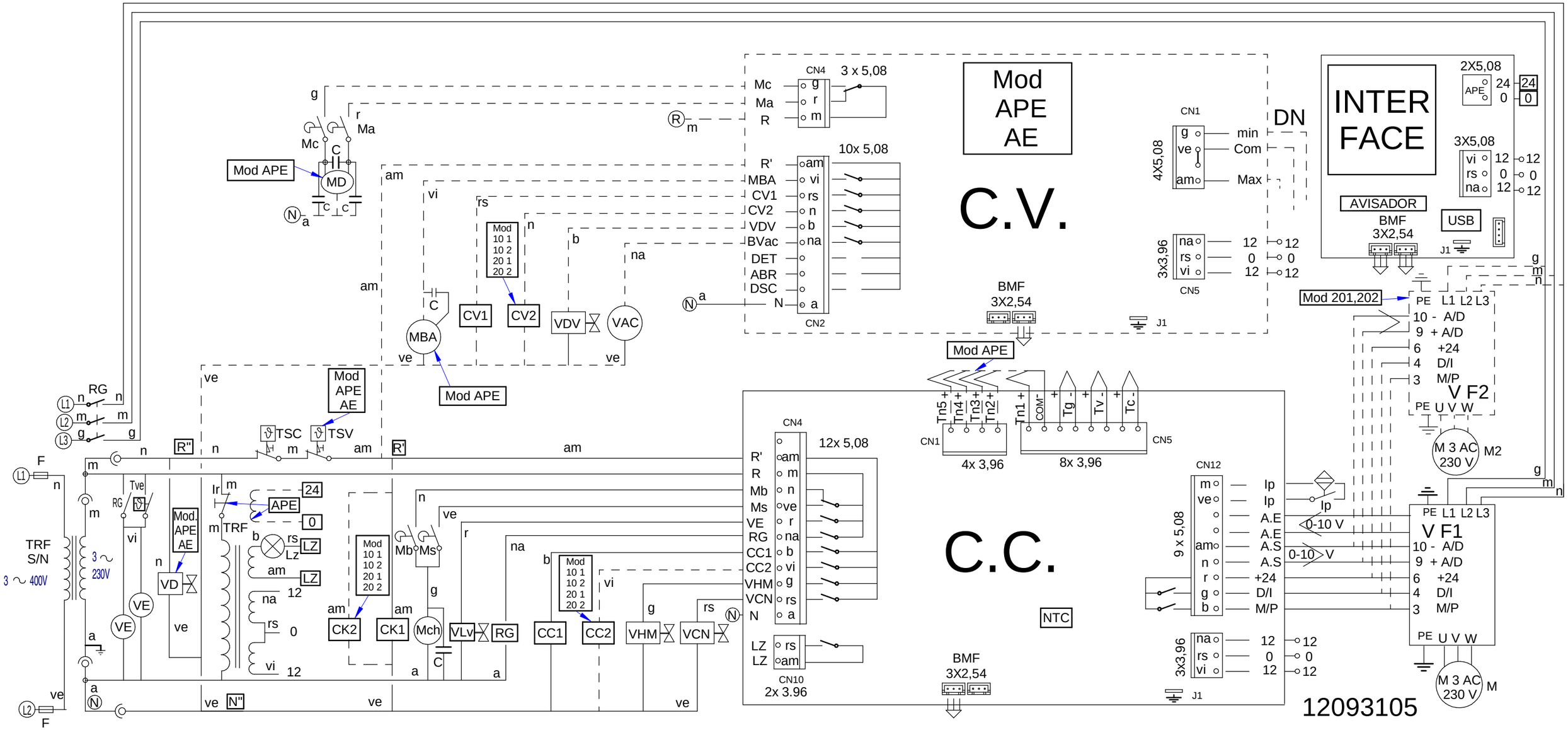

KIT 400V SIN NEUTRO
HORNOS ELECTRICOS
400V KIT, WITHOUT NEUTRAL
ELECTRIC OVENS

12004270

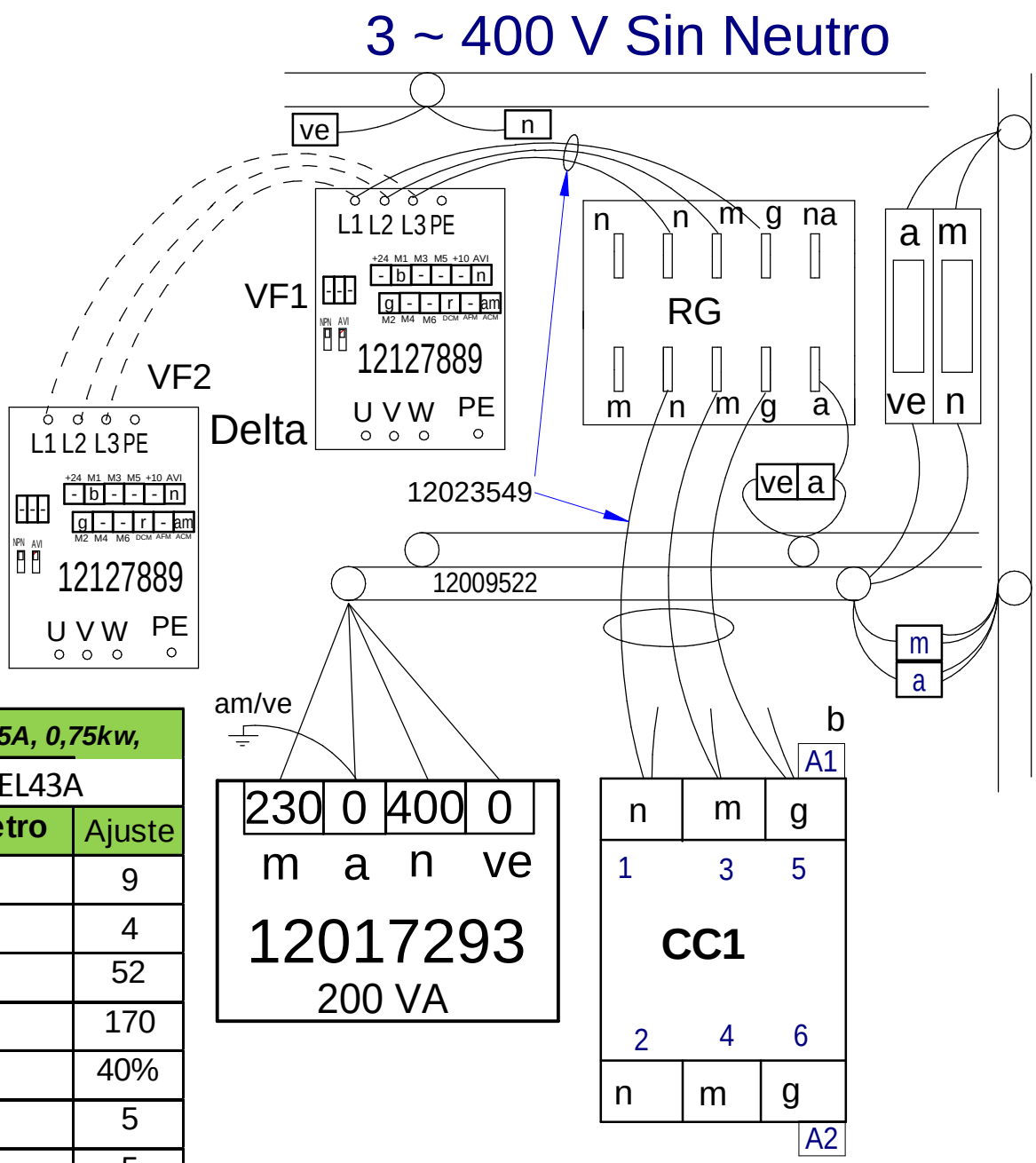

400V, 2,5A, 0,75kw,	
VFD007EL43A	
Parámetro	Ajuste
00.02	9
00.04	4
01-00	52
01-02	170
01-08	40%
01-09	5
01-10	5
02.03	12
02.05	2
04.04	1
06-02	100%
06-06	1
08.15	3

Esquema Electrico 12093105

Nota: El cable azul que va a CK1, conectarlo a CV1 junto al cable gris.

Note: The blue wire that going to CK1, Connect to CV1 with gray wire together.

	ESPAÑOL	ENGLISH	FRANÇAIS	ITALIANO	DEUTSCH
BEC	Bujía Encendido Cámara	Chamber Spark Plug	Bougie Allumage Chambre	Candela di Accensione Camera	Zündkerze Einschalten Garraum
BEV	Bujía Encendido Caldera	Boiler Spark Plug	Bougie Allumage Chaudière	Candela di Accensione Caldaia	Zündkerze Einschalten Boile
C.C.	Control Camara	Chamber Control	Contrôle Chambre	Controllo Camera	Steuerung Garraum
C.E.C	Control Combustión Cámara	Chamber Combustion Control	Contrôle Combustion Chambre	Controllo Combustione Camera	Steuerung Verbrennung Garraum
C.E.V	Control Combustión Caldera	Boiler Combustion Control	Contrôle Combustion Chaudière	Controllo Combustione Caldaia	Steuerung Verbrennung Boiler
C.G.	Control Gas	Control Gas	Contrôle Gaz	Controlli il gas	Steuern Sie Gas
C.V.	Control Caldera	Boiler Control	Contrôle Chaudière	Controllo Caldaia	Steuerung Boiler
CC1, CC2	Contactor Resistencia Cámara	Chamber Heating Element Contactor	Contacteur Élément Chauffant Chambre	Contattore Resistenza Camera	Schütz Heizwiderstand Garraum
CK1, CK2	Contactor General Calentamiento	Heating Element Relay	Relais Élément Chauffant	Relè Resistenza	Relais Heizwiderstand
CV1, CV2	Contactor Resistencias Caldera	Boiler Heating Element Contactor	Contacteur Élément Chauffant Chaudière	Contattore Resistenza Caldaia	Schütz Heizwiderstand Boiler
DEC	Detector Llama Cámara	Chamber Flame Detector	Détecteur Flamme Chambre	Rilevatore di Fiamma Camera	Flammendetektor Garraum
DEV	Detector Llama Caldera	Boiler Flame Detector	Détecteur Flamme Chaudière	Rilevatore di Fiamma Caldaia	Flammendetektor Boiler
DN	Detector Nivel Caldera	Boiler Level Detector	Détecteur Niveau Chaudière	Rilevatore Livello Caldaia	Pegeldetektor Boiler
E1, E2, E3	Encendedor, generador de chispa	Spark generator	Générateur d'étincelles	Generatore di scintille	Funkengenerator
F,F1,F2,F3,F4,F	Fusibles	Fuses	Fusibles	Fusibili	Sicherungen
FI	Filtro Interferencias	Interference Filter	Filtre Interférences	Filtro Interferenze	Störungsfilter
FM	Térmico Motor	Thermal Engine	Thermique Moteur	Termico Motore	Thermoschalter Motor
GV1, GV2	Electro válvula Gas Cámara	Chamber Gas Solenoid Valve	Électrovanne Gaz Chambre	Elettrovalvola Gas Camera	Elektroventil Gas Garraum
GV3, GV4	Electro válvula Gas Caldera	Boiler Gas Solenoid Valve	Électrovanne Gaz Chaudière	Elettrovalvola Gas Caldaia	Elektroventil Gas Boiler
Ip	Interruptor Seguridad Puerta	Door Safety Switch	Interrupteur Sécurité Porte	Iterruttore Sicurezza Porta	Sicherheitsschalter Tür
Lz	Luz Interior	Inner Light	Éclairage Intérieur	Luce Interna	Innenbeleuchtung
M, M2	Motor Turbina	Turbine Engine	Moteur Turbine	Motore Turbina	Motor Turbine
Ma	Interruptor Micro Abierto	Open Microswitch	Microrupteur Ouvert	Iterruttore Micro Aperto	Mikroschalter Geöffnet
Mb	Interruptor Micro Bajada	Drop Microswitch	Microrupteur Descente	Iterruttore Micro Discesa	Mikroschalter Senken
Mc	Interruptor Micro Cerrado	Closed Microswitch	Microrupteur Fermé	Iterruttore Micro Chiuso	Mikroschalter Geschlossen
Mch	Motor Chimenea	Stack Engine	Moteur Cheminée	Motore Canna	Motor Abluftkamin
MD	Motor Desague	Drain Engine	Moteur évacuation	Motore scolo	Motor Abfluss
Ms	Interruptor Micro Subida	Rise Microswitch	Microrupteur Montée	Iterruttore Micro Salita	Mikroschalter Heben
RC	Resistencias Cámara	Chamber Heating Element	Éléments Chauffants Chambre	Resistenze Camere	Heizwiderstände Garraum
RG	Rele General	Main Relay	Relais Général	Relè principale	Hauptrelais
RV	Resistencias Caldera	Boiler Heating Element	Éléments Chauffants Chaudière	Resistenze Caldaia	Heizwiderstände Boiler
Tc	Sonda Cámara	Chamber Probe	Sonde Chambre	Sonda Camera	Sonde Garraum
TCN	Termostato Condensación	Condensation Thermostat	Thermostat Condensation	Termostato Condensazione	Thermostat Kondensierung
Tg	Sonda Caldera	Boiler Probe	Sonde Chaudière	Sonda Caldaia	Sonde Boiler
Tn	Sonda Núcleo	Core Probe	Sonde Noyau	Sonda Nucleo	Kerntemperaturmessonde
TRF	Transformador	Transformer	Transformateur	Trasformatore	Transformator
TSC	Termostato Seguridad Cámara	Chamber Safety Thermostat	Thermostat Sécurité Chambre	Termostato Sicurezza Camera	Sicherheitsthermostat Garraum
TSV	Termostato Seguridad Caldera	Boiler Safety Thermostat	Thermostat Sécurité Chaudière	Termostato Sicurezza Caldaia	Sicherheitsthermostat Boiler
Tv	Sonda Vapor	Steam Probe	Sonde Vapeur	Sonda Vapore	Sonde Dampf
VAC	Bomba Vaciado	Vacuum Pump	Pompe Vidange	Pompa scarico	Ablasspumpe
MBA	Moto Bomba Aclarado	Rinsing Pump	Pompe Rinçage	Pompa Risciacquo	Pumpe Ausspülen
VC1, VC2	Ventilador Soplante Camara	Blowing Fan	Ventilateur Soufflant	Ventilatore Soffiante	Ventilator Gebläse
VCN	Electro válvula Condensación	Condensation Solenoid Valve	Électrovanne Condensation	Elettrovalvola Condensazione	Elektroventil Kondensierung
VDV	Electro válvula Llenado Caldera	Chamber Filling Solenoid Valve	Électrovanne Remplissage Chaudière	Elettrovalvola di Riempimento Caldaia	Elektroventil Füllung Boiler
VE	Ventilador Cuadro Eléctrico	Fan Switchboard	Ventilateur Tableau Électrique	Ventilatore Quadro Elettrico	Ventilator Elektrotafel
VF1,VF2	Variador de Frecuencia	Speed Variator	Variateur Vitesse	Variatore di Velocità	Geschwindigkeitsregler
VHM	Electro válvula Humidificador	Humidifier Solenoid Valve	Électrovanne Humidificateur	Elettrovalvola Umidificatore	Elektroventil Befeuchtungsvorrichtung
Vv	Ventilador Soplante Caldera	Boiler Blowing Fan	Ventilateur soufflement chaudière	Ventilatore Soffiante caldaia	Durchbrennenventilator zum Dampfkessel
	COLORES	**COLOUR**	**COULEURS**	**COLORE**	**FARBEN**
a / BLU	Azul	Blue	Bleu	Blu	Blau
am / YEL	Amarillo	Yellow	Jaune	Giallo	Gelb
am ve / YEL GRN	Amarillo/verde	Yellow / green	Jaune / vert	Giallo/verde	Gelb/grün
b / WHT	Blanco	White	Blanc	Bianco	Weiß
g / GRY	Gris	Grey	Gris	Grigio	Grau
m / BRN	Marrón	Brown	Marron	Marrone	Braun
n / BLK	Negro	Black	Noir	Nero	Schwarz
na / ORG	Naranja	Orange	Orange	Arancio	Orange
r / RED	Rojo	Red	Rouge	Rosso	Rot
rs / PNK	Rosa	Pink	Rose	Roseo	Rosa
ve / GRN	Verde	Green	Vert	Verde	Grün
vi / PRP	Violeta	Purple	Violet	Viola	Violett
					12022177