KROMO	TABLE KI5710	REV 00
BK10 - BK11		

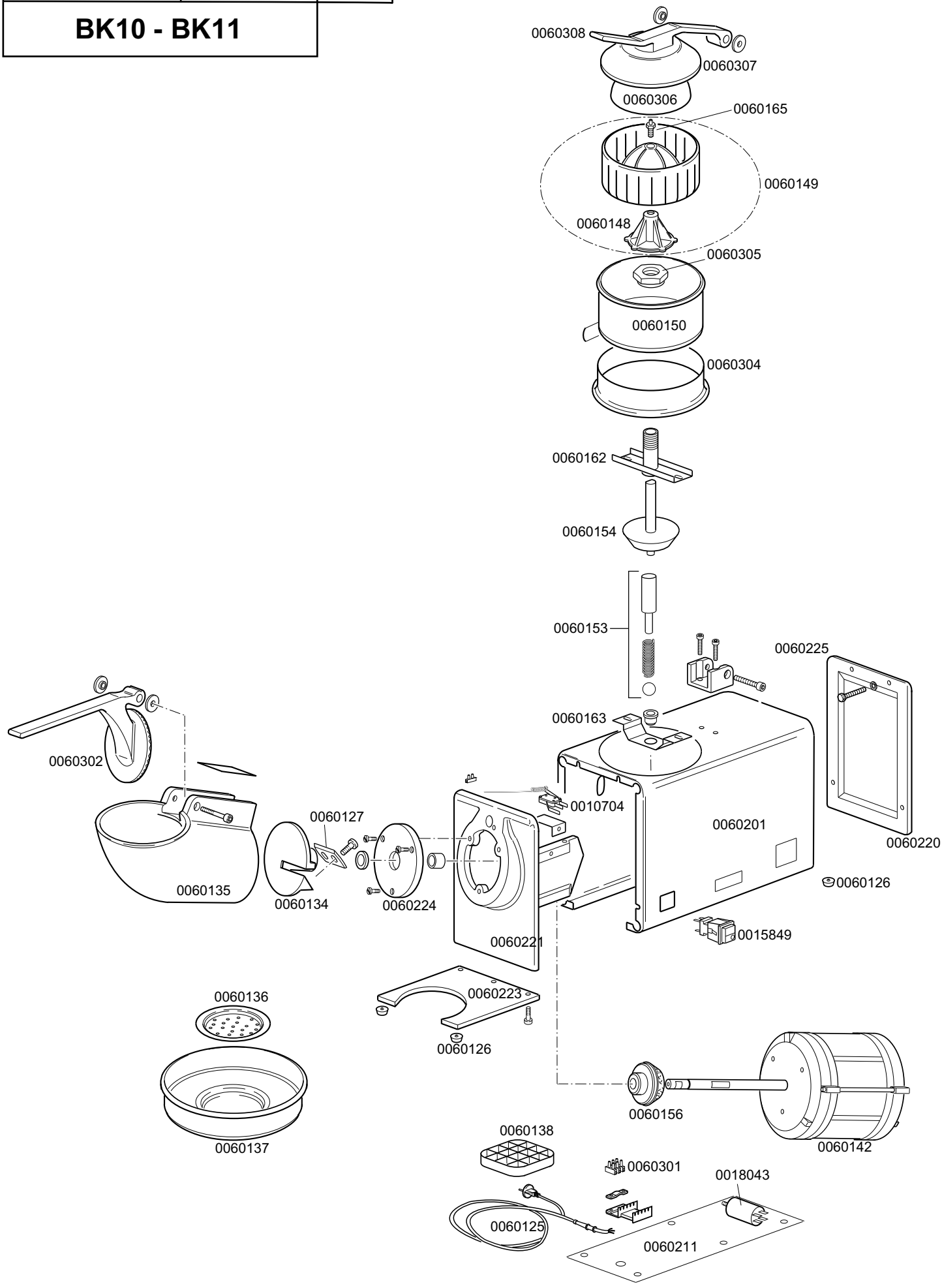

MULTIPLE GROUPS BK10-BK11

TABLE
KI5710

CODE	DESCRIPTION	CODE	DESCRIPTION
0010704	16A door safety microswitch		
0015849	Single switch green push button		
0018043	10 Microfarad condenser		
0060125	Power supply cable		
0060126	Rubber small foot		
0060127	Blade for ice-crusher		
0060134	Blade holder		
0060135	Ice holder		
0060136	Perforated round small grill		
0060137	Ice holder grill		
0060138	Glasses holder		
0060142	Main motor		
0060148	Counter cone		
0060149	Complete cone		
0060150	Fruit-juice squeezer basing		
0060153	Complete press axis spring		
0060154	Aluminium pulley		
0060156	Clutch pulley		
0060162	Axis guide		
0060163	Stand axis		
0060165	Central screw		
0060201	Complete stainless steel chain		
0060211	Small bottom protection		
0060220	End-plated		
0060221	Feedbox holder		
0060223	Base		
0060224	Feedbox support		
0060225	Lever holder		
0060301	PA 27 3 poles terminal board		
0060302	Ice-press handle		
0060304	Basin citrus-fruit squeezer support		
0060305	Nut lock small basin		
0060306	Little bell citrus-fruit squeezer		
0060307	Little bell citrus-fruit squeezer cover		
0060308	Citrus-fruit squeezer handle		