DESPIECE TECNICO

Elementos neutros
Neutral elements
Éléments neutres
Neutrale elemente
Elementi neutri
Elementos neutros

GAMA 700

Modelos:

EN7-05
EN7-10

Junio 2008 June
Revisado Enero 2014 January Revised

FAGOR

FAGOR INDUSTRIAL

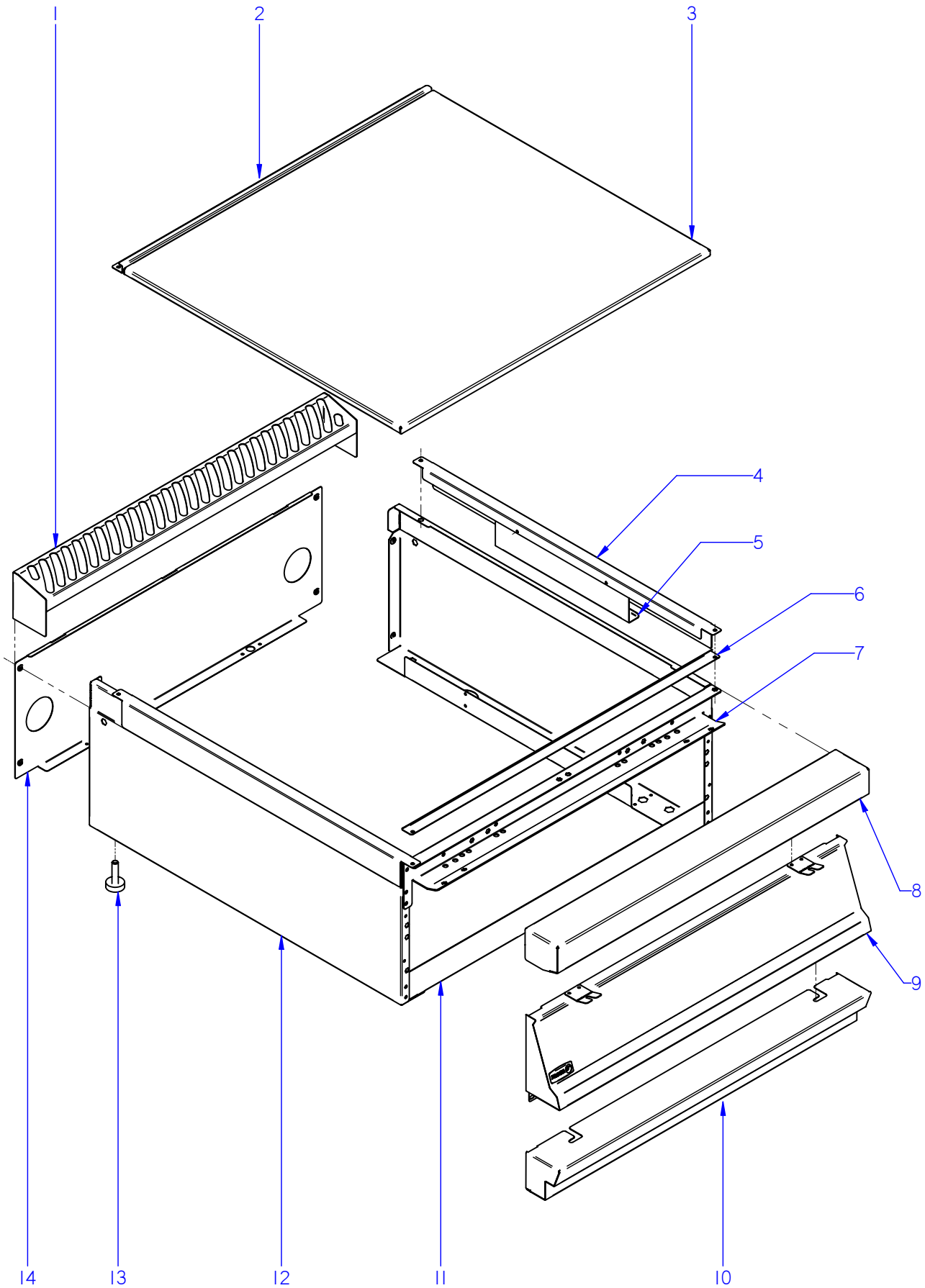

ITEM MARCADO EN COLOR = REPUESTO RECOMENDADO
COLOURED ITEM = RECOMMENDED SPARE PART

N plano	Firma	Fecha	Aparato	MUEBLE	Lamina	
C-2103		2008-06	ELEMENTO NEUTRO GAMA 700		1	Fagor Industrial S.Coop. FAGOR Oñate

MOD.	ELEMENTO NEUTRO	ZONA	MUEBLE	PLANO	C-2103

ITEM	CODIGO	DENOMINACION	TEXTO	EN7-05	EN7-10						NOTAS
1	H125404000	EMBELLECEDOR POSTER. 1/2 M	REAR TRIM. 1/2 M	1	_						
1	S565401000	EMBELLECEDOR POSTERIOR 1M	REAR TRIM 1M	_	1						
2	H602813000	ESCUADRA SOP. EMBELLECEDOR	SUPP. BRACKET TRIM	1	_						
2	H602815000	ESCUADRA SOP. EMBELLECEDOR	SUPP. BRACKET TRIM	_	1						
	Q012031000	TORNILLO EXAGONAL M5x10 A304	HEXAGONAL BOLT M5x10 A304	2	2						
3	H605405000	TAPA COMPLETA EN7-05 Q	COMPLETE COVER EN7-05 Q	1	_						ELIMINADO 27.09.2013
3	12095696	KIT TAPA MESA EN-705	TABLE TOP EN-705 KIT	_	1						INTRODUCIDO 27.09.2013
3	H605409000	TAPA COMPLETA EN7-10 Q	COMPLETE COVER EN7-10 Q	_	1						
4	R905404000	LISTON LATERAL	SIDE STRIP	2	2						
5	R792605000	TIRANTE LATERAL	SIDE TIE ROD	2	2						
	Q419005000	REMACHE 4x8 ALMG3 / ALUMINIO	RIVET 4X8 ALMG3 / ALUMINIUM	4	4						
6	H602605000	LIST. SOPORTE ANTER. MESA1/2 M	FRONT SUPPORT STRIP TABLE	1	_						
6	H602606000	LIST. SOPORTE ANTER. MESA1M	FRONT SUPPORT STRIP TABLE	_	1						
	Q012031000	TORNILLO EXAGONAL M5x10 A304	HEXAGONAL BOLT M5x10 A304	2	2						
	Q302022000	ARANDELA 16x6x1,2 A304	WASHER 16x6x1.2 A304	2	2						
7	H602602000	ESCUADRA AMARRE ANTER. 1/2 M	FRONT FASTENING BRACKET 1	1	_						
7	H602603000	ESCUADRA AMARRE ANTERIOR 1 M	FRONT BRACKET FASTENING 1	_	1						
	Q012031000	TORNILLO EXAGONAL M5x10 A304	HEXAGONAL BOLT M5x10 A304	6	6						
	Q221342000	REMACHE EXAGONAL M5	HEXAGONAL RIVET M5	6	6						
8	H125403000	ANTERIOR MESA 1/2 M G-700	FRONT BENCH 1/2M G-700	1	_						
8	H125409000	ANTERIOR MESA 1M G-700	FRONT BENCH 1M G-700	_	1						
	Q152004000	TORNILLO APLASTADO M5x13 A304	FLAT HEADED BOLT M5x13 A30	2	2						
	Q302022000	ARANDELA 16x6x1,2 A304	WASHER 16x6x1.2 A304	2	2						
9	H602805000	PANEL PORTAMANDOS EN7-05 Q	CONTROL HOLDER PANEL EN7	1	_						
9	H602810000	PANEL PORTAMANDOS EN7-10 Q	CONTROL HOLDER PANEL EN7	_	1						
	Q152004000	TORNIL. APLASTADO M5X13 A 304	FLAT HEADED SCREW M5x13 A	4	4						
	Q221343000	REMACHE EXAGONAL M6	HEXAGONAL RIVET M6	2	2						
	U912805000	ESCUDO FAGOR G700	FAGOR EMBLEM G700	1	1						
	Q221023000	CLIP SUJECIÓN RÁPIDA Ø5	RAPID CONNECT CLIP Ø5	2	2						

MOD.	ELEMENTO NEUTRO	ZONA	MUEBLE	PLANO	C-2103

ITEM	CODIGO	DENOMINACION	TEXTO	EN7-05	EN7-10						NOTAS
10	H602803000	ZOCALO 7-05 Q	SKIRTING 7-05 Q	1	_						
10	H602816000	ZOCALO 7-10 Q	SKIRTING 7-10 Q	_	1						
	Q151336000	TORNILLO SOPORTE GUIAS	GUIDE SUPPORT BOLT	2	2						
	Q012031000	TORNILLO EXAGONAL M5x10 A304	HEXAGONAL BOLT M5x10 A304	2	2						
	Q302022000	ARANDELA 16x6x1,2 A304	WASHER 16x6x1.2 A304	2	2						
11	H602601000	TIRANTE INFERIOR	LOWER TIE ROD	1	_						
11	H602604000	TIRANTE INFERIOR	LOWER TIE ROD	_	1						
	Q221342000	REMACHE EXAGONAL M5	HEXAGONAL RIVET M5	2	2						
12	H122801000	PANEL LATERAL SUP. IZDO. G700	LEFT UPPER SIDE PANEL G700	1	1						
	Q221342000	REMACHE EXAGONAL M5	HEXAGONAL RIVET M5	5	5						
	Q221343000	REMACHE EXAGONAL M6	HEXAGONAL RIVET M6	5	5						
	X010503000	CIERRE MUELLE	LOCK SPRING	1	1						
	Q221343000	REMACHE EXAGONAL M6	HEXAGONAL RIVET M6	5	5						
S/Nº	H122802000	PANEL LATERAL SUP. DCHO. G700	RIGHT SUP. SIDE PANEL G700	1	1						
	Q221342000	REMACHE EXAGONAL M5	HEXAGONAL RIVET M5	5	5						
	Q221343000	REMACHE EXAGONAL M6	HEXAGONAL RIVET M6	5	5						
	X010503000	CIERRE MUELLE	LOCK SPRING	1	1						
13	Z200107000	PATA REGULABLE	ADJUSTABLE LEG	4	4						
	Q221345000	REMACHE EXAGONAL M10	HEXAGONAL RIVET M10	4	4						
14	H602804000	PANEL POSTERI. SUP. G700 1/2M	SUP. REAR PANEL G700 1/2M	1	_						
14	H602808000	PANEL POSTERIOR SUP. G700 1M	SUP REAR PANEL G700 1M	_	1						
	Q419005000	REMACHE 4X8 ALMG3 / ALUMINIO	RIVET 4X8 ALMG3 / ALUMINIUM	4	4						
	X010503000	CIERRE MUELLE	LOCK SPRING	3	3						
	Q419007000	REMACHE TUBULAR C/V D3.2X6	TUBULAR RIVET C/V D3.2X6	6	6						