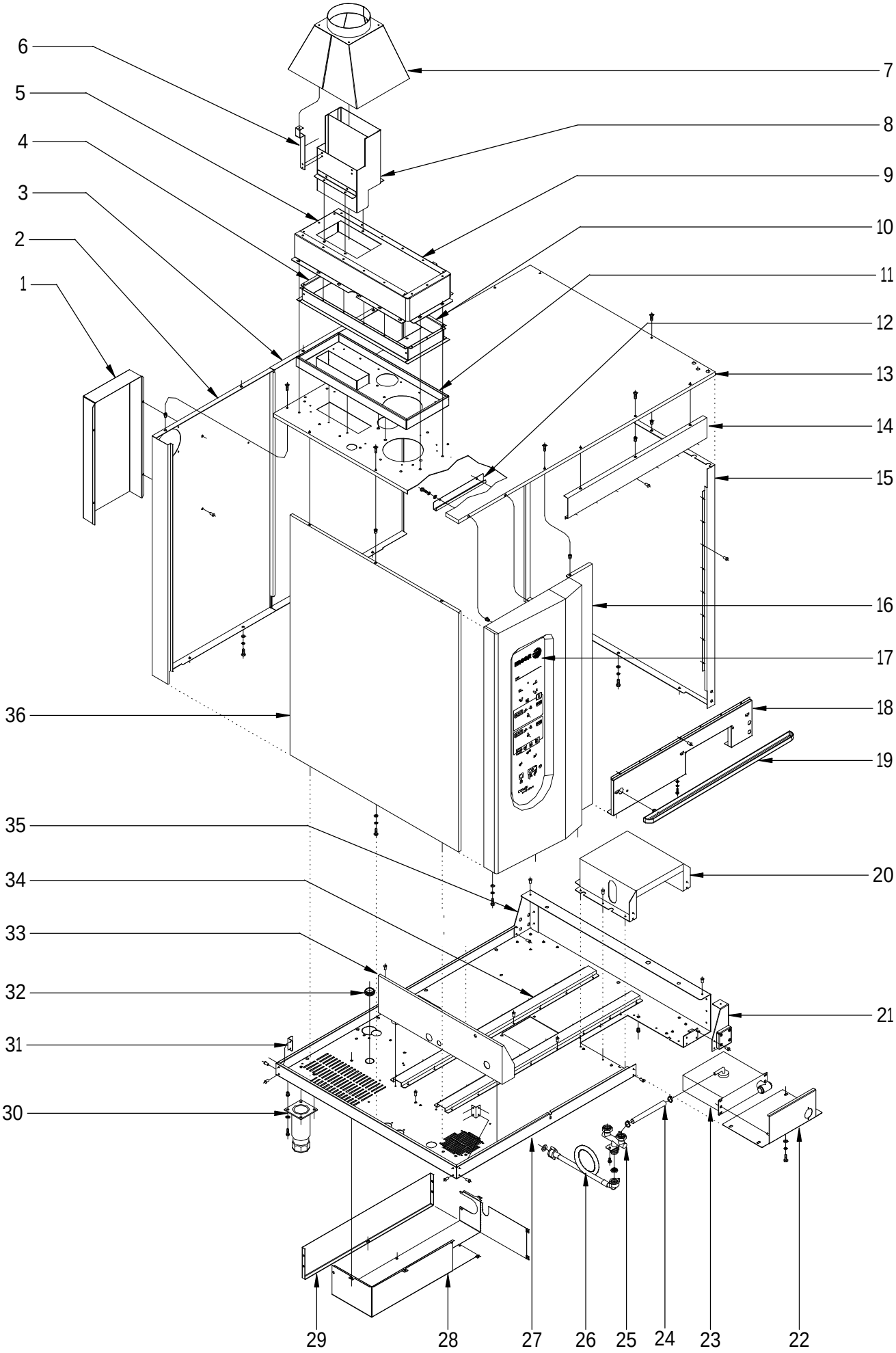

N plano	Firma	Fecha	Aparato	MUEBLE	Lamina	
C-2020		2008-04	HORNO HGP-10/21		1	Fagor Industrial S.Coop. FAGOR Oñate

MOD.	HORNOS	ZONA	MUEBLE	PLANO	C-2020

ITEM	CODIGO	DENOMINACION	TEXTO	HGP-10/21							NOTAS
1	T452814000	CHAPA SEPARACION IPX5 20/21	SEPARATION PLATE IPX5 20/21	1							
	Q412002000	REMACHE AVINOX Ø4x10mm	RIVET AVINOX Ø4x10mm	2							
2	T362803000	PANEL POST EXT GAS 10/21	REAR PANEL EXT. GAS 10/21	1							
3	T302850000	PANEL POST EXT COMUN 10/21	REAR PANEL EXT. COMMON 10/2	1							
4	T302825000	POSTERIOR DE CAMARA COLECT.	REAR OF MANIFOLD CHAMBER	2							
	Q222011000	REMACHE EXAGONAL M5	HEXAGONAL RIVET M5	4							
	Q153131000	TORNILLO CABEZA APLASTADA	FLAT HEADED BOLT	4							
5	T302823000	POSTERIOR DE COLECTOR	MANIFOLD REAR SECTION	1							
	Q412002000	REMACHE TUBULAR Ø4x7.5	TUBULAR RIVET Ø4x7.5	12							
6	T112815000	SOPORTE DE CHIMENEA	CHIMNEY SUPPORT	4							
	Q221342000	REMACHE EXAGONAL M5	HEXAGONAL RIVET M5	8							
	Q152004000	TORNILLO APLASTADO M5x13	FLAT HEAD SCREW M5X13	8							
7	T122820000	CHIMENEA EXTERIOR COMPLETA	COMPLETE EXTERIOR FLUEPIPE	1							
8	T122816000	SALIDA DE COLECTOR COMPL.	COMPL. MANIFOLD OUTPUT	1							
9	T302822000	ANTERIOR DE COLECTOR	MANIFOLD FRONT SECTION	1							
	Q412002000	REMACHE TUBULAR Ø4x7.5	TUBULAR RIVET Ø4x7.5	6							
10	T302824000	LATERAL CAMARA COLECTOR	SIDE MANIFOLD CHAMBER	2							
	Q222011000	REMACHE EXAGONAL M5	HEXAGONAL RIVET M5	12							
	Q153131000	TORNILLO CABEZA APLASTADA	FLAT HEADED BOLT	12							
11	T302820000	BANDEJA DE COLECTOR COMPL.	COMPL. MANIFOLD TRAY	1							
	Q412002000	REMACHE TUBULAR Ø4x7.5	TUBULAR RIVET Ø4x7.5	15							
12	T302834000	CANALETA PORTAMANDOS	CONTROL HOLDER PIPE	1							
	Q412005000	REMACHE TUBULAR 3.3X8.7	TUBULAR RIVET 3.3 X 8.7	30							
13	T302807000	PANEL SUPERIOR EXTERIOR	EXTERIOR UPPER PANEL	1							
	Q221342000	REMACHE EXAGONAL M5	HEXAGONAL RIVET M5	10							
	Q152004000	TORNILLO APLASTADO M5x13	FLAT HEAD SCREW M5X13	10							
14	T302804000	PANEL ANTERIOR SUPERIOR	UPPER FRONT PANEL	1							
15	T302803000	PANEL EXTERIOR DCHO. 10/21	RIGHT EXT. PANEL 10/21	1							
16	T302808000	PANEL PORTAMANDOS 10/21	CONTROL HOLDER PANEL 10/21	1							
17	T363001000	SERIGRAFIA HGP-10-11 10-21	SERIGRAPHY HGP-10-11 10-21	1							

MOD.	HORNOS	ZONA	MUEBLE	PLANO	C-2020

ITEM	CODIGO	DENOMINACION	TEXTO	HGP-10/21							NOTAS
18	T302854000	PANEL FRONTAL INFERIOR	LOWER FRONT PANEL	1							
	Q242030000	ARANDELA ABANICO A5 A.304	FAN WASHER A5 A.304	2							
	Q213131000	TUERCA SOMBRERETE M5	COWL NUT M5	2							
19	T302853000	RECOGEAGUAS DE PLASTICO	PLASTIC WATER COLLECTOR	1							
20	T302830000	ALOJAMIENTO DUCHA	SHOWER HOUSING	1							
21	T302836000	REFUERZO APOYO BASE COMPL.	COMPL. BASE SUPPORT REINFC	1							
22	T322818000	CHAPA AMARRE DUCHA	SHOWER FASTENING PLATE	1							
	Q152004000	TORNILLO APLASTADO M5x13	FLAT HEAD SCREW M5X13	4							
	Q221343000	REMACHE EXAGONAL M6	HEXAGONAL RIVET M6	4							
	Q232040000	ARANDELA A6	WASHER A6	4							
	Q262040000	ARANDELA GROW. A6 A.304	WASHER GROW. A6 A.304	4							
	Q012042000	TORNILLO EXAGONAL M6X15	HEXAGONAL BOLT M6x15	4							
23	T452809000	DUCHA	SHOWER	1							
	Q221342000	REMACHE EXAGONAL M5	HEXAGONAL RIVET M5	4							
24	3676900000	TUBO GOMA NEGRA 17*10	BLACK RUBBER PIPE 17*10	1							
	Q901310000	ABRAZADERA ELAST. 16.8-17.7	ELAST. CLAMP 16.8-17.7	2							
25	T325063000	ENTRADA AGUA COMPLETA	COMPLETE WATER INLET	1							
	Q012021000	TORNILLO EXAGONAL M4X10	HEXAGONAL BOLT M4x10	2							
26	Z601114000	MANGUERA ENTRADA AGUA	WATER INTAKE HOSE	1							
	Z701132000	FILTRO DE JUNTA N-3	SEAL FILTER N-3	1							
	Q307031000	JUNTA TUBO 14X24X3	PIPE GASKET 14X24X3	2							
27	T302852000	BASE EXTERIOR 10/21 GV GP	EXTERIOR BASE 10/21 GV GP	1							
S/Nº	T332806000	TAPA INFERIOR BASE LAVADO	LOWER COVER WASHING BASE	1							
	Q012032000	TORNILLO EXAGONAL M5x15	HEXAGONAL BOLT M5x15	4							
	Q242030000	ARANDELA ABANICO A5 A.304	FAN WASHER A5 A.304	4							
	Q221342000	REMACHE EXAGONAL M5	HEXAGONAL RIVET M5	4							
28	T360709000	CAJA CUBRE SISTEMA LAVADO	CLEANING SYSTEM BOX	1							
	Q012032000	TORNILLO EXAGONAL M5x15	HEXAGONAL BOLT M5x15	3							
	Q242030000	ARANDELA ABANICO A5 A.304	FAN WASHER A5 A.304	3							
	Q221342000	REMACHE EXAGONAL M5	HEXAGONAL RIVET M5	3							
29	T360720000	TAPA CAJA CUBRE SIST LAVADO	COVER WASHING SYSTEM BOX	1							

MOD.	HORNOS	ZONA	MUEBLE	PLANO	C-2020

ITEM	CODIGO	DENOMINACION	TEXTO	HGP-10/21							NOTAS
30	X260151000	PATA REGULABLE	ADJUSTABLE LEG	4							
	Q221342000	REMACHE EXAGONAL M5	HEXAGONAL RIVET M5	16							
	Q242030000	ARANDELA ABAN. A5 A.304	FAN WASHER. A5 A.304	16							
	Q012031000	TORNILLO EXAGONAL M5x10	HEXAGONAL BOLT M5x10	16							
31	T302837000	CANTONERA BASE	PROTECTOR BASE	4							
32	X723014000	PASAMUROS Ø 30	WALL BUSHING Ø 30	1							
33	T322808000	APOYO CUERPO HORNO	OVEN BODY SUPPORT	1							
34	T302818000	REFUERZO LONGITUDINAL BASE	REINFORCEMENT LONGITUDINA	2							
35	T302816000	REFUERZO APOYO BASE POSTE.	REAR BASE SUPPORT REINFOR	1							
36	T302806000	PANEL EXTERIOR IZQUIERDO	LEFT EXTERIOR PANEL	1							
	Q221343000	REMACHE EXAGONAL M6	HEXAGONAL RIVET M6	14							
	Q232040000	ARANDELA A6	WASHER A6	14							
	Q262040000	ARANDELA GROW. A6 A.304	WASHER GROW. A6 A.304	14							
	Q012042000	TORNILLO EXAGONAL M6x15	HEXAGONAL BOLT M6x15	14							

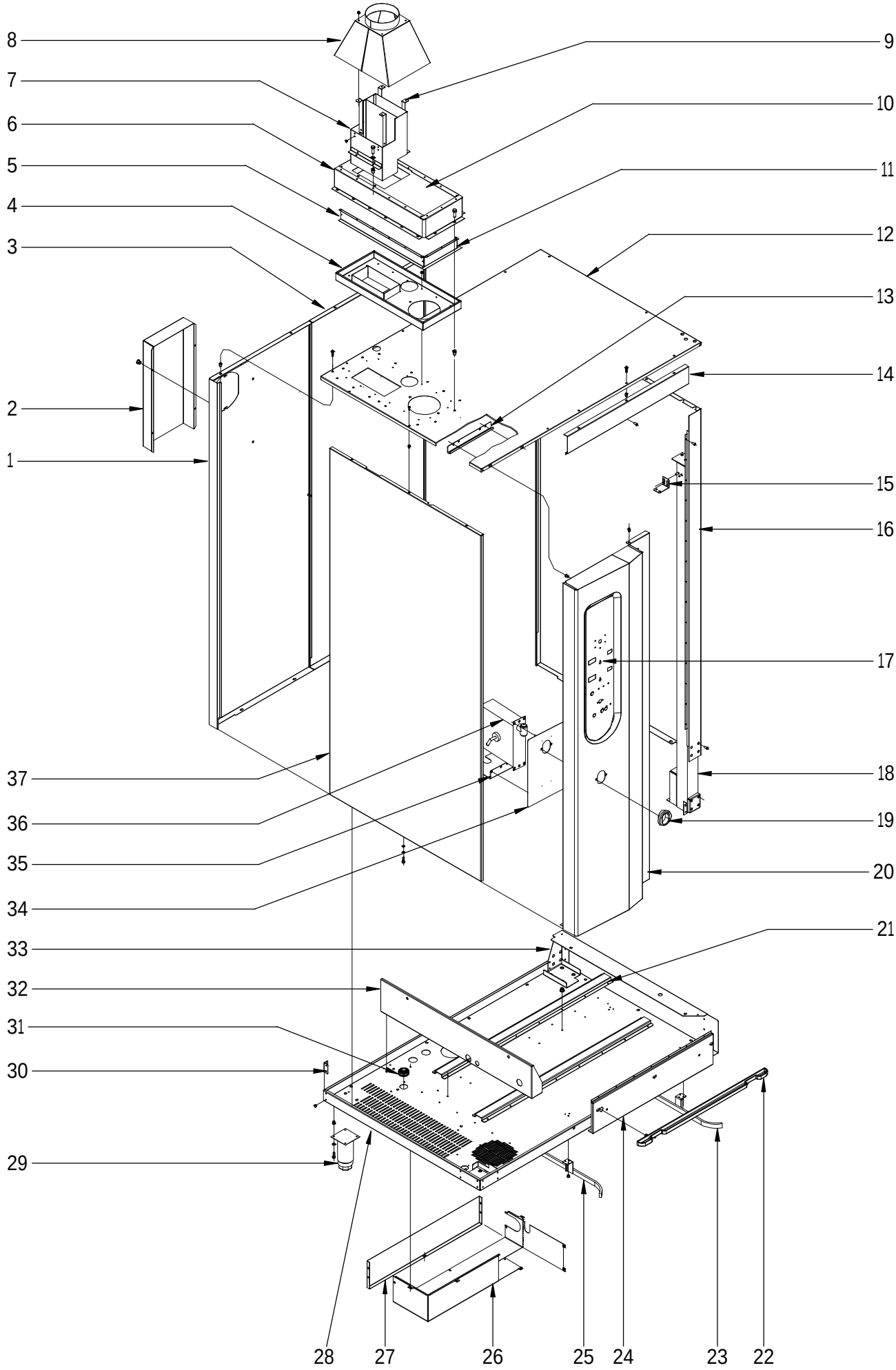

N plano	Firma	Fecha	Aparato	MUEBLE	Lamina	
C-2021		2008-04	HORNO HGP-20/21		2	Fagor Industrial S.Coop. FAGOR Oñate

MOD.	HORNOS	ZONA	MUEBLE	PLANO	C-2021

ITEM	CODIGO	DENOMINACION	TEXTO	HGP 20/21							NOTAS
1	T492847000	PANEL POST. DERECHO HGV-2021	REAR PANEL RIGHT HGV-2021	1							
2	T452814000	CHAPA SEPARACION IPX5 20/21	SEPARATION PLATE IPX5 20/21	1							
3	T492848000	PANEL POST. EXTERIOR IZD. 2021	REAR PANEL LEFT EXTERIOR 2(	1							
4	T492813000	BANDEJA DE COLECTOR 20/21	MANIFOLD TRAY 20/21	1							
	Q412002000	REMACHE AVINOX Ø4x10mm	RIVET AVINOX Ø4x10mm	16							
5	T302824000	LATERAL CAMARA COLECT. HGV	SIDE MANIFOLD CHAMBER HGV	2							
6	T492814000	ANTERIOR DE COLECTOR 2021	MANIFOLD FRONT 2021	1							
7	T142817000	SALIDA COLECTOR HVG-20-21	MANIFOLD OUTPUT HVG-20-21	1							
8	T122820000	CHIMENEA EXTERIOR COMPLETA	COMPLETE EXTERIOR FLUEPIPE	1							
	Q221342000	REMACHE EXAGONAL M5	HEXAGONAL RIVET M5	3							
	Q152004000	TORNIL, APLASTADO M5x13 A304	FLAT HEADED BOLT M5x13 A304	3							
	Q412002000	REMACHE AVINOX Ø4x10mm	RIVET AVINOX Ø4x10mm	12							
9	T112815000	SOPORTE CHIMENEA HVG/HGV	FLUEPIPE SUPPORT HVG/HGV	4							
10	T492815000	POSTERIOR DE COLECTOR 2021	MANIFOLD REAR SECTION 2021	1							
11	T492816000	POSTERIOR CAMARA COLECTOR	REAR MANIFOLD CHAMBER	2							
	Q412002000	REMACHE AVINOX Ø4x10mm	RIVET AVINOX Ø4x10mm	26							
	Q222011000	REMACHE EXAGONAL M.5	HEXAGONAL RIVET M.5	16							
	Q153131000	TORNILLO CABEZA APLASTADA	FLAT HEADED BOLT	16							
12	T492811000	PANEL SUPERIOR EXTERIOR 2021	UPPER EXTERIOR PANEL2021	1							
	Q221342000	REMACHE EXAGONAL M5	HEXAGONAL RIVET M5	13							
	Q152004000	TORNIL, APLASTADO M5x13 A304	FLAT HEADED BOLT M5x13 A304	13							
13	T302834000	CANALETA PORTAMANDOS	CONTROL HOLDER PIPE	1							
	Q412005000	REMACHE TUBULAR 3.3X8.7	TUBULAR RIVET 3.3 X 8.7	4							
14	T302804000	PANEL ANTERIOR SUPERIOR	UPPER FRONT PANEL	1							
	Q221343000	REMACHE EXAGONAL M6	HEXAGONAL RIVET M6	16							
	Q232040000	ARANDELA A6	WASHER A6	16							
	Q262040000	ARAND.GROW. A6 A.304	WASHER GROW. A6 A.304	16							
	Q012042000	TORNILLO EXAGONAL M6x15	HEXAGONAL BOLT M6x15	16							
15	T492825000	ESCUADRA TUBO BISGRA	HINGE PIPE BRACKET	1							
16	T492805000	PANEL EXTERIOR DCHO. 20/21	RIGHT EXT. PANEL 20/21	1							
17	T363001000	SERIGRAFIA HGP-10-11 10-21	SERIGRAPHY HGP-10-11 10-21	1							

MOD.	HORNOS	ZONA	MUEBLE	PLANO	C-2021

ITEM	CODIGO	DENOMINACION	TEXTO	HGP 20/21							NOTAS
18	T492824000	TUBO PORTABISAGRAS	HINGE CARRIER PIPE	1							
19	T452813000	SOPORTE DUCHA	SHOWER SUPPORT	1							
20	T492800000	PANEL PORTAMANDOS COM 20/21	COM CONTROL HOLDER PANEL	1							
	Q412005000	REMACHE AVINOX Ø3,2x6mm	RIVET AVINOX Ø3.2x6mm	44							
21	T302818000	REFUERZO LONGITUDINAL BASE	REINFORCEMENT LONGITUDINA	2							
22	T452830000	RECOGEAGUAS PLASTICO 20-21	PLASTIC WATER COLLECTOR 20	1							
	Q221342000	REMACHE EXAGONAL M5	HEXAGONAL RIVET M5	2							
	Q042022000	TORNILLO AVELLANADO M4X15	COUNTERSUNK BOLT M4x15	2							
23	T492820000	GUIA CARRO COMPLETA DCHA.	COMPLETE RIGHT TROLLEY GUI	1							
24	T492864000	PANEL FRONTAL INFERIOR	LOWER FRONT PANEL	1							
25	T492821000	GUIA CARRO COMPLETA IZDA.	COMPLETE LEFT TROLLEY GUID	1							
	Q412002000	REMACHE AVINOX Ø4x10mm	RIVET AVINOX Ø4x10mm	8							
26	T360709000	CAJA CUBRE SISTEMA LAVADO	CLEANING SYSTEM BOX	1							
	Q012032000	TORNILLO EXAGONAL M5x15	HEXAGONAL BOLT M5x15	3							
	Q242030000	ARANDELA ABANICO A5 A.304	FAN WASHER A5 A.304	3							
	Q221342000	REMACHE EXAGONAL M5	HEXAGONAL RIVET M5	3							
27	T360720000	TAPA CAJA CUBRE SIST LAVADO	COVER WASHING SYSTEM BOX	1							
28	T492861000	BASE COMPLETA HGV 20/21	COMPLETE BASE HGV 20/21	1							
	Q412006000	REMACHE AVINOX Ø4x12mm	RIVET AVINOX Ø4x12mm	8							
S/Nº	T332806000	TAPA INFERIOR BASE LAVADO	LOWER COVER WASHING BASE	1							
	Q012032000	TORNILLO EXAGONAL M5x15	HEXAGONAL BOLT M5x15	4							
	Q242030000	ARANDELA ABANICO A5 A.304	FAN WASHER A5 A.304	4							
	Q221342000	REMACHE EXAGONAL M5	HEXAGONAL RIVET M5	4							
29	R092830000	PATA REF. AA179EOAQ47CCN	LEG REF. AA179EOAQ47CCN	4							
	Q221343000	REMACHE EXAGONAL M6	HEXAGONAL RIVET M6	16							
	Q242040000	ARANDELA ABANICO A6 A.304	FAN WASHER A6 A.304	16							
	Q012042000	TORNILLO EXAGONAL M6x15	HEXAGONAL BOLT M6x15	16							
30	T302837000	CANTONERA BASE 10/21	BASE PROTECTOR 10/21	2							
31	X723014000	PASAMUROS Ø 30	WALL BUSHING Ø 30	1							
32	T322808000	APOYO CUERPO HORNO	OVEN BODY SUPPORT	1							
33	T302816000	REF APOYO BASE POST 10/21	REF SUPPORT REAR BASE 10/21	1							

MOD.	HORNOS	ZONA	MUEBLE	PLANO	C-2021

ITEM	CODIGO	DENOMINACION	TEXTO	HGP 20/21							NOTAS
34	T452812000	CHAPA DUCHA COMPLETA	COMPLETE SHOWER PLATE	1							
35	T492860000	CHAPA DUCHA HGV 20/21	SHOWER PLATE HGV 20/21	1							
36	T452809000	DUCHA	SHOWER	1							
37	T452807000	PANEL EXTERIOR IZDO. E 2021	LEFT EXT. PANEL E2021	1							
	Q221343000	REMACHE EXAGONAL M6	HEXAGONAL RIVET M6	8							
	Q232040000	ARANDELA A6	WASHER A6	8							
	Q262040000	ARAND.GROW. A6 A.304	WASHER GROW. A6 A.304	8							
	Q012042000	TORNILLO EXAGONAL M6x15	HEXAGONAL BOLT M6x15	8							

N.plano
C-2022

Firma

Fecha
2008-04

Aparato
HORNO HGP-10/21

PUERTA

Lamina
3

Fagor Industrial S.Coop.
Onate

FAGOR

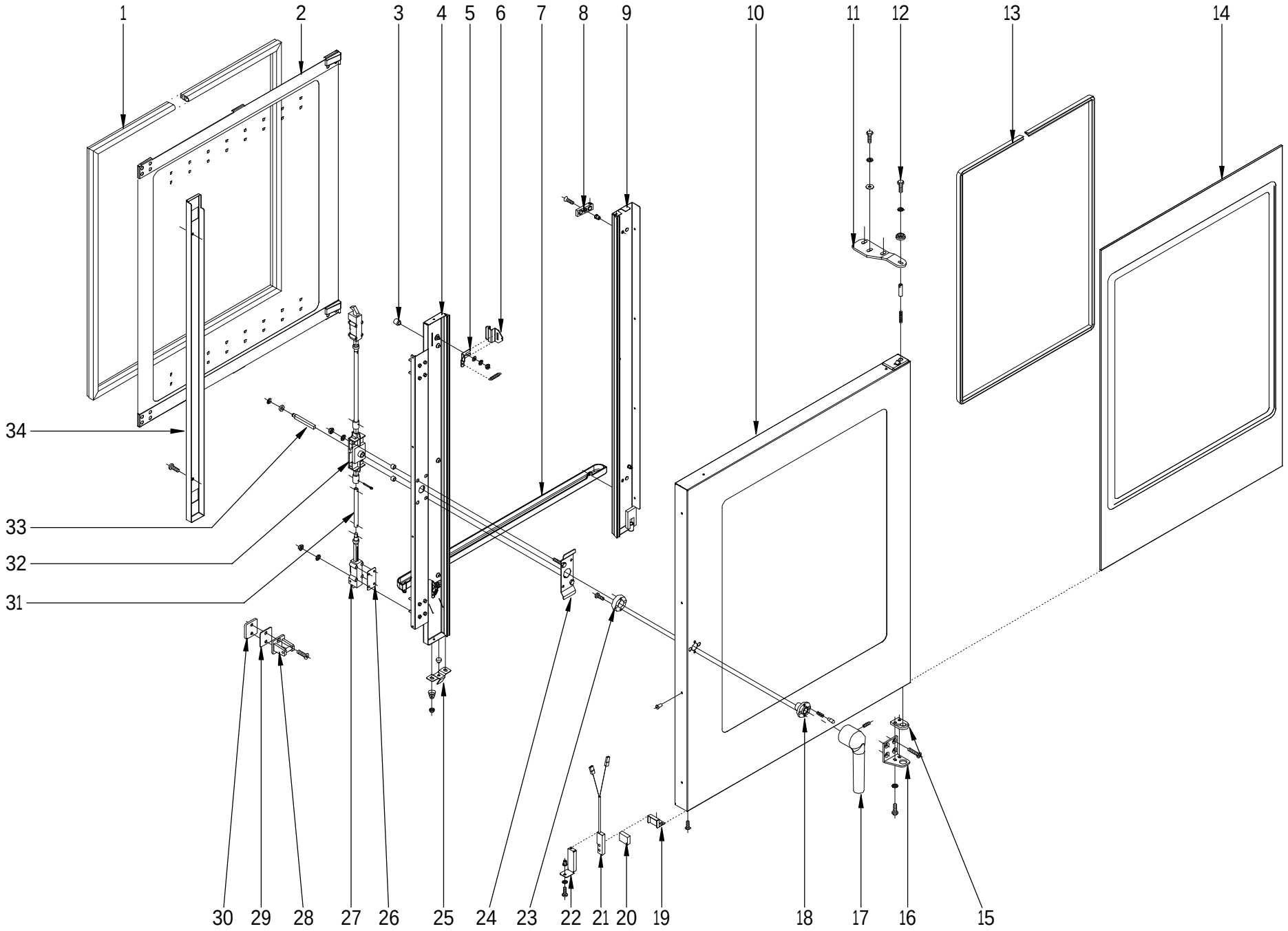

MOD.	HORNOS	ZONA	PUERTA	PLANO	C-2022

ITEM	CODIGO	DENOMINACION	TEXTO	HGP-10/21							NOTAS
	1100003101	**KIT PUERTA COMPLETA**	**COMPLETE DOOR KIT**	**1**							
1	T300500000	JUNTA PUERTA	DOOR SEAL	1							
2	**1100003102**	**KIT KRISTAL INTERIOR COMPLETO**	**COMPLETE INTERIOR GLASS KI**	**1**							
3	T300513000	TOPE CRISTAL INTERIOR	INTERIOR GLASS BUFFER	4							
4	T300554000	CONTRAPUERTA MANILLA 10/21	DOOR REVERSE HANDLE 10/21	1							
5	R670612000	BASE DE PESTILLO	LATCH BASE	2							
	Q302022000	ARANDELA 16X6X1.2 A.304	WASHER 16X6X1.2 A.304	2							
	Q162030000	TUERCA EXAGONAL M5	HEXAGONAL NUT M5	2							
	Q242030000	ARANDELA ABANICO A5 A.304	FAN WASHER A5 A.304	2							
	R660605000	MUELLE TENSOR	TENSIONING SPRING	2							
6	T300514000	PESTILLO 10/21	LATCH 10/21	2							
7	T300556000	RECOGEAGUAS PUERTA	DOOR WATER COLLECTOR	1							
8	R670615000	BASE DE BISAGRA	HINGE BASE	2							
	Q222011000	REMACHE EXAGONAL M.5	HEXAGONAL RIVET M.5	2							
	Q042032000	TORNILLO AVELLANADO M5X15	COUNTERSUNK BOLT M5x15	2							
9	T300548000	CONTRAPUERTA BISA COMP 10/21	COMP. HINGE DOOR REVERSE 1	1							
10	T300545000	PANEL PUERTA COMPLETA 10-21	COMPLETE DOOR PANEL 10-21	1							
11	T300520500	BISAGRA SUPERIOR PLEGADA	UPPER FOLDED HINGE	1							
	Q012053000	TORNILLO EXAGONAL M8X20 A304	HEXAGONAL BOLT M8x20 A304	3							
	Q302025000	ARANDELA Ø 8.4X20X1.5	WASHER Ø 8.4X20X1.5	3							
	Q242050000	ARANDELA ABANICO A8 A.304	FAN WASHER A8 A.304	3							
12	Q012042000	TORNILLO EXAGONAL M6X15	HEXAGONAL BOLT M6x15	1							
	R662807000	ARANDELA AMARRE	ANCHORAGE WASHER	1							
	Q242040000	ARANDELA ABANICO A6 A.304	FAN WASHER A6 A.304	1							
	R660534000	EJE SUPERIOR	UPPER SHAFT	1							
	Z850519000	RESORTE 06329	SPRING 06329	1							
13	3715200000	JUNTA CRISTAL	WINDOW SEAL	1							
14	T300546000	CRISTAL EXTERIOR 10/21	EXTERIOR GLASS 10/21	1							
15	R660549000	GUIA EJE INFERIOR FUNDIDO	LOWER SHAFT GUIDE, CAST IRC	1							

MOD.	HORNOS	ZONA	PUERTA	PLANO	C-2022

ITEM	CODIGO	DENOMINACION	TEXTO	HGP-10/21							NOTAS
16	T300521500	BISAGRA INFERIOR	LOWER HINGE	1							
	Q012091000	TORN. EXAG. M6X12 INOX DIN933	HEX. BOLT M6x12 INOX DIN933	2							
	Q242040000	ARANDELA ABANICO A6 A.304	FAN WASHER A6 A.304	2							
	Q062040000	TORN.AVELL.M6X16	COUNTERSUNK BOLT M6X16	4							
17	T130502000	MANILLA COMPLETA	COMPLETE HANDLE	1							
	Q132042000	VARILLA ROSCADA M6X15	THREADED ROD M6X15	1							
18	T130515000	GUIA MANILLA	HANDLE GUIDE	1							
	T130507000	PITON ENGANCHE PUERTA	DOOR FASTENER SPIKE	2							
	T130506000	RESORTE 34548	SPRING 34548	2							
19	T300525000	SOPORTE IMAN	MAGNET BRACKET	1							
20	T300526000	IMAN	MAGNET	1							
21	Z100522000	INTERRUPTOR MAGNETICO	MAGNETIC SWITCH	1							
	Q222011000	REMACHE EXAGONAL M.5	HEXAGONAL RIVET M.5	1							
	Q032031000	TORNILLO ALOMADO M5X10	CURVED SCREW M5X10	1							
22	T302819000	RESORTE INTERRUP. MAGNETICO	SPRING, MAGNETIC SWITCH	1							
23	T130514000	SOPORTE RESORTE	SPRING SUPPORT	1							
	Q032032000	TORNILLO ALOMADO M5x15	CURVED SCREW M5X15	2							
24	T130511000	SUPLEMENTO SUJ. CERRADURA	ANCHORAGE SUPPL. LOCK	1							
25	T300543000	CIERRE RECOGEAGUAS	WATER COLLECTOR COVER	1							
	T300518000	TAPON CIERRE CANALETA 10/21	CAP CHANNEL COVER 10/21	1							
	T300541000	MUELLE CIERRE RECOGEAGUAS	SPRING WATER COLLECTOR CO	1							
	Q221308000	TUERCA EXAGONAL M5 H.ZINCADA	HEXAGONAL NUT M5 ZINC	1							
26	T080503000	SUPLEMENTO ELEMENTO CIERRE	SUPPLEMENT LOCK ELEMENT	10							
27	T080504000	ELEMENTO CIERRE	LOCK ELEMENT	2							
	Q242030000	ARANDELA ABANICO A5	FAN WASHER A5	8							
	Q162030000	TUERCA EXAGONAL M5	HEXAGONAL NUT M5	8							
28	T110506000	ENGANCHE PUERTA MONTADO	FITTED DOOR FASTENER	2							
	Q042045000	TORNILLO AVELLANADO M6x30	COUNTERSUNK BOLT M6x30	4							
29	R660538000	CALZO DE ENGANCHE	FASTENER WEDGE	2							
30	T300519000	SUPLEMENTO ENGANCHE	FASTENER SUPPLEMENT	2							
31	T300507000	TUBO ALARGADERA	EXTENSION PIPE	2							

MOD.	HORNOS	ZONA	PUERTA	PLANO	C-2022

ITEM	CODIGO	DENOMINACION	TEXTO	HGP-10/21							NOTAS
32	T130509000	MECANISMO CIERRE	LOCK MECHANISM	1							
	Q262040000	ARAND.GROW. A6 A.304	WASHER GROW. A6 A.304	2							
	Q162040000	TUERCA EXAGONAL M6	HEXAGONAL NUT M6	2							
	Z608410000	CASQUILLO AMARRE TECLADO	KEYBOARD ANCHORAGE BUSHI	2							
	Q352001000	PASADOR DE ALETAS 2X20	COTTER PIN 2X20	4							
33	T130508000	EJE DE MANILLA	LEVER SHAFT	1							
	T130505000	CASQUILLLO	BUSHING	1							
	Q271033000	ARANDELA DE SEGURIDAD 6	SAFETY WASHER 6	1							
34	T300508000	TAPA CIERRE PUERTA	DOOR CLOSING COVER	1							
	Q032021000	TORNILLO ALOMADO M4x10	CURVED SCREW M4X10	2							

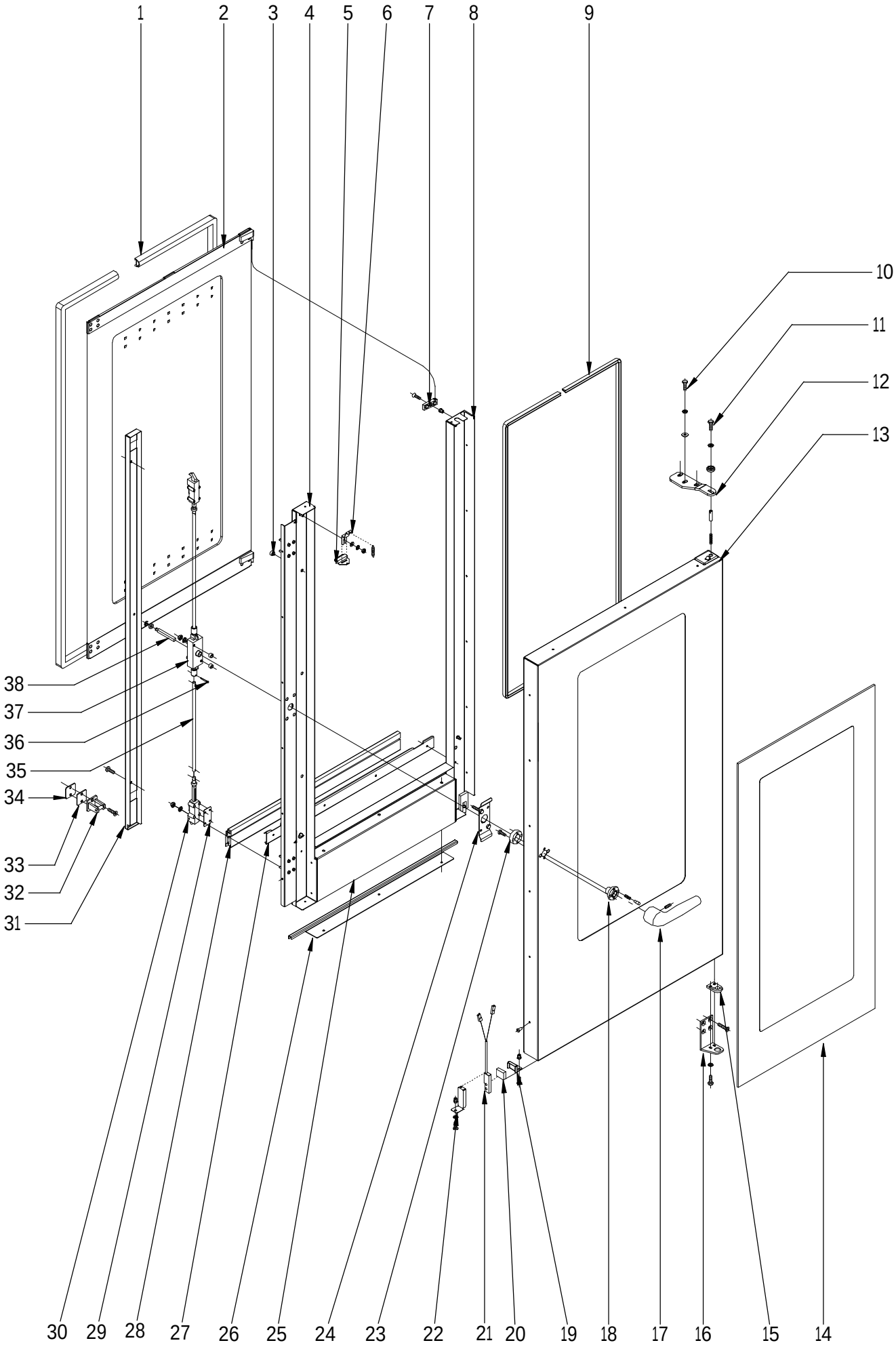

N plano	Firma	Fecha	Aparato		Lamina	
C-2023		2008-04	PUERTA HORNO HGP-20/21		4	Fagor Industrial S.Coop. Oñate

MOD.	HORNOS	ZONA	PUERTA	PLANO	C-2023

ITEM	CODIGO	DENOMINACION	TEXTO	HGP 20/21							NOTAS
	1100003116	**KIT PUERTA COMPLETA**	**COMPLETE DOOR KIT**	**1**							
1	T490500000	JUNTA PUERTA 20/21	DOOR SEAL 20/21	1							
2	**1100003117**	**KIT CRISTAL INTER. 20/21 COMPL.**	**INTER. GLASS KIT 20/21 COMPL**	**1**							
3	T300513000	TOPE CRISTAL INTERIOR 10/21	INTERIOR GLASS BUFFER 10/21	4							
	T300537000	TOPE CRISTAL INTERIOR	INTERIOR GLASS BUFFER	4							
4	T490528000	CONTRAP. MANILLA COMPL 20/21	DOOR REVERSE COMPLETE LEV	1							
5	T300514000	PESTILLO 10/21	LATCH 10/21	2							
6	R670612000	BASE DE PESTILLO	LATCH BASE	2							
	Q302022000	ARANDELA 16X6X1.2 A.304	WASHER 16X6X1.2 A.304	2							
	Q162030000	TUERCA EXAGONAL M5	HEXAGONAL NUT M5	2							
	Q242030000	ARANDELA ABANICO A5 A.304	FAN WASHER A5 A.304	2							
	R660605000	MUELLE TENSOR	TENSIONING SPRING	2							
7	R670615000	BASE DE BISAGRA	HINGE BASE	2							
	Q222011000	REMACHE EXAGONAL M.5	HEXAGONAL RIVET M.5	2							
	Q042032000	TORNILLO AVELLANADO M5X15	COUNTERSUNK BOLT M5x15	2							
8	T490527000	CONTRAPUERTA BISAGRA 20/21	DOOR REVERSE HINGE 20/21	1							
9	3715200000	JUNTA CRISTAL	WINDOW SEAL	2							
10	Q012053000	TORNILLO EXAGONAL M8X20 A304	HEXAGONAL BOLT M8x20 A304	3							
	Q302025000	ARANDELA Ø 8.4X20X1.5	WASHER Ø 8.4X20X1.5	3							
	Q242050000	ARANDELA ABANICO A8 A.304	FAN WASHER A8 A.304	3							
11	Q012042000	TORNILLO EXAGONAL M6X15	HEXAGONAL BOLT M6x15	1							
	R662807000	ARANDELA AMARRE	ANCHORAGE WASHER	1							
	Q242040000	ARANDELA ABANICO A6 A.304	FAN WASHER A6 A.304	1							
12	T300520500	BISAGRA SUPERIOR PLEGADA	UPPER FOLDED HINGE	1							
	R660534000	EJE SUPERIOR	UPPER SHAFT	1							
	Z850519000	RESORTE 06329	SPRING 06329	1							
13	T490525000	PUERTA 20/21	DOOR 20/21	1							
14	T490526000	CRISTAL EXTERIOR 20/21	EXTERIOR GLASS 20/21	1							
15	R660549000	GUIA EJE INFERIOR FUNDIDO	LOWER SHAFT GUIDE, CAST IRC	1							

MOD.	HORNOS	ZONA	PUERTA	PLANO	C-2023

ITEM	CODIGO	DENOMINACION	TEXTO	HGP 20/21							NOTAS
16	T300521500	BISAGRA INFERIOR	LOWER HINGE	1							
	Q012091000	TORN. EXAG. M6X12 INOX DIN933	HEX. BOLT M6x12 INOX DIN933	2							
	Q242040000	ARANDELA ABANICO A6 A.304	FAN WASHER A6 A.304	2							
	Q062040000	TORNILLO AVELLANADO M6X16	COUNTERSUNK BOLT M6x16	4							
17	T130502000	MANILLA COMPLETA	COMPLETE HANDLE	1							
	Q032032000	TORNILLO ALOMADO M5X15	CURVED SCREW M5X15	2							
	Q271033000	ARANDELA DE SEGURIDAD 6	SAFETY WASHER 6	1							
	Q132042000	VARILLA ROSCADA M6X15	THREADED ROD M6X15	1							
	T130510000	TAPON Ø 16 BAGAL Ext.	COVER Ø 16 BAGAL Ext.	1							
18	T130515000	GUIA MANILLA	HANDLE GUIDE	1							
	T490518000	PITON ENGANCHE PUERTA	DOOR FASTENER SPIKE	2							
	T130506000	RESORTE 34548	SPRING 34548	2							
19	T300525000	SOPORTE IMAN	MAGNET BRACKET	1							
	Q222011000	REMACHE EXAGONAL M.5	HEXAGONAL RIVET M.5	1							
	Q032031000	TORNILLO ALOMADO M5X10	CURVED SCREW M5X10	1							
20	T300526000	IMAN	MAGNET	1							
21	Z100522000	INTERRUPTOR MAGNETICO	MAGNETIC SWITCH	1							
22	T302819000	SOPORTE MICRO PUERTA	DOOR MICRO SWITCH	1							
	Q222011000	REMACHE EXAGONAL M.5	HEXAGONAL RIVET M.5	1							
	Q242030000	ARANDELA ABANICO A5 A.304	FAN WASHER A5 A.304	1							
	Q152004000	TORNIL. APLASTADO M5X13 A 304	FLAT HEADED SCREW M5x13 A 3	1							
23	T130514000	SOPORTE RESORTE	SPRING SUPPORT	1							
	Q032032000	TORNILLO ALOMADO M5x15	CURVED SCREW M5X15	2							
24	T130511000	SUPLEMENTO SUJ. CERRADURA	ANCHORAGE SUPPL. LOCK	1							
25	T490524000	CHAPA AMARRE CONTRAPUERTA	DOOR REVERSE FASTENING PL	1							
26	T490534000	SUPERIOR CIERRE PUERTA	UPPER DOOR LOCK	1							
27	T490512000	CHAPA JUNTA CONTRAPUERTA	DOOR REVERSE SEAL PLATE	1							
28	T450530000	JUNTA CIERRE INFERIOR	LOWER DOOR LOCK	1							
29	T080503000	SUPLEMENTO ELEMENTO CIERRE	SUPPLEMENT LOCK ELEMENT	10							

MOD.	HORNOS	ZONA	PUERTA	PLANO	C-2023

ITEM	CODIGO	DENOMINACION	TEXTO	HGP 20/21							NOTAS
30	T080504000	ELEMENTO CIERRE	LOCK ELEMENT	2							
	Q262040000	ARAND.GROW. A6 A.304	WASHER GROW. A6 A.304	10							
	Q162040000	TUERCA EXAGONAL M6	HEXAGONAL NUT M6	10							
31	T490503000	TAPA CIERRE PUERTA 20/21	DOOR LOCK COVER 20/21	1							
	Q032021000	TORNILLO ALOMADO M4X10	CURVED SCREW M4X10	2							
32	T110506000	ENGANCHE PUERTA	DOOR FASTENER	2							
	Q043145000	TORN. AVELLANADO 6X30 LATON	HEXAGONAL BRASS COUNTERS	4							
33	R660538000	CALZO DE ENGANCHE	FASTENER WEDGE	2							
	Q221343000	REMACHE EXAGONAL M.6	HEXAGONAL RIVET M.6	2							
34	T300519000	SUPLEMENTO ENGANCHE	FASTENER SUPPLEMENT	2							
35	T490506000	TUBO ALARGADERA	EXTENSION PIPE	2							
36	Q352001000	PASADOR DE ALETAS 2X20	COTTER PIN 2X20	4							
37	T130509000	MECANISMO CIERRE	LOCK MECHANISM	1							
	Q262040000	ARANDELA GROW. A6 A.304	WASHER GROW. A6 A.304	6							
	Q162040000	TUERCA EXAGONAL M6	HEXAGONAL NUT M6	6							
	Z608410000	CASQUILLO AMARRE TECLADO	KEYBOARD ANCHORAGE BUSHI	2							
38	T490519000	EJE DE MANILLA PUERTA	DOOR HANDLE SHAFT	1							
	T130505000	CASQUILLO	BUSHING	1							

N.plano
C-2024

Firma

Fecha
2008-04

Aparato
HORNO HGP-10/21

MUEBLE INTERIOR

Lamina
5

Fagor Industrial S.Coop.
Oñate

FAGOR

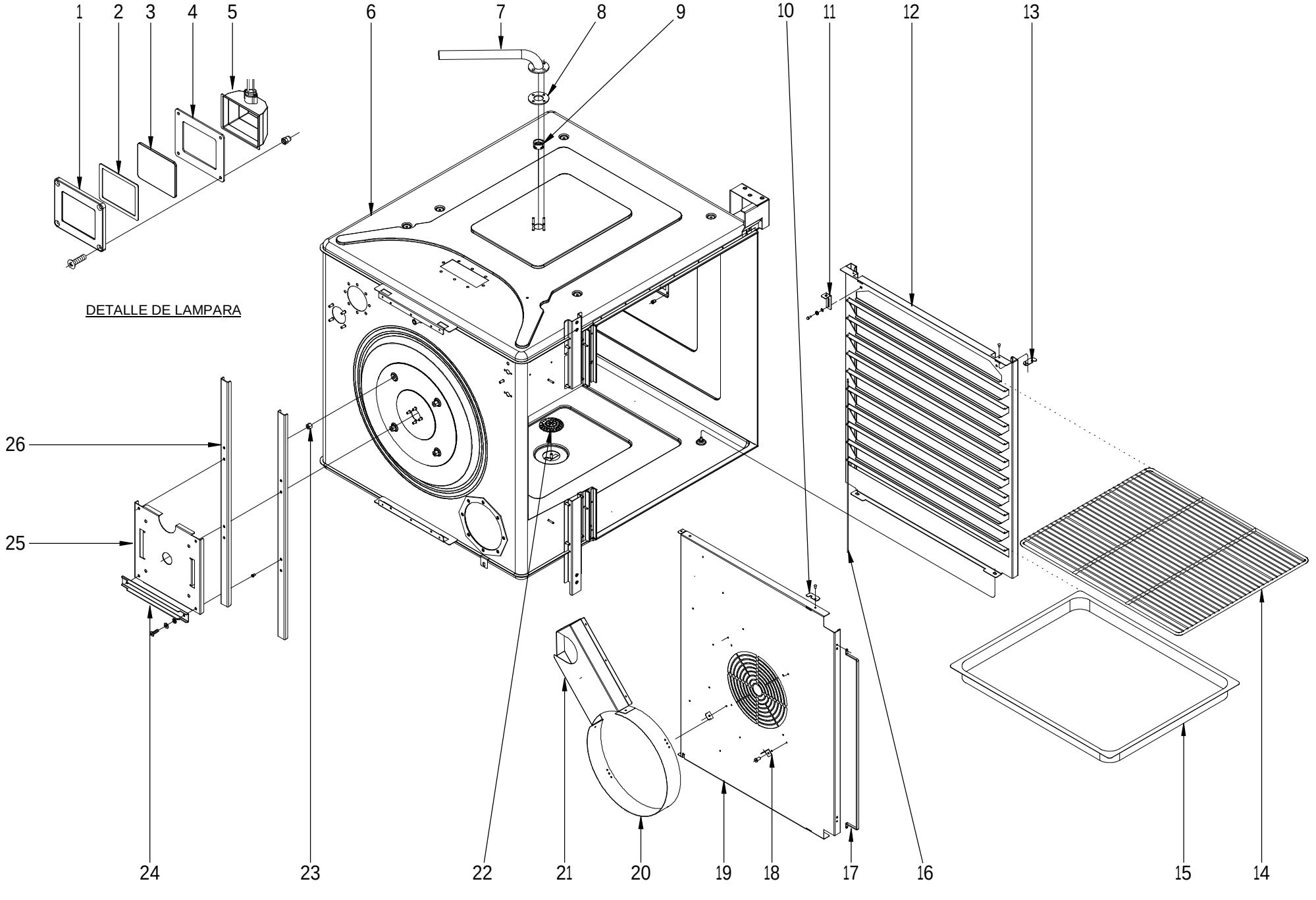

MOD.	HORNOS	ZONA	MUEBLE INTERIOR	PLANO	C-2024

ITEM	CODIGO	DENOMINACION	TEXTO	HGP-10/21							NOTAS
1	T303047000	MARCO LAMPARA	LAMP FRAME	1							
	R663013000	LAMPARA 10W-12V	LAMP 10W-12V	1							
	Q222041000	REMACHE EXAGONAL M.4 INOX	HEXAGONAL RIVET M4 (INOX)	4							
	Q032021000	TORNILLO ALOMADO M4X10	CURVED SCREW M4X10	4							
2	T303027000	JUNTA INTERIOR LAMPARA	LAMP INTERIOR SEAL	1							
3	T303025000	CRISTAL LAMPARA	LAMP GLASS	1							
4	T303026000	JUNTA EXTERIOR LAMPARA	LAMP EXTERIOR SEAL	1							
5	T303023000	PORTALAMPARAS	LAMP HOLDER	1							
6	T362608000	CUERPO INTERIOR HGP-10/21	INNER BODY HGP-10/21	1							
7	T360713000	TUBO DIFUSOR LAVADO COMPL,	COMPL, WASHING DISPENSER F	1							
8	T330744000	CHAPA AMARRE TUBO LAVADO	WASHING PIPE FASTENING PLA	1							
	Q152011000	PERNO SOLDADO M5X20 A304	WELDED BOLT M5X20 A304	4							
	Q162030000	TUERCA EXAGONAL M5	HEXAGONAL NUT M5	4							
	Q232030000	ARANDELA A5	WASHER A5	4							
	Q242030000	ARANDELA ABANICO A5 A.304	FAN WASHER A5 A.304	4							
9	T360712000	PUNTA DIFUSORA LAVADO	WASHING DISPENSER POINT	1							
10	T302635000	ENGANCHE CUBREVENTILADOR	FAN COVER FASTENER	2							
	Q412002000	REMACHE AVINOX Ø4x10mm	RIVET AVINOX Ø4x10mm	10							
11	T302690000	CIERRE PORTABANDEJAS 10/21	TRAY HOLDER CLOSURE 10/21	2							
	Q012021000	TORNILO EXAGONAL M4X10	HEXAGONAL BOLT M4x10	2							
	Q242020000	ARANDELA ABANICO A.4 A304	FAN WASHER A.4 A304	2							
	Q232020000	ARANDELA A-4	WASHER A-4	2							
	Q221341000	REMACHE EXAGONAL M4	HEXAGONAL RIVET M4	2							
12	T322611000	PORTABANDEJAS 1021	TRAY HOLDER 1021	2							
13	T302688000	ENGANCHE PORTABANDEJAS	TRAY HOLDER FASTENER	2							
	Q412006000	REMACHE AVINOX 4x12	RIVET AVINOX 4x12	2							
14	R682676000	PARRILLA 2x1 REF. 2025200	GRILLE 2X1 REF. 2025200	1							
15	R032605000	CUBETA 530x650 400 MM. 2x1	TRAY 530x650 400 MM. 2x1	1							
16	T302692000	TOPE DE BANDEJAS 10/21	TRAY BUFFER 10/21	2							
17	T302618000	PROTECCION INTERIOR	INTERIOR PROTECTION	1							
	Q412002000	REMACHE AVINOX Ø4x10mm	RIVET AVINOX Ø4x10mm	2							

MOD.	HORNOS	ZONA	MUEBLE INTERIOR	PLANO	C-2024

ITEM	CODIGO	DENOMINACION	TEXTO	HGP-10/21							NOTAS
18	T302643000	FIJACIÓN SUPLEMENTO	SUPPLEMENTARY FASTENING	3							
	Q412002000	REMACHE AVINOX Ø4x10mm	RIVET AVINOX Ø4x10mm	6							
19	T342609000	CUBREVENTILADOR 10/21	FAN COVER 10/21	1							
20	T302642000	SUPLEMENTO CUBREVENTILAD.	FAN COVER SUPPLEMENT.	1							
21	T302641000	CONDUCTO DE HUMOS	SMOKE DUCT	1							
22	T302695000	FILTRO DESAGÜE COMPLETO	COMPLETE DRAINAGE FILTER	1							
23	T302638000	DISTANCIADOR MOTOR	MOTOR SPACER	4							
	Q012057000	TORNILLO EXAGONAL M8x50	HEXAGONAL BOLT M8x50	4							
	Q242050000	ARANDELA ABANICO A8 A.304	FAN WASHER A8 A.304	4							
	Q162050000	TUERCA EXAGONAL M8x1	HEXAGONAL NUT M8x1	4							
24	T302649000	REFUERZO MOTOR 10/21	MOTOR REINFORCEMENT 10/21	2							
	Q232030000	ARANDELA A5	WASHER A5	4							
	Q242030000	ARANDELA ABANICO A5 A.304	FAN WASHER A5 A.304	4							
	Q012032000	TORNILLO EXAGONAL M5x15 A304	HEXAGONAL BOLT M5x15 A304	4							
25	T302627000	SOPORTE MOTOR	MOTOR SUPPORT	1							
26	T302628000	PERFIL SOPORTE MOTOR	PROFILE MOTOR SUPPORT	2							
	Q222011000	REMACHE EXAGONAL M.5	HEXAGONAL RIVET M.5	4							
S/Nº	T302650000	AISLANTE TECHO 970x850x20	ROOF INSULATION 970x850x20	3							
S/Nº	T302651000	AISLANTE 890x850x20	INSULATION 890x850x20	3							
S/Nº	T302653000	AISLANTE 1230x900x10	INSULATION 1230x900x10	1							
S/Nº	T452608000	AISLANTE 610x160x10	INSULATION 610x160x10	1							
S/Nº	T302656000	AISLANTE 1000x190x10	INSULATION 1000x190x10	1							
S/Nº	T302658000	AISLANTE 1000x30x10	INSULATION 1000x30x20	1							
	T302667000	ARANDELA SUJECCION AISLANTE	INSULATOR FASTENING WASHE	13							
	Q221026000	CLIP SUJECCION RAPIDA D-4	QUICK FASTENING CLIP D-4	13							

N.plano
C-2025

Firma

Fecha
2008-04

Aparato
HORNO HGP-20/21

MUEBLE INTERIOR

Lamina
6

Fagor Industrial S.Coop.
Oñate

FAGOR

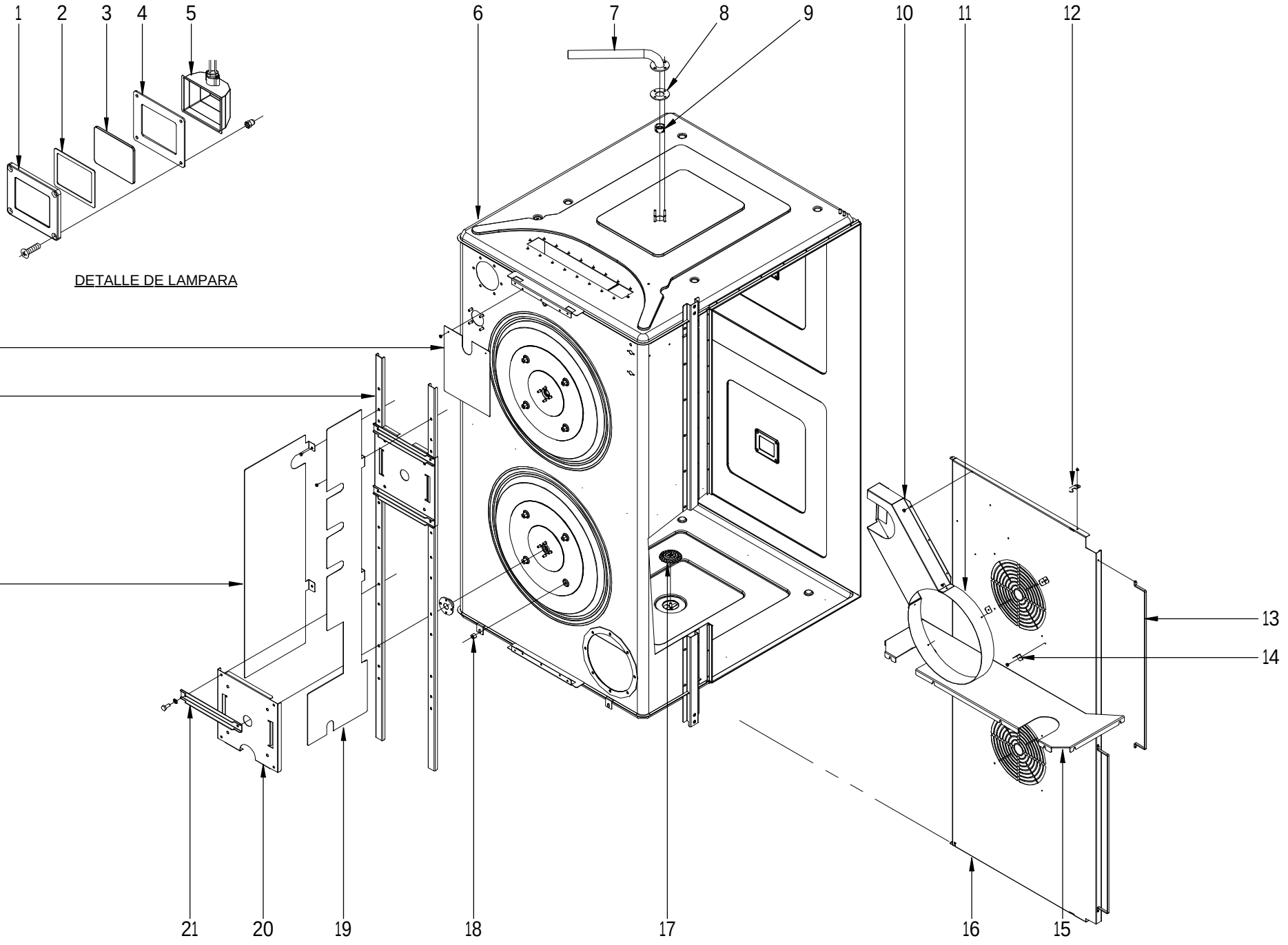

DETALLE DE LAMPARA

MOD.	HORNOS	ZONA	MUEBLE INTERIOR	PLANO	C-2025

ITEM	CODIGO	DENOMINACION	TEXTO	HGP 20/21							NOTAS
1	T303047000	MARCO LAMPARA	LAMP FRAME	2							
	R663013000	LAMPARA 10W-12V	LAMP 10W-12V	2							
	Q222041000	REMACHE EXAGONAL M.4 INOX	HEXAGONAL RIVET M4 (INOX)	8							
	Q032021000	TORNILLO ALOMADO M4X10	CURVED SCREW M4X10	8							
2	T303027000	JUNTA INTERIOR LAMPARA	LAMP INTERIOR SEAL	2							
3	T303025000	CRISTAL LAMPARA	LAMP GLASS	2							
4	T303026000	JUNTA EXTERIOR LAMPARA	LAMP EXTERIOR SEAL	2							
5	T303023000	PORTALAMPARAS	LAMP HOLDER	2							
6	T502601000	CUERPO COMPLETO HGP-20/21	COMPLETE BODY HGP -20/21	1							
7	T360713000	TUBO DIFUSOR LAVADO COMPL	COMPL. WASHING DISPENSER F	1							
8	T330744000	CHAPA AMARRE TUBO LAVADO	WASHING PIPE FASTENING PLA	1							
	Q162030000	TUERCA EXAGONAL M5	HEXAGONAL NUT M5	4							
	Q232030000	ARANDELA A5	WASHER A5	4							
	Q242030000	ARANDELA ABANICO A5 A.304	FAN WASHER A5 A.304	4							
9	T360712000	PUNTA DIFUSORA LAVADO	WASHING DISPENSER POINT	1							
10	T492607000	CONDUCTO DE HUMOS 2021	SMOKE DUCT 2021	1							
	Q412002000	REMACHE AVINOX Ø4x10mm	RIVET AVINOX Ø4x10mm	7							
11	T492608000	SUPLEM. CUBRE VENTILADOR	FAN COVER SUPPL.	1							
12	T302635000	ENGANCHE CUBREVENTILADOR	FAN COVER FASTENER	2							
	Q412002000	REMACHE AVINOX Ø4x10mm	RIVET AVINOX Ø4x10mm	2							
13	T302618000	PROTECCION INTERIOR	INTERIOR PROTECTION	2							
	Q412002000	REMACHE AVINOX Ø4x10mm	RIVET AVINOX Ø4x10mm	4							
14	T302643000	FIJACIÓN SUPLEMENTO	SUPPLEMENTARY FASTENING	3							
	Q412002000	REMACHE AVINOX Ø4x10mm	RIVET AVINOX Ø4x10mm	6							
15	T492620000	CHAPA REFUERZO CUBA G20/21	TUB REINFORCEMENT PLATE G2	1							
16	T492637000	CUBREVENTILADOR 20/21G	FAN COVER 20/21G	1							
17	T302695000	FILTRO DESAGÜE COMPLETO	COMPLETE DRAINAGE FILTER	1							
18	T302638000	DISTANCIADOR MOTOR	MOTOR SPACER	8							
	Q012056000	TORNILLO EXAGONAL M8X40	HEXAGONAL BOLT M8x40	8							
	Q242050000	ARANDELA ABANICO A8 A.304	FAN WASHER A8 A.304	8							
	Q162050000	TUERCA EXAGONAL M8X1 INOX	HEXAGONAL NUT M8x1 INOX.	8							

MOD.	HORNOS	ZONA	MUEBLE INTERIOR	PLANO	C-2025

ITEM	CODIGO	DENOMINACION	TEXTO	HGP 20/21							NOTAS
19	T492626000	CHAPA REPARTO DER. HGV2021	RIGHT PARTITION PLATE HGV20	1							
20	T302627000	SOPORTE MOTOR	MOTOR SUPPORT	2							
21	T302649000	REFUERZO MOTOR	MOTOR REINFORCEMENT	3							
	Q262040000	ARAND.GROW. A6 A.304	WASHER GROW. A6 A.304	6							
	Q012042000	TORNILLO EXAGONAL M6x15	HEXAGONAL BOLT M6x15	6							
	Q222011000	REMACHE EXAGONAL M.5	HEXAGONAL RIVET M.5	6							
22	T492627000	CHAPA REPARTO IZQ. HGV2021	LEFT PARTITION PLATE HGV202	1							
23	T492606000	PERFIL SOPORTE MOTOR 2021	PROFILE MOTOR SUPPORT 2021	2							
24	T492625000	CHAPA REPARTO SUP. HGV2021	SUP. PARTITION PLATE HGV202	1							
S/Nº	T302650000	AISLANTE 970X850X20	INSULATION 970x850x20	3							
S/Nº	T492621000	AISLANTE 1550X850X20	INSULATION 1550X850X20	3							
S/Nº	T452607000	AISLANTE 780X1230X10 E	INSULATION 780X1230X10 E	2							
S/Nº	T452608000	AISLANTE 610X160X10	INSULATION 610X160X10	1							
S/Nº	T492623000	AISLANTE 1680x190x10	INSULATION 1680x190x10	1							
S/Nº	T492624000	AISLANTE 1680x30x10	INSULATION 1680x30x10	1							
S/Nº	T492628000	AISLANTE SALIDA HGV 20/21	OUTPUT INSULATION HGV 20/21	1							
S/Nº	T492639000	AISLANTE CHIMENEA HGV 20/21	FLUEPIPE INSULATION HGV 20/2	1							
	T302667000	ARANDELA SUJECCION AISLANTE	INSULATOR FASTENING WASHE	25							
	Q221026000	CLIP SUJECIÓN RÁPIDA Ø-4	RAPID FASTENING CLIP Ø-4	25							

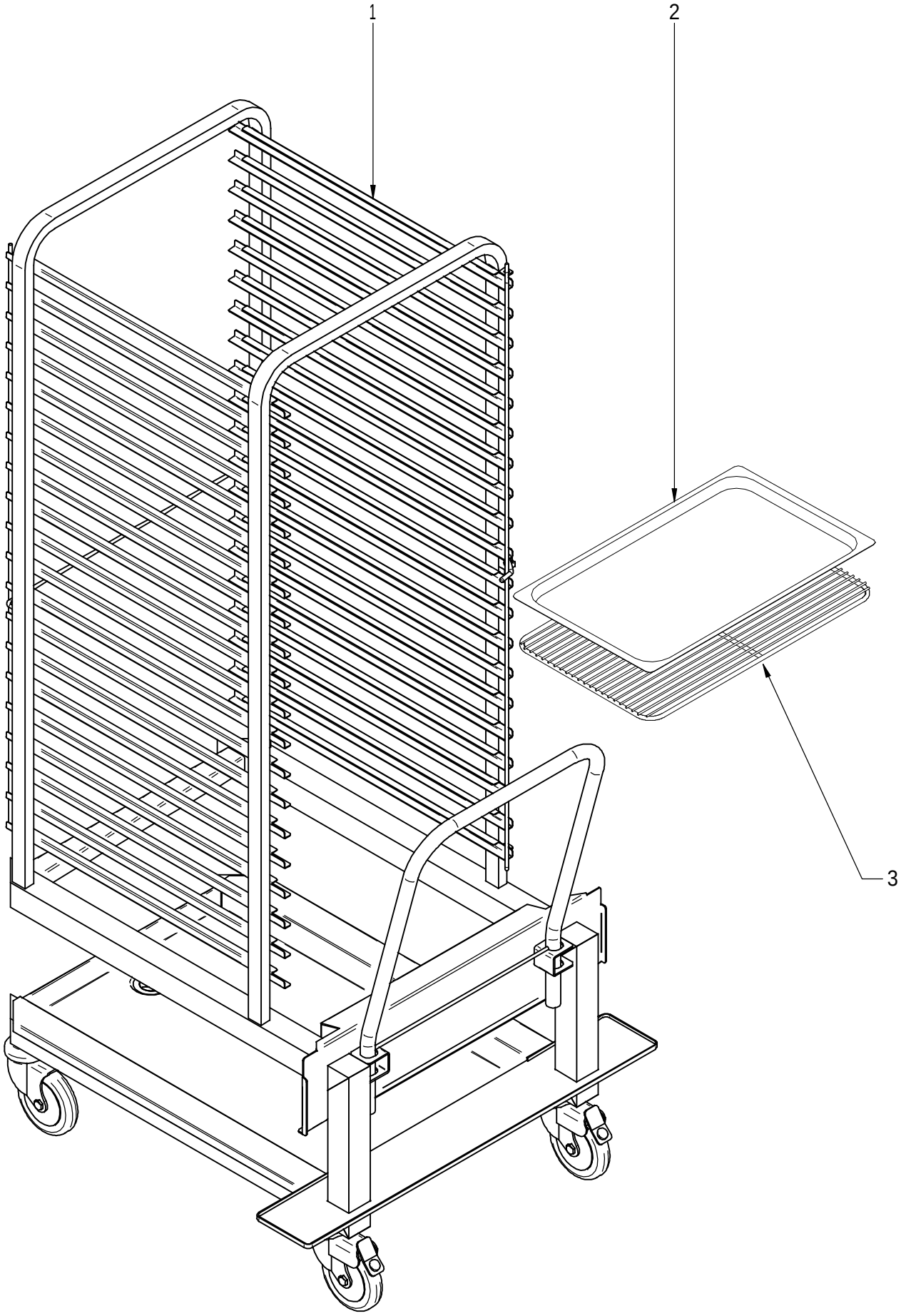

N plano	Firma	Fecha	Aparato		Lamina	
C-2026		2008-04	CARRO HORNO HGP 20/21		7	Fagor Industrial S.Coop. FAGOR Oñate

MOD.	HORNOS	ZONA	CARRO	PLANO	C-2026

ITEM	CODIGO	DENOMINACION	TEXTO	HGP 20/21							NOTAS
1	T492823000	CARRO 20/21	TROLLEY 20/21	1							
	T492853000	CODO DESAGÜE CARRO 20/21	TROLLEY DRAINAGE L-BEND 20/	1							
2	R032605000	CUBETA 530x650 400 MM. 2x1	TRAY 530x650 400 MM. 2x1	1							
3	R682676000	PARRILLA 2x1 REF. 2025200	GRILLE 2X1 REF. 2025200	1							

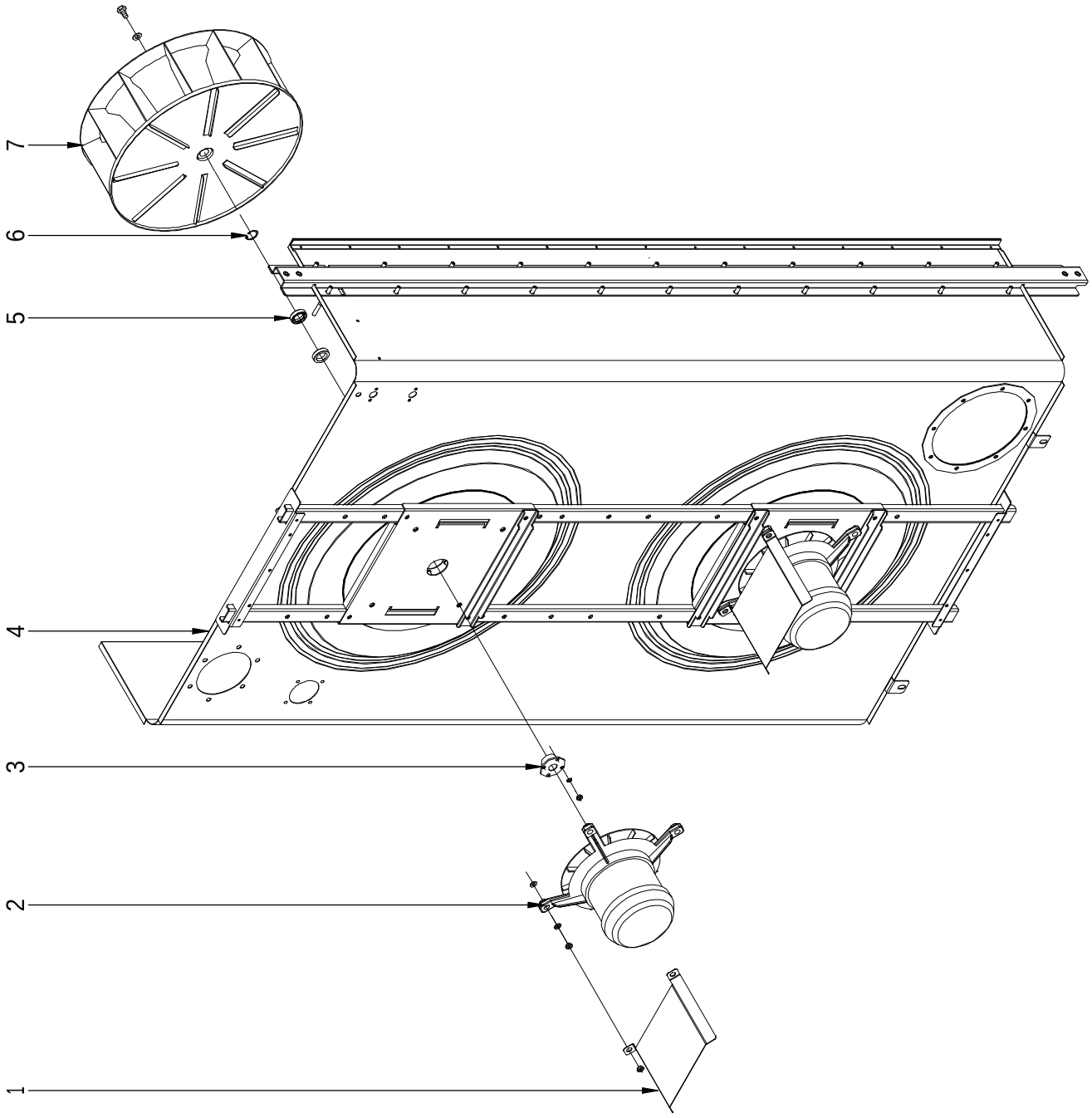

N plano	Firma	Fecha	Aparato		Lamina	
C-2027		2008-04	TURBINA HORNO HGP-10/21; 20/21		8	Fagor Industrial S.Coop. Oñate

MOD.	HORNOS	ZONA	TURBINA	PLANO	C-2027

ITEM	CODIGO	DENOMINACION	TEXTO	HGP-10/21	HGP 20/21						NOTAS
1	T302665000	TEJADILLO MOTOR	MOTOR ROOF	1	_						
1	T142635000	TEJADILLO MOTOR	MOTOR ROOF	_	2						
	Q162040000	TUERCA EXAGONAL M6	HEXAGONAL NUT M6	2	4						
	Q162040000	TUERCA EXAGONAL M6	HEXAGONAL NUT M6	2	4						
	Q262040000	ARANDELA GROW. A6 A.304	WASHER GROW. A6 A.304	4	8						
2	T323022000	MOTOR 2V 400V	MOTOR 2V 400V	1	_						
2	T493003000	MOTOR 20/21 2V 400V	MOTOR 20/21 2V 400V.	_	2						
3	T302629000	CASQUILLO RETEN	SEAL BUSHING	1	2						
	R662685000	JUNTA CASQUILLO RETEN	SEAL BUSHING GASKET	1	2						
	Q232040000	ARANDELA A6	WASHER A6	4	8						
	Q162040000	TUERCA EXAGONAL M6	HEXAGONAL NUT M6	4	8						
4	_____	PANEL DE CUERPO DE HORNO	OVEN BODY PANEL	1	1						
5	R662627000	RETEN 17X28X7V	SEAL 17X28X7V	2	4						
6	Q302023000	ANILLO DE SEGURIDAD D 28X1.2	SAFETY RING Ø 28X1.2	1	2						
7	T303015000	TURBINA 450	FAN 450	1	_						
7	T493017000	TURBINA RECTA Ø350X127 FIR	STRAIGHT FAN Ø350X127 FIR	_	2						
	R763010000	ARANDELA SEGURIDAD HANNING	SAFETY WASHER HANNING	1	2						
	Q012063000	TORNIL. EXAGONAL M10X20 A.304	HEXAGONAL BOLT M10X20 A.304	1	2						

N.plano
C-2028

Firma

Fecha
2008-04

Aparato
HORNO HGP-10/21; 20/21

INTERIOR CHIMENEA

Lamina
9

Fagor Industrial S.Coop.
Oñate

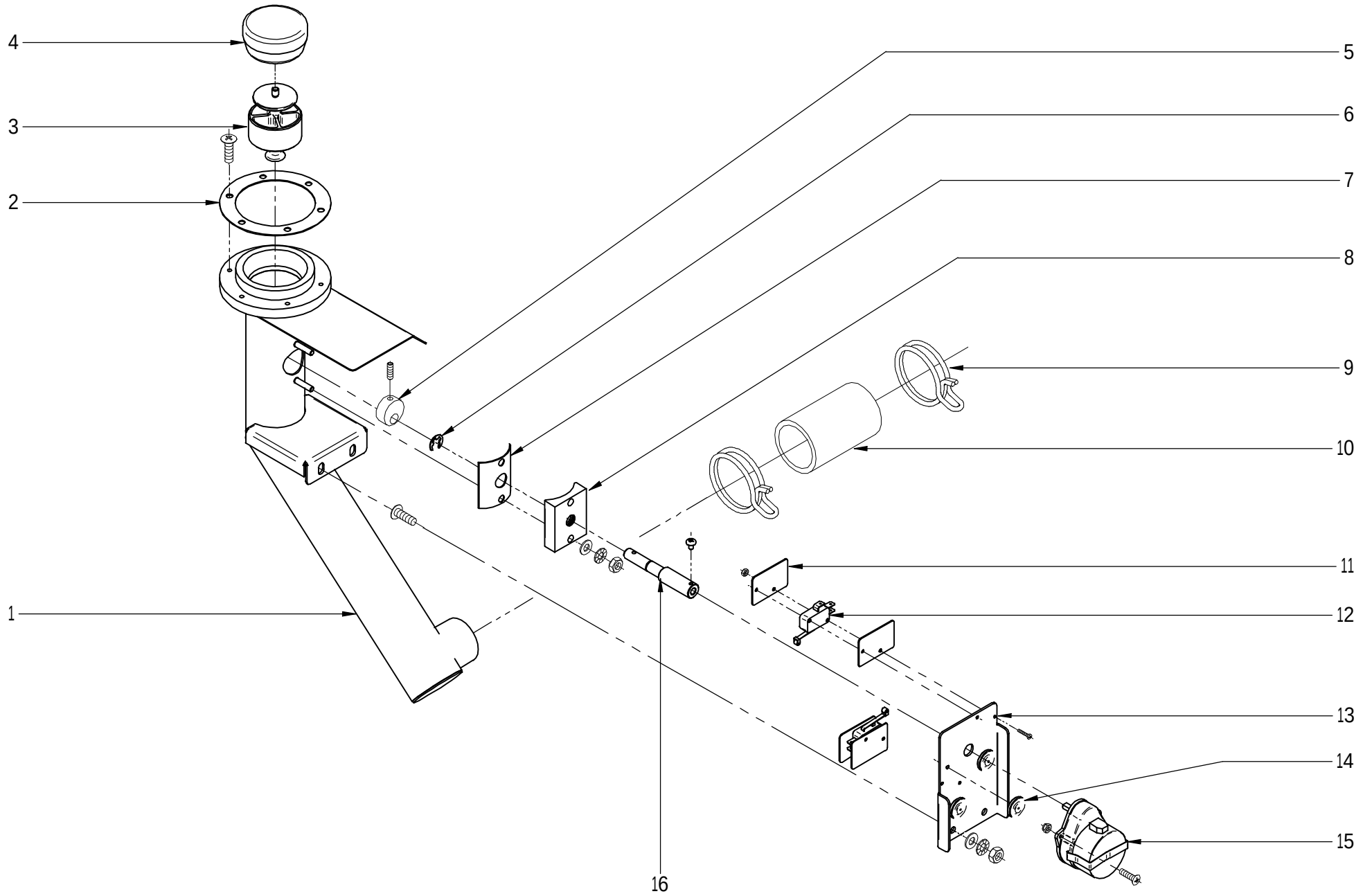

MOD.	HORNOS	ZONA	INTERIOR DE CHIMENEA	PLANO	C-2028

ITEM	CODIGO	DENOMINACION	TEXTO	HGP-10/21	HGP 20/21						NOTAS
1	T362612000	CHIMENEA COMPLETA 10/21 HGP	COMPLETE FLUEPIPE 10/21 HGP	1	_						
1	T492619000	CHIMENEA COMPLETA HGV 20/21	COMPLETE FLUEPIPE HGV 20/21	_	1						
2	T125027000	RETENCION VAPOR HVG	STEAM RETAINER HVG	1	1						
3	R725008000	RESORTE	SPRING	1	1						
4	Q302022000	ARANDELA 16X6X1.2 A.304	WASHER 16X6X1.2 A.304	2	5						
5	Q162040000	TUERCA EXAGONAL M6	HEXAGONAL NUT M6	2	2						
6	T122630000	JUNTA CHIMENEA HGV 10-21	FLUEPIPE SEAL HGV 10-21	1	_						
6	T132631000	JUNTA CHIMENEA HVG 20-21	FLUEPIPE SEAL HVG20-21	_	1						
7	T132635000	REFUERZO CORTO S. CHIMENEA	SHORT REINFORCEMENT S. FLU	2	2						
8	Q213131000	TUERCA SOMBRERETE M5	COWL NUT M5	8	18						
9	T122631000	PLETINA LARGA INFERIOR	LOWER LONG PLATE	2	_						
9	T132632000	PLETINA REF LARGO INFERIOR	LOWER LONG PLATE REF	_	2						
10	R725030000	TUERCA GUIA RETENCION	RETAINER GUIDE NUT	1	1						
	Q307067000	JUNTA TORICA 9.19x2.62	"O" RING 9.19X2.62	1	1						
11	T135046000	EJE DE GUIA DE RETENCION	RETAINER GUIDE SHAFT	1	1						
	Q271033000	ARANDELA DE SEGURIDAD Ø6	SAFETY WASHER Ø6	2	2						
12	T135045000	SUPLEMEN. EJE DE RETENCION	SUPPLEMENTARY RETAINER SH	1	1						
13	T135009000	EJE DE LEVA	CAM SHAFT	1	1						
	Q308013000	ARANDELA Ø14xØ8x2	WASHER Ø14x8x2	2	2						
14	T135047000	PALANCA DE ELEVACION	ELEVATION LEVER	1	1						
15	T135012000	LEVA	CAM	1	1						
	Q012021000	TORNILLO EXAGONAL M4x10	HEXAGONAL BOLT M4x10	1	1						
	Q162040000	TUERCA EXAGONAL M6	HEXAGONAL NUT M6	1	1						
	Q232040000	ARANDELA A6	WASHER A6	1	1						
16	R010535000	PLACA SEPARADORA	SPACER PLATE	4	4						
	Q032013000	TORNILLO ALOMADO M3x20	CURVED SCREW M3X20	4	4						
	Q221350000	TUERCA AUTOBLOCANTE M3	SELF-LOCKING NUT M3	4	4						
17	R010534000	INTERRUPTOR PUERTA	DOOR SWITCH	2	2						
18	T113010000	MOTOR DE CHIMENEA	FLUEPIPE MOTOR	1	1						
	Q042031000	TORNILLO AVELLANADO M5x10	COUNTERSUNK BOLT M5x10	3	3						

MOD.	HORNOS	ZONA	INTERIOR DE CHIMENEA	PLANO	C-2028

ITEM	CODIGO	DENOMINACION	TEXTO	HGP-10/21	HGP 20/21						NOTAS
19	T135021000	ESCUADRA AMARRE MOTOR	MOTOR FASTENING BRACKET	1	1						
	Q232040000	ARANDELA A6	WASHER A6	4	4						
	Q242040000	ARANDELA ABANICO A6 A.304	FAN WASHER A6 A.304	4	4						
	Q162040000	TUERCA EXAGONAL M6	HEXAGONAL NUT M6	4	4						
20	T135022000	SOPORTE AMARRE MOTOR	ENGINE FASTENING SUPPORT	1	1						
21	T135044000	EJE DE RETENCION DE VAPORES	STEAM RETAINER SHAFT	1	1						

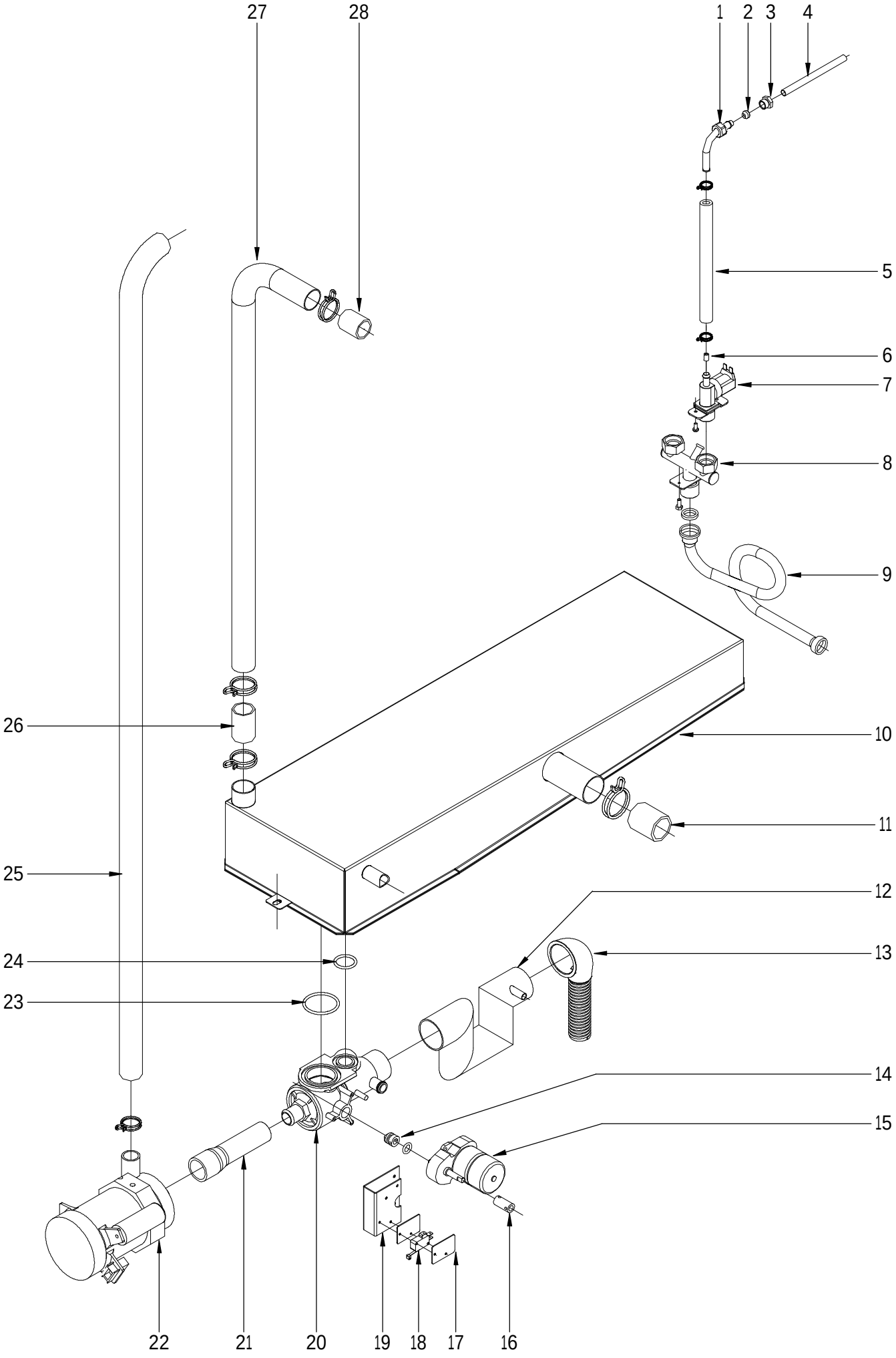

N plano	Firma	Fecha	Aparato	CIRCUITO DE AGUA	Lamina	
C-2029		2008-04	HORNOS HGP-10/21; HGP-20/21		10	Fagor Industrial S.Coop. FAGOR Oñate

MOD.	HORNOS	ZONA	CIRCUITO DE AGUA	PLANO	C-2029

ITEM	CODIGO	DENOMINACION	TEXTO	HGP-10/21	HGP 20/21						NOTAS
1	R695017000	TUBO CONDUCCION AGUA	WATER DUCT PIPE	1	1						
2	R695004000	BICONO	BICONE	1	1						
3	R695003000	MANGUITO CIERRE	CLOSING SLEEVE	1	1						
4	R665024000	TUBO CONDUCCION INYECTOR	INJECTOR DUCT PIPE	1	1						
5	3676900000	TUBO GOMA NEGRA Ø17*10	BLACK RUBBER PIPE Ø17*10	1	1						
	Q901310000	ABRAZADERA ELASTICA 16.8-17.7	ELASTIC CLAMP 16.8-17.7	2	2						
6	R665041000	REGULADOR CAUDAL 0,25L VERDE	FLOW CONTROL 0.25L GREEN	1	1						
7	Z701135000	E.V.SIMP.220V COD.255.208	E.V.SIMP.220V COD.255.208	1	1						
8	T325063000	ENTRADA DE AGUA COMPLETA	COMPLETE WATER INLET	1	1						
	Q012021000	TORNILLO EXAGONAL M4x10	HEXAGONAL BOLT M4x10	2	2						
9	Z601114000	MANGUERA ENTRADA AGUA	WATER INTAKE HOSE	1	1						
	Z701132000	FILTRO DE JUNTA N-3	SEAL FILTER N-3	1	1						
	Q307031000	JUNTA TUBO 14x24x3	PIPE GASKET 14X24X3	2	2						
10	T365004000	CONJUNTO CAJA LAVADO GAS	WASHER BOX UNIT GAS	1	_						
10	T505007000	CAJA DESAGÜE COMPL. G 20-21	COMPL. DRAINAGE BOX G 20-21	_	1						
	Q012032000	TORNILLO EXAGONAL M5X15 A304	HEXAGONAL BOLT M5x15 A304	2	2						
	Q162030000	TUERCA EXAGONAL M5	HEXAGONAL NUT M5	2	2						
	Q232030000	ARANDELA A5	WASHER A5	2	2						
11	3715800000	TUBO SILICONA ALTA Tº Ø43*51	HIGH SILICON PIPE Tº Ø43*51	1	_						
	Q881307000	ABRAZADERA 40-60	CLAMP 40-60	2	_						
11	T455029000	TUBO EMPALME GENERADOR	GENERATOR CONNECTION PIPE	_	1						
	Q901313000	ABRAZADERA ELASTICA 62-66	ELASTIC CLAMP 62-66	_	2						
12	T360718000	SIFON SALIDA VALVULA	VALVE OUTPUT SIPHON	1	1						
	Q881307000	ABRAZADERA 40-60	CLAMP 40-60	2	2						
13	Z200910000	MANGUERA DESAGUE	DRAINAGE HOSE	1	1						
14	T330707000	PUNTA ACOP. MOTOR A VALVULA	CONNECT. POINT MOTOR TO VA	1	1						
	Q307084000	JUNTA TORICA Ø18X3,5	O-RING Ø18X3.5	1	1						

MOD.	HORNOS	ZONA	CIRCUITO DE AGUA	PLANO	C-2029

ITEM	CODIGO	DENOMINACION	TEXTO	HGP-10/21	HGP 20/21						NOTAS
15	T330711000	MOTOR VALVULA	VALVE MOTOR	1	1						
	Q371026000	MANGUITO SUJEC. 4X14 ØIN1481	HOSE FASTENING 4X14 ØIN148	1	1						
	Q042022000	TORNILLO AVELLANADO M4X15	COUNTERSUNK BOLT M4x15	2	2						
	Q162020000	TUERCA EXAGONAL M4	HEXAGONAL NUT M4	2	2						
	Q232020000	ARANDELA A-4	WASHER A-4	2	2						
	Q242020000	ARANDELA ABANICO A.4 A304	FAN WASHER A.4 A304	2	2						
16	T330733000	CASQUILLO MOTOR MICRO	MICRO MOTOR BUSHING	1	1						
	Q032021000	TORNILLO ALOMADO M4X10	CURVED SCREW M4X10	1	1						
17	R010535000	PLACA SEPARADORA	SPACER PLATE	4	4						
	Q032013000	TORNILLO ALOMADO M3X20	CURVED SCREW M3X20	4	4						
	Q032013000	TORNILLO ALOMADO M3X20	CURVED SCREW M3X20	4	4						
	Q232010000	ARANDELA PLANA A3,DIN125	FLAT WASHER A3,DIN125	4	4						
18	R010534000	INTERRUPTOR PUERTA	DOOR SWITCH	2	2						
19	T330713000	CHAPA SUJECION MICROS	FASTENING PLATE MICROS	1	1						
20	T330723000	CUERPO VALVULA COMPLETO	COMPLETE VALVE BODY	1	1						
21	T360719000	GOMA VALVULA BOMBA GAS	GAS PUMP VALVE RUBBER	1	1						
	Q881304000	ABRAZADERA 20-32	CLAMP 20-32	1	1						
	Q881305000	ABRAZADERA 25-40	CLAMP 25-40	1	1						
22	T360715000	MOTOBOMBA 5213E2450 FIR 50Hz	MOTOR-PUMP 5213E2450 FIR 50	1	1						
	Q012043000	TORNILLO EXAGONAL M6x20	HEXAGONAL BOLT M6x20	2	2						
23	Q307080000	JUNTA TORICA Ø52X3,5	O-RING Ø52X3.5	1	1						
24	Q307079000	JUNTA TORICA Ø33x3,5	O-RING Ø33x3.5	1	1						
25	3716000000	TUBO SILICONA ALTA Tª Ø 35*27	HIGH SILICON PIPE Tº Ø 35*27	1	1						
	Q881305000	ABRAZADERA 25-40	CLAMP 25-40	2	2						
26	3716000000	TUBO SILICONA ALTA Tª Ø 35*27	HIGH SILICON PIPE Tº Ø 35*27	1	1						
	Q881305000	ABRAZADERA 25-40	CLAMP 25-40	2	2						
27	T360721000	CHIMENEA DE LAVADO	WASHER FLUEPIPE	1	1						
28	3716000000	TUBO SILICONA ALTA Tª D35*27	HIGH SILICON PIPE Tª D35*27	1	1						
	Q881305000	ABRAZADERA 25-40	CLAMP 25-40	2	2						

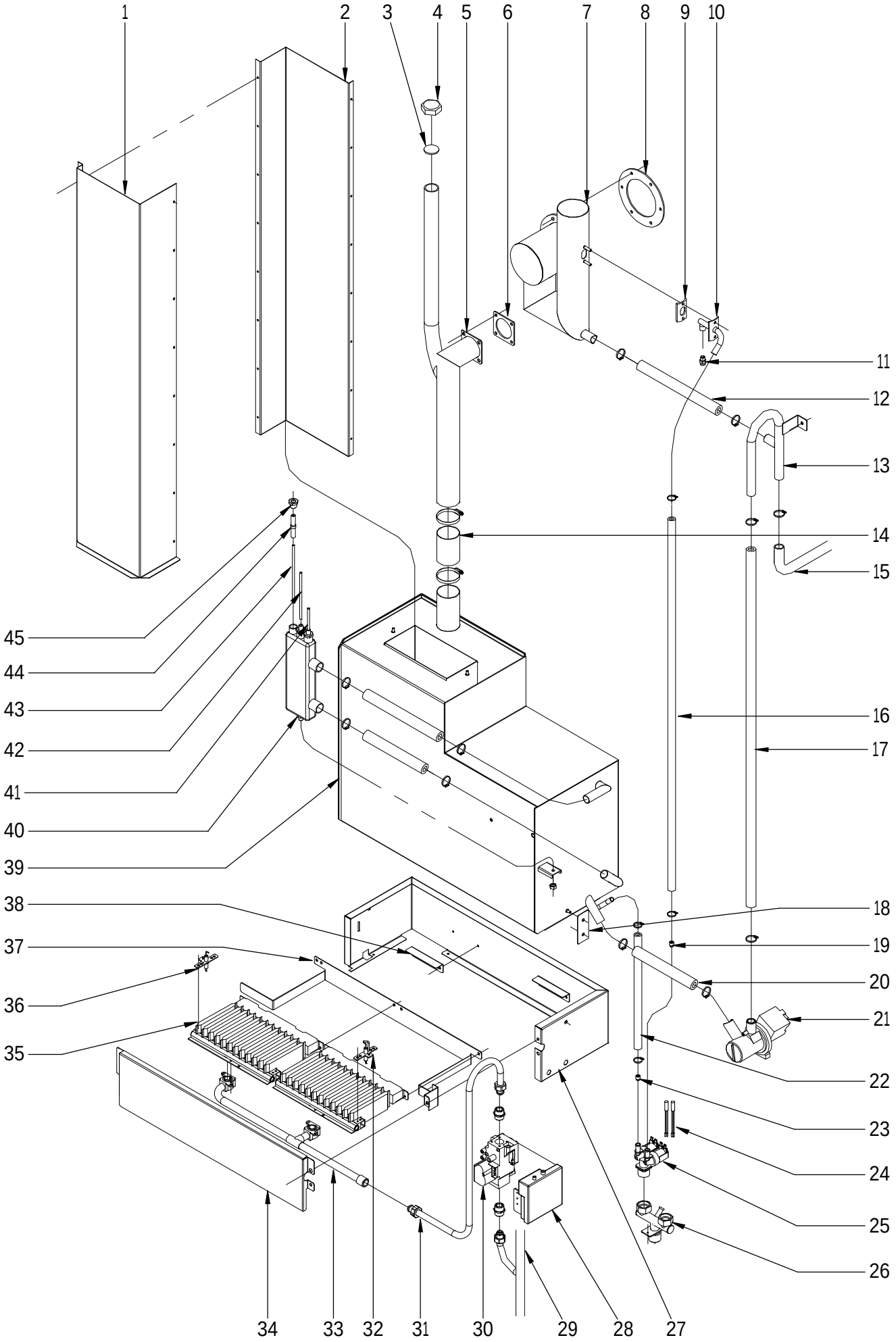

N plano	Firma	Fecha	Aparato		Lamina	
C-2030		2008-04	GENERADOR DE VAPOR HORNO HGP-10/21 HGP-20/21		11	Fagor Industrial S.Coop. FAGOR Oñate

MOD.	HORNOS	ZONA	GENERADOR DE VAPOR	PLANO	C-2030

ITEM	CODIGO	DENOMINACION	TEXTO	HGP-10/21	HGP 20/21						NOTAS
1	T302637000	POSTER. CHIMENEA GENERADOR	REAR FLUEPIPE GENERATOR	1	_						
1	T492610000	POSTER. CHIMENEA GENERADOR	REAR FLUEPIPE GENERATOR	_	1						
2	T302636000	ANTER. CHIMENEA GENERADOR	FRONT FLUEPIPE GENERATOR	1	_						
2	T492609000	ANTER. CHIMENEA GENERADOR	FRONT FLUEPIPE GENERATOR	_	1						
	Q412002000	REMACHE TUBULAR Ø4x7,5	TUBULAR RIVET Ø4x7.5	6	16						
	Q302022000	ARANDELA Ø16xØ6x1.2	WASHER Ø16xØ6x1.2	2	2						
	Q162030000	TUERCA EXAGONAL M5	HEXAGONAL NUT M5	2	2						
	T305055000	AISLANTE CHIMENEA GEN. G1021	FLUEPIPE INSULATION GEN. G1(	1	_						
	T305056000	AISLANTE TAPA CHIM HGV-10-21	INSULATION COVER FLUE HGV-1	1	_						
	T495035000	AISLANTE CHIMENEA GEN. 2021	FLUEPIPE INSULATION GEN. 202	_	1						
	T495047000	AISLANTE CHIMENEA HGV 2021	INSULATION FLUEPIPE HGV 202	_	1						
3	R015011000	ARANDELA Ø32	WASHER Ø32	1	1						
4	R015010000	TUERCA TAPON 1"	PLUG NUT 1"	1	1						
5	T495008000	ENTRADA DE VAPOR COMPL. 2021	COMPL. STEAM INPUT 2021	_	1						
6	T115037000	JUNTA ENTRADA VAPOR	STEAM INPUT SEAL	1	1						
	Q012042000	TORNILLO EXAGONAL M6x15	HEXAGONAL BOLT M6x15	4	4						
	Q232040000	ARANDELA A6	WASHER A6	4	4						
	Q262040000	ARANDELA GROWER A6	WASHER GROWER A6	4	4						
	Q162040000	TUERCA EXAGONAL M6	HEXAGONAL NUT M6	4	4						
7	T305026000	RETORNO COMPLETO HGV 10/21	COMPLETE RETURN HGV 10/21	1	_						
7	T495005000	RETORNO COMPLETO 2021	COMPLETE RETURN 2021	_	1						
	Q232040000	ARANDELA A6	WASHER A6	8	8						
	Q262040000	ARANDELA GROWER A6	WASHER GROWER A6	8	8						
	Q162040000	TUERCA EXAGONAL M6	HEXAGONAL NUT M6	8	8						
8	T305043000	JUNTA DE COLECTOR	MANIFOLD SEAL	2	_						
8	T145711000	JUNTA COLECT 20-11/20-21 GAS	COLLECTOR SEAL 20-11/20-21 G	_	2						
9	R725159000	JUNTA TUBO INYECTOR	INJECTOR PIPE SEAL	1	1						
10	T115112000	CONDUCCION DE VAHOS COMPL.	COMPL. VAPOUR DUCT	1	1						

MOD.	HORNOS	ZONA	GENERADOR DE VAPOR	PLANO	C-2030

ITEM	CODIGO	DENOMINACION	TEXTO	HGP-10/21	HGP 20/21						NOTAS
11	T115086000	TOBERA 1/8"	NOZZLE 1/8	1	1						
	T115093000	TAPON RAMA 12.1X1	BRANCH CAP 12.1X1	1	1						
	Q242030000	ARANDELA ABANICO A5 A.304	FAN WASHER A5 A.304	2	2						
	Q162030000	TUERCA EXAGONAL M5	HEXAGONAL NUT M5	2	2						
12	3715900000	TUBO SILICONA ALTA Tª Ø26*18	HIGH SILICON PIPE Tª Ø26*18	1	1						
	Q901311000	ABRAZADERA ELASTI. Ø26,7-28,1	ELAST. CLAMP Ø26.7-28.1	2	2						
13	T305019000	CONDUC. DESAGÜE GENERADOR	GENERATOR DRAIN PIPE	1	1						
	Q221342000	REMACHE EXAGONAL M5	HEXAGONAL RIVET M5	1	1						
	Q242030000	ARANDELA ABANICO A5	FAN WASHER A5	1	1						
	Q012031000	TORNILLO EXAGONAL M5x10	HEXAGONAL BOLT M5x10	1	1						
14	R345020000	TUBO EMPALME GENERADOR	GENERATOR CONNECTION PIPE	_	1						
	Q881307000	ABRAZADERA 40-60	CLAMP 40-60	_	2						
15	3715900000	TUBO SILICONA ALTA Tª Ø26*18	HIGH SILICON PIPE Tª Ø26*18	1	1						
	Q901311000	ABRAZADERA ELASTI. Ø26,7-28,1	ELAST. CLAMP Ø26.7-28.1	2	2						
16	3676900000	TUBO GOMA NEGRA Ø17xØ10	BLACK RUBBER PIPE Ø17*10	1	1						
	Q901310000	ABRAZADERA ELASTI. Ø16,8-17,7	ELAST. CLAMP Ø16.8-17.7	2	2						
17	3715900000	TUBO SILICONA ALTA Tª Ø26*18	HIGH SILICON PIPE Tª Ø26*18	1	1						
	Q901311000	ABRAZADERA ELASTI. Ø26,7-28,1	ELAST. CLAMP Ø26.7-28.1	2	2						
18	T495046000	CHAPA AMARRE GENERADOR	GENERATOR FASTENING PLATE	_	2						
	Q232040000	ARANDELA A6	WASHER A6	_	2						
	Q242040000	ARANDELA ABANICO A6 A.304	FAN WASHER A6 A.304	_	2						
	Q162040000	TUERCA EXAGONAL M6	HEXAGONAL NUT M6	_	2						
19	P443042000	REGULADOR 3L NE.254.023	REGULATOR 3L NE.254,023	1	1						
20	3715900000	TUBO SILICONA ALTA Tª Ø26*18	HIGH SILICON PIPE Tª Ø26*18	1	1						
	Q901311000	ABRAZADERA ELASTI. Ø26,7-28,1	ELAST. CLAMP Ø26.7-28.1	2	2						
21	Z220901000	BOMBA DESAGUE 30W	DRAINAGE PUMP 30W	1	1						
21	Z223501000	BOMBA DE DESAGUE 30W 60HZ	DRAINAGE PUMP 30W 60HZ	1	1						
22	3676900000	TUBO GOMA NEGRA Ø17xØ10	BLACK RUBBER PIPE Ø17*10	1	1						
	Q901310000	ABRAZADERA ELASTI. Ø16,8-17,7	ELAST. CLAMP Ø16.8-17.7	2	2						
23	Z601156000	REGULADOR 8L RO. 254.034	REGULATOR 8L RED 254.034	1	1						
24	Z233012000	CONDENSAD. ANTIPARASITARIO	ANTIPARASITIC CONDENSER	2	2						

MOD.	HORNOS	ZONA	GENERADOR DE VAPOR	PLANO	C-2030

ITEM	CODIGO	DENOMINACION	TEXTO	HGP-10/21	HGP 20/21						NOTAS
25	P255001000	ELECTROVALVULA DOBLE	DOUBLE SOLENOID VALVE	1	1						
26	T325063000	ENTRADA AGUA COMPLETA	COMPLETE WATER INLET	1	1						
	Q012021000	TORNILLO EXAGONAL M4x10	HEXAGONAL BOLT M4x10	2	2						
27	T305704000	CAJA DE QUEMADOR	BURNER BOX	1	_						
27	T495701000	CAJA DE QUEMADOR 2021	BURNER BOX 2021	_	1						
	Q242030000	ARANDELA ABANICO A5 A.304	FAN WASHER A5 A.304	2	2						
	Q232030000	ARANDELA A5	WASHER A5	2	2						
	Q012031000	TORNILLO EXAGONAL M5x10 A304	HEXAGONAL BOLT M5x10 A304	2	2						
S/Nº	T305061000	AISLANTE CAJA DE QUEMADOR	BURNER BOX INSULATION	1	_						
S/Nº	T495037000	AISLANTE CAJA QUEM HGV 2021	BURNER BOX INSULATION HGV	_	1						
28	T303013000	CONTROL DE ENCENDIDO HONEYW	IGNITION CONTROL HONEYWEL	1	1						
29	T305093000	ENTRADA DE GAS COMP. 10-21	COMP GAS INPUT 10-21	1	_						
29	T495019000	ENTRADA GAS COMPLETA	COMPLETE GAS INPUT	_	1						
	Q012032000	TORNILLO EXAGONAL M5x15	HEXAGONAL BOLT M5x15	2	2						
	Q242030000	ARANDELA ABANICO A5 A.304	FAN WASHER A5 A.304	2	2						
	Q232030000	ARANDELA A5	WASHER A5	2	2						
	Q162030000	TUERCA EXAGONAL M5	HEXAGONAL NUT M5	2	2						
30	T305054000	VALVULA GENERADOR VK 4105T	GENERATOR VALVE VK 4105T	1	1						
	S205023000	MANGUITO DOBLE 1/2	DOUBLE SLEEVE 1/2	1	2						
31	T305090000	TUBO DE GAS FLEXIBLE 300-90º	GAS HOSE 300-90º	1	_						
	Z955807000	JUNTA CORCHO	CORK SEAL	1	_						
	Q151320000	TOR. ALOMADO M4X6 H.ZINCADO	CURVED SCREW M4X6 H. ZINC	2	_						
31	T495024000	CONDUCCION GENERADOR COM.	COM. GENERATOR PIPE	_	1						
	Q306012000	ARANDELA 18x13x1.5 KLING.SIL	WASHER Ø18X13X1.5 KLING.SIL	_	4						
	Q012032000	TORNILLO EXAGONAL M5x15	HEXAGONAL BOLT M5x15	_	2						
	Q242030000	ARANDELA ABANICO A5 A.304	FAN WASHER A5 A.304	_	2						
	Q232030000	ARANDELA A5	WASHER A5	_	2						
	Q162030000	TUERCA EXAGONAL M5	HEXAGONAL NUT M5	_	2						
32	Z955802000	ELECTRODO IGNICION F1643500	IGNITION ELECTRODE F1643500	1	1						
	Q153021000	TORNILLO ALOMADO M4x10	CURVED SCREW M4X10	1	1						

MOD.	HORNOS	ZONA	GENERADOR DE VAPOR	PLANO	C-2030

ITEM	CODIGO	DENOMINACION	TEXTO	HGP-10/21	HGP 20/21						NOTAS
33	T305718000	ACOPLADOR COMPLETO 10/21	COMPLETE COUPLER 10/21	1	_						
33	T145714000	ACOPLADOR COMPLETO 20/21	COMPLETE COUPLER 20/21	_	1						
	Z955807000	JUNTA CORCHO	CORK SEAL	1	2						
	Q151320000	TOR. ALOMADO M4X6 H.ZINCADO	CURVED SCREW M4X6 H. ZINC	6	4						
34	T305705000	TAPA CAJA QUEMADOR	BURNER BOX COVER	1	_						
34	T495702000	TAPA CAJA QUEMADOR	BURNER BOX COVER	_	1						
	T305062000	AISLANTE TAPA DE QUEMADOR	BURNER COVER INSULATION	1	_						
	T495038000	AISLANTE TAPA QUEM. HGV 2021	BURNER COVER INSULATION HC	1	1						
35	Z955801000	QUEMADOR DEL GENERADOR	GENERATOR BURNER	1	2						
	Q042022000	TORNILLO AVELLANADO M4X15	COUNTERSUNK BOLT M4x15	2	4						
	Q242020000	ARANDELA ABANICO A.4 A304	FAN WASHER A.4 A304	2	4						
	Q163020000	TUERCA EXAGONAL M4 LATON	HEXAGONAL NUT M4 BRASS	2	4						
36	Z955803000	ELECTRODO DETECCION F1643600	DETECTION ELECTRODE F16436	1	1						
	Q153021000	TORNILLO ALOMADO M4x10	CURVED SCREW M4X10	1	1						
37	T305706000	ESCUADRA AMARRE QUEMADOR	BURNER FASTENING BRACKET	1	_						
37	T495703000	ESCUADRA AMARRE QUEMADOR	BURNER FASTENING BRACKET	_	1						
	Q412002000	REMACHE AVINOX Ø4x10mm	RIVET AVINOX Ø4x10mm	2	4						
	Q221342000	REMACHE EXAGONAL M5	HEXAGONAL RIVET M5	2	2						
	Q152004000	TORNIL. APLASTADO M5x13 A304	FLAT HEADED BOLT M5x13 A304	2	2						
38	T305707000	APOYO QUEMADOR	BURNER SUPPORT	1	2						
	Q412002000	REMACHE AVINOX Ø4x10mm	RIVET AVINOX Ø4x10mm	2	4						
39	**1100003107**	**KIT GENERADOR VAPOR COMPL.**	**COMPL. STEAM GENERATOR KI**	**1**	_						
39	**1100003119**	**KIT GENERADOR VAPOR COMPL.**	**COMPL. STEAM GENERATOR KI**	_	**1**						
	T305079000	AISLANTE GENERADOR	GENERATOR INSULATION	2	2						
	T305080000	AISLANTE LATERAL GENERADOR	GENERATOR SIDE INSULATION	2	1						
	T305081000	AISLANTE SUP GENERADOR 10/20	GENERATOR SUP. INSULATION 1	1	_						
	T495036000	AISLANTE LATER. DER. 2021	RIGHT SIDE INSULATION 2021	_	1						
	T495039000	AISLANTE POST. GEN. HGV-2021	REAR INSULATION GEN. HGV-20	_	2						
	T495040000	AISLANTE SUP. GEN. HGV-2021	SUP. INSULATION GEN. HGV-202	_	1						
	T495041000	AISLANTE SUP. DER. HGV 2021	RIGHT SUP. INSULATION HGV20	_	1						

MOD.	HORNOS	ZONA	GENERADOR DE VAPOR	PLANO	C-2030

ITEM	CODIGO	DENOMINACION	TEXTO	HGP-10/21	HGP 20/21						NOTAS
S/Nº	Z950353000	ESCUADRA PROTECCION	BRACKET PROTECTION	1	2						
	Q232030000	ARANDELA A5	WASHER A5	2	4						
	Q242030000	ARANDELA ABANICO A5 A.304	FAN WASHER A5 A.304	2	4						
	Q163030000	TUERCA EXAGONAL M5	HEXAGONAL NUT M5	2	4						
40	T325077000	BOTE DE NIVELES	LEVELS VESSEL	1	1						
	Q228051000	TUERCA EXAGONAL M8 PLASTICO	HEXAGONAL NUT M8 PLASTIC	1	1						
41	R345063000	ELECTRODO DE NIVEL BAJO	LOW LEVEL ELECTRODE	1	1						
42	R345060000	ELECTRODO DE NIVEL ALTO	HIGH LEVEL ELECTRODE	1	1						
43	R345064000	ELECTRODO DE MASA	EARTH ELECTRODE	1	1						
44	R345059000	GUIA AISLANTE	INSULATION GUIDE	3	3						
45	R345058000	RACORD	CONNECTION	3	3						

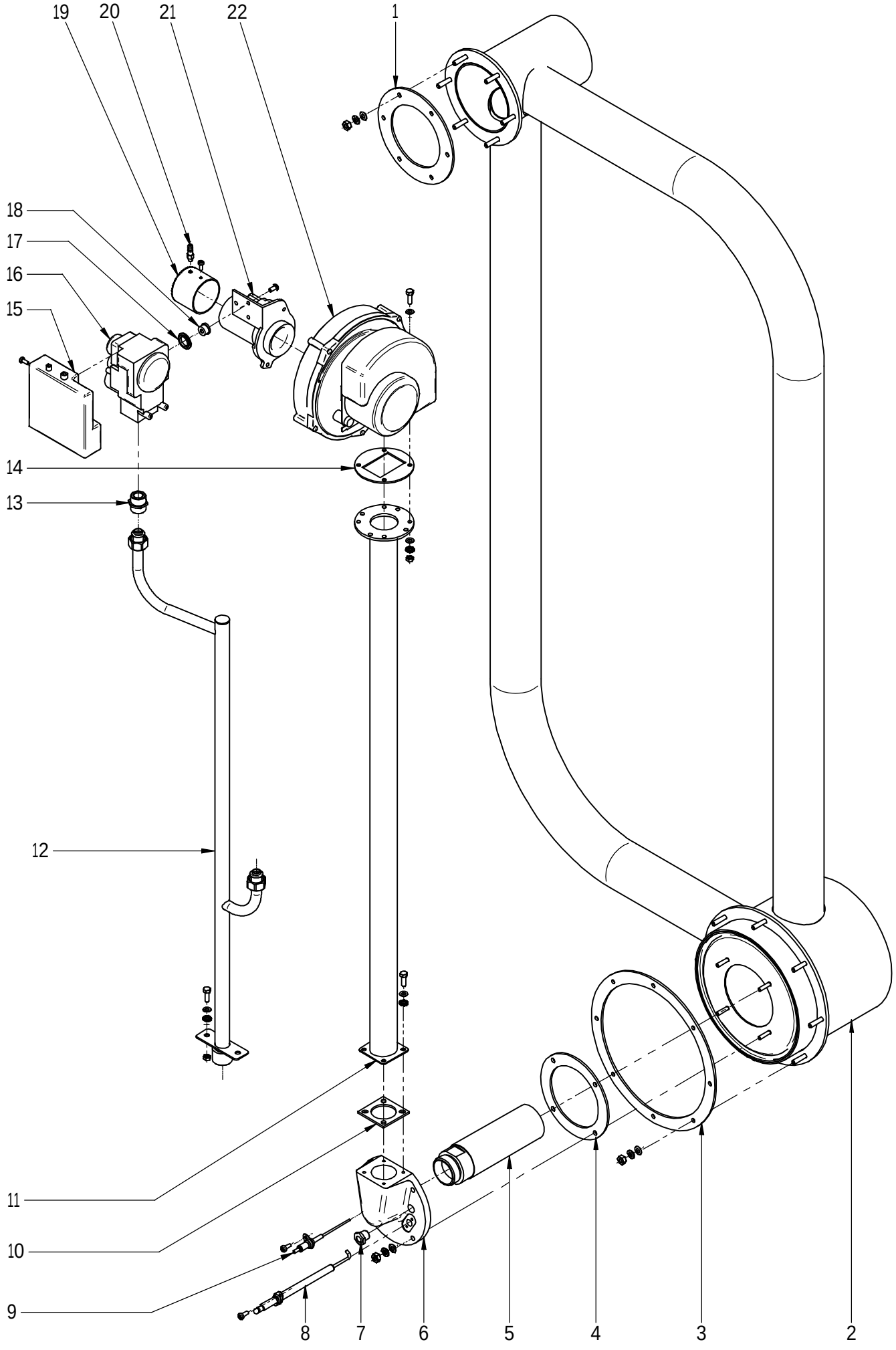

N plano	Firma	Fecha	Aparato		Lamina	
C-2031		2008-04	PARTE FUNCIONAL GAS HORNOS HGP-10/21; 20/21		12	Fagor Industrial S.Coop. FAGOR Oñate

MOD.	HORNOS	ZONA	PARTE FUNCIONAL GAS	PLANO	C-2031

ITEM	CODIGO	DENOMINACION	TEXTO	HGP-10/21	HGP 20/21						NOTAS
1	T305043000	JUNTA DE COLECTOR	MANIFOLD SEAL	2	_						
1	T145711000	JUNTA COLECT 20-11/20-21 GAS	COLLECTOR SEAL 20-11/20-21 G	_	2						
	Q232040000	ARANDELA A6	WASHER A6	4	4						
	Q262040000	ARAND.GROW. A6 A.304	WASHER GROW. A6 A.304	4	4						
	Q163040000	TUER.EXA.M6 LATON	HEX NUTM6 BRASS	4	4						
2	**T365701000**	**INTERCAMBIADOR COM. HGP1021**	**COM. HEAT EXCHANGER HGP10**	**1**	_						
2	**1100003121**	**INTERCAMBIADOR COMP. 2021**	**COMP. HEAT EXCHANGER 2021**	_	**1**						
3	R725051000	JUNTA CAMARA COMBUST. 10/21	FUEL CHAMBER SEAL 10/21	1	_						
3	T145710000	JUNTA CAMARA COMBUST. 20/21	FUEL CHAMBER SEAL 20/21	_	1						
	Q232040000	ARANDELA A6	WASHER A6	8	14						
	Q262040000	ARAND.GROW. A6 A.304	WASHER GROW. A6 A.304	8	14						
	Q163040000	TUER.EXA.M6 LATON	HEX NUTM6 BRASS	8	14						
4	R725055000	JUNTA DE TAPA PRINCIPAL	MAIN COVER SEAL	1	1						
5	T115710000	QUEMADOR FURIGAS 10-11/10-21	BURNER FURIGAS 10-11/10-21	1	_						
5	T495709000	QUEMADOR HGV-HGC-20/21	BURNER HGV-HGC-20/21	_	1						
6	T115782000	TAPA PRINCIPAL 10/21	PRINCIPAL COVER 10/21	1	_						
6	T495710000	TAPA PRINCIPAL 20/21	PRINCIPAL COVER 20/21	_	1						
	Q232030000	ARANDELA A5	WASHER A5	4	4						
	Q242030000	ARAND.GROW. A5 A.304	WASHER GROW A5 A.304	4	4						
	Q163030000	TUER.EXA.M5 LATON	HEX NUTM5 BRASS	4	4						
7	R725015000	VISOR DE ENCENDIDO	IGNITION WINDOW	1	1						
	R725063000	CRISTAL DE VISOR	WINDOW GLASS	1	1						
8	T115781000	ELECTRODO IGNICION 10/21	IGNITION ELECTRODE 10/21	1	_						
8	T135706000	ELECTRODO IGNICION 20/11-20/21	IGNITION ELECTRODE 20/11-20/2	_	1						
	Q153021000	TORNILLO ALOMADO M4 X 10	CURVED SCREW M4 X 10	2	2						
9	T115712000	ELECTRODO DETEC. 10-21GAS	DETECTION ELECTRODE 10-21G	1	_						
9	T135705000	ELECTRODO DETEC 201/202 GAS	DETEC. ELECTRODE 201/202 GA	_	1						
	Q153021000	TORNILLO ALOMADO M4 X 10	CURVED SCREW M4 X 10	1	1						
10	T305041000	JUNTA TAPA PRINCIPAL	PRINCIPAL COVER SEAL	1	1						

MOD.	HORNOS	ZONA	PARTE FUNCIONAL GAS	PLANO	C-2031

ITEM	CODIGO	DENOMINACION	TEXTO	HGP-10/21	HGP 20/21						NOTAS
11	T305035000	CONDUCTO TAPA PRINCIPAL COM	PRINCIPAL COVER PIPE COM	1	_						
11	T495031000	TUBO TAPA PRINCIPAL COMP. 2021	COMP. PRINCIPAL COVER PIPE 2	_	1						
	Q012032000	TORNILLO EXAGONAL M5x15	HEXAGONAL BOLT M5x15	4	4						
	Q232030000	ARANDELA A5	WASHER A5	4	4						
	Q242030000	ARANDELA ABANICO A5 A.304	FAN WASHER A5 A.304	4	4						
12	T305093000	ENTRADA DE GAS COMP. 10-21	COMP GAS INPUT 10-21	1	_						
	T305089000	TUBO DE GAS FLEXIBLE 300	GAS HOSE 300	1	_						
	Q032021000	TORNILLO ALOMADO M4X10	CURVED SCREW M4X10	6	_						
12	T495019000	ENTRADA GAS COMPLETA	COMPLETE GAS INPUT	_	1						
	Q012032000	TORNILLO EXAGONAL M5x15	HEXAGONAL BOLT M5x15	2	2						
	Q242030000	ARANDELA ABANICO A5 A.304	FAN WASHER A5 A.304	2	2						
	Q232030000	ARANDELA A5	WASHER A5	2	2						
	Q162030000	TUERCA EXAGONAL M5	HEXAGONAL NUT M5	2	2						
13	S205023000	MANGUITO DOBLE 1/2	DOUBLE SLEEVE 1/2	1	2						
14	T305042000	JUNTA VENTILADOR	FAN SEAL	1	1						
	Q242030000	ARANDELA ABANICO A5 A.304	FAN WASHER A5 A.304	8	8						
	Q012032000	TORNILLO EXAGONAL M5x15	HEXAGONAL BOLT M5x15	8	8						
	Q232030000	ARANDELA A5	WASHER A5	12	12						
	Q162030000	TUERCA EXAGONAL M5	HEXAGONAL NUT M5	4	4						
15	T303013000	CONTROL ENCEND. HONEYWELL	IGNITION CONTROL HONEYWEL	1	1						
16	T303017000	VALVULA VK 4115 V 1121	VALVE VK4115 V1121	1	1						
17	T303046000	JUNTA VENTURI 24x15.5	VENTURI SEAL 24x15.5	1	1						
18	T305068000	TOBERA VK41 Ø4.8 (BUT-PROP.)	NOZZLE VK41 Ø4.8 (BUT-PROP.)	1	_						
18	T305069000	TOBERA VK41 Ø.6 (GAS NATURAL)	NOZZLE VK41 Ø.6 (GAS NATURA	1	_						
18	T495032000	TOBERA VK41 Ø5.25 (BUT-PROP.)	NOZZLE VK41 Ø5.25 (BUT-PROP.	_	1						
18	T495033000	TOBERA VK41 Ø7 (GAS NATURAL)	NOZZLE VK41 Ø7 (GAS NATURAL	_	1						
19	T305712000	TUBO VENTILADOR COMPLETO	COMPLETE FAN PIPE	1	1						
	Q307036000	JUNTA TOR. 5.28X8.84X1.78	"O" RING. 5.28X8.84X1.78	1	1						
	Q151320000	TOR.ALOMADO M4X6 H.ZINCADO	CURVED SCREW M4X6 H.ZINC C	1	1						
20	R725077000	BOQUILLA CONEX. PRESOSTATO	CONNEX NOZZLE PRESSURE SV	1	1						

MOD.	HORNOS	ZONA	PARTE FUNCIONAL GAS	PLANO	C-2031

ITEM	CODIGO	DENOMINACION	TEXTO	HGP-10/21	HGP 20/21						NOTAS
21	T303040000	VENTURI 45.900.446.052	VENTURI 45.900.446.052	1	_						
21	T493006000	VENTURI 45.900.444.001	VENTURI 45,900,444,001	_	1						
	Q032031000	TOR.ALOMADO M5X10	CURVED SCREW M5X10	3	3						
22	T303016000	VENTILADOR RG-130	FAN RG-130	1	_						
22	T495028000	CONJUNTO VENTIL VALV BP 2021	VALVE FAN UNIT BP 2021	_	1						

N.plano
C-2032

Firma

Fecha
2008-04

Aparato
HORNOS HGP-10/21; HEP-20/21

PARTE ELECTRICA PORTAMANDOS

Lamina
13

Fagor Industrial S.Coop.
Oñate

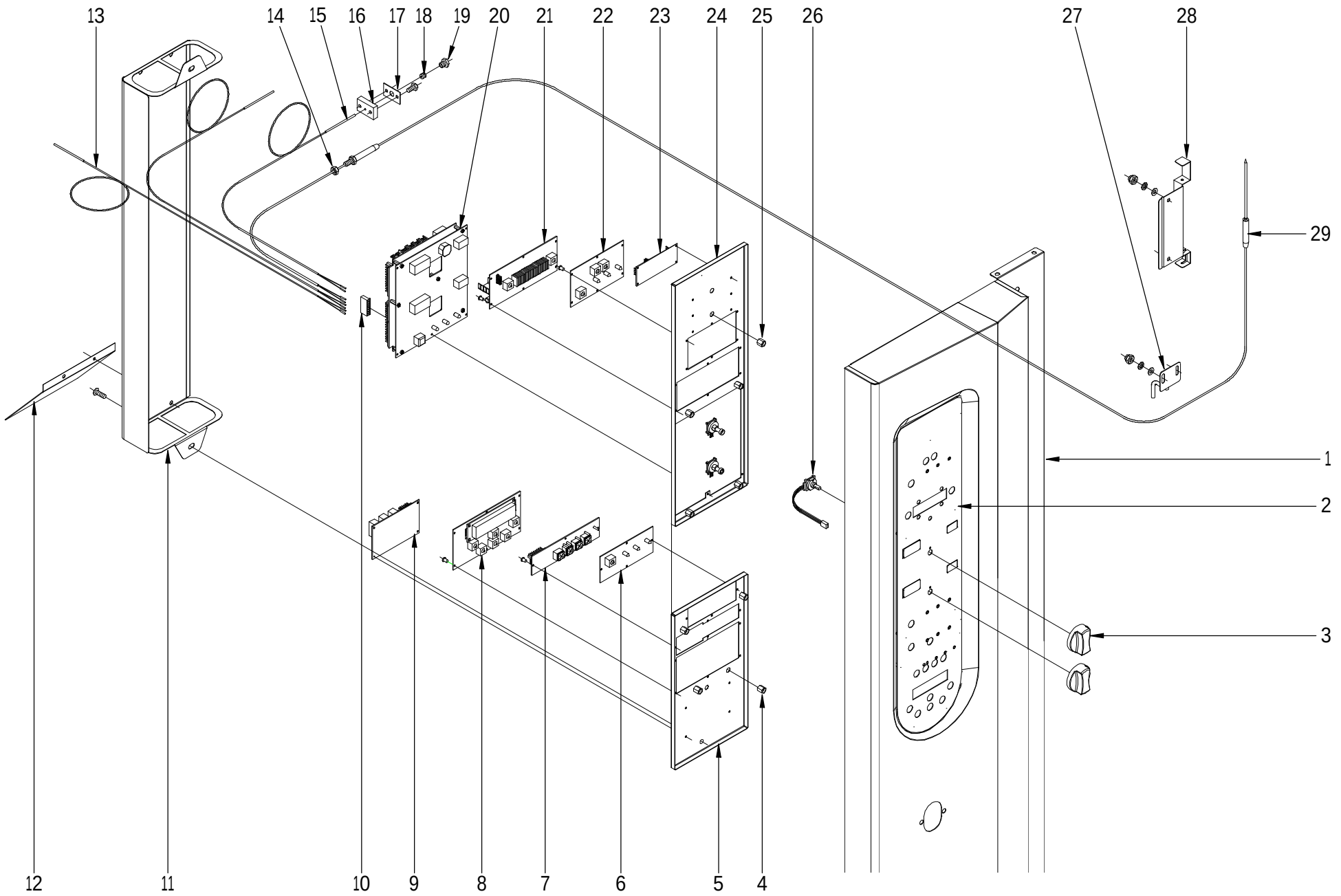

MOD.	HORNOS	ZONA	PARTE ELECTRICA PORTAMANDOS	PLANO	C-2032

ITEM	CODIGO	DENOMINACION	TEXTO	HGP-10/21	HGP 20/21						NOTAS
1	T302808000	PANEL PORTAMANDOS 10/21	CONTROL HOLDER PANEL 10/21	1	_						
1	T492800000	PANEL PORTAMANDOS COM 20/21	COM CONTROL HOLDER PANEL	_	1						
	Q412005000	REMACHE AVINOX Ø3,2x6mm	RIVET AVINOX Ø3.2x6mm	44	44						
	P613014000	TAPON PUERTO SERIE PROG.	PROG. SERIES PORT PLUG.	1	1						
2	T363001000	SERIGRAFIA HGP-10-11 10-21	SERIGRAPHY HGP-10-11 10-21	1	1						
3	T303011000	BOTÓN DE MANDO COMPLETO	COMPLETE CONTROL BUTTON	2	2						
4	T302829000	DISTANCIADOR COMPONENTES	SPACER COMPONENTS	4	4						
	Q232030000	ARANDELA A5	WASHER A5	4	4						
	Q242030000	ARANDELA ABANICO A5 A.304	FAN WASHER A5 A.304	4	4						
	Q163030000	TUERCA EXAGONAL M5 LATON	HEXAGONAL NUT M5 BRASS	4	4						
5	T332805000	SOP. CIRCUITOS PROGRAMADOR	SUPPORT CIRCUIT PROGRAMME	1	1						
6	T333002000	CIRCUITO SELECTOR VELOCIDAD	SPEED SELECTOR CIRCUIT	1	1						
7	T303019000	CIRCUITO TECLADO HGV	HGV KEYBOARD CIRCUIT	1	1						
	R663036000	FIJACION CIRCUITO	CIRCUIT ATTACHMENT	12	12						
8	T333015000	CIRCUITO PROGRAMADOR 2008	PROGRAMMER CIRCUIT 2008	1	1						
9	T333006000	CIRC. SELEC. VELOCIDAD RELES	SPEED SELECTOR CIRCUIT REL	1	1						
10	T303045000	CONECTOR PASO 3,96 MM. 8 VIAS	STEP CONNECTOR 3.96 MM. 8 W	1	1						
11	T333013000	PROTECCION CIRCUITOS	CIRCUIT PROTECTION	1	1						
	T323027000	PTC ELECTROVALVULA 5 SEG	PTC SOLENOID VALVE 5 SEC	1	1						
	Q242030000	ARANDELA ABANICO A5 A.304	FAN WASHER A5 A.304	1	1						
	Q012031000	TORNILLO EXAGONAL M5x10 A304	HEXAGONAL BOLT M5x10 A304	1	1						
	Q221342000	REMACHE EXAGONAL M5	HEXAGONAL RIVET M5	1	1						
12	T333014000	CHAPA DIRECCIONAMIENTO AIRE	AIR GUIDE PLATE	1	_						
13	T323024000	CONJ. TERMOPAR VAPOR 10/21	STEAM THERMOCOUPLE UNIT 1(	2	2						
14	Q162050000	TUERCA EXAGONAL M8x1 INOX.	HEXAGONAL NUT M8x1 INOX.	1	1						
15	T323011000	CONJUNTO TERMOPAR CAMARA	THERMOCOUPLE UNIT CHAMBEI	1	1						
16	T112625000	BASE CIERRE SONDA	PROBE LOCK BASE	1	1						
17	R692812000	JUNTA PASAMUROS SIMPLE	SIMPLE FEEDTHROUGH SEAL	1	1						
	Q012021000	TORNILLO EXAGONAL M4x10	HEXAGONAL BOLT M4x10	2	2						
18	R662652000	BICONO CIERRE SONDA	PROBE CLOSING BICONE	1	1						
19	R662629000	RACORD CIERRE SONDA	PROBE CLOSING CONNECTION	1	1						

MOD.	HORNOS	ZONA	PARTE ELECTRICA PORTAMANDOS	PLANO	C-2032

ITEM	CODIGO	DENOMINACION	TEXTO	HGP-10/21	HGP 20/21						NOTAS
20	T303070000	CONTROLADOR MEDIA ALTA 2008	MEDIUM HIGH CONTROLLER 200	1	1						
21	T323013000	CIRCUITO CONTROL HUMEDAD	HUMIDITY CONTROL CIRCUIT	1	1						
22	T333003000	CIRCUITO SELECTOR MODO	MODE SELECTOR CIRCUIT	1	1						
23	T303049000	CIRCUITO S.N.M.P.	S.N.M.P. CIRCUIT	1	1						
24	T332804000	SOPORTE PROGRAM COMPLETO	COMPLETE PROGRAMME SUPPO	1	1						
25	T302829000	DISTANCIADOR COMPONENTES	SPACER COMPONENTS	5	5						
	Q232030000	ARANDELA A5	WASHER A5	4	4						
	Q242030000	ARANDELA ABANICO A5 A.304	FAN WASHER A5 A.304	4	4						
	Q163030000	TUERCA EXAGONAL M5 LATON	HEXAGONAL NUT M5 BRASS	4	4						
26	T303022000	SELECTOR ENCODER	ENCODER SELECTOR	2	2						
	Z953041000	TUERCA M.10x1 EGO 00.00600.075	NUT M.10x1 EGO 00.00600.075	2	2						
27	T302646000	TENSOR PINCHO COMPLETO	COMPLETE SPIKE TENSOR	1	1						
	Q232030000	ARANDELA A5	WASHER A5	2	2						
	Q242030000	ARANDELA ABANICO A5 A.304	FAN WASHER A5 A.304	2	2						
	Q162030000	TUERCA EXAGONAL M5	HEXAGONAL NUT M5	2	2						
28	T302644000	SOPORTE SONDA	PROBE SUPPORT	1	1						
	Q232030000	ARANDELA A5	WASHER A5	2	2						
	Q242030000	ARANDELA ABANICO A5 A.304	FAN WASHER A5 A.304	2	2						
	Q162030000	TUERCA EXAGONAL M5	HEXAGONAL NUT M5	2	2						
29	T333004000	CONJUNTO SONDA NUCLEO 6 P.	CORE PROBE UNIT 6 P.	1	1						

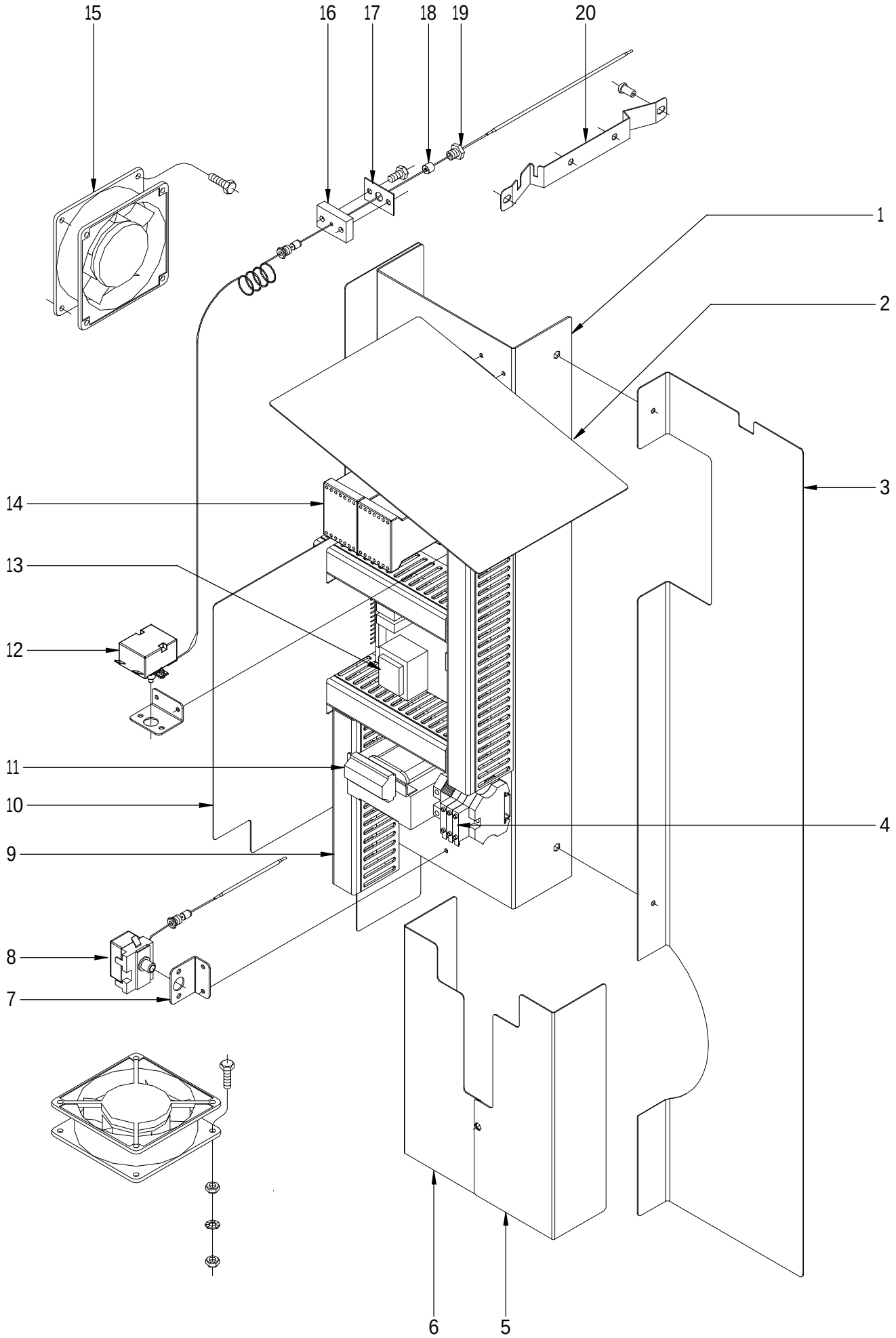

N plano	Firma	Fecha	Aparato		Lamina	
C-2033		2008-04	CUADRO ELECTRICO HORNO HGP-10/21		14	Fagor Industrial S.Coop. Oñate

MOD.	HORNOS	ZONA	CUADRO ELECTRICO	PLANO	C-2033

ITEM	CODIGO	DENOMINACION	TEXTO	HGP-10/21							NOTAS
1	T303064000	CHAPA CUADRO 10-21 GAS	SQUARE PLATE 10-21 GAS	1							
	Q221342000	REMACHE EXAGONAL M5	HEXAGONAL RIVET M5	2							
	Q012032000	TORNILLO EXAGONAL M5x15 A304	HEXAGONAL BOLT M5x15 A304	2							
	Q242030000	ARANDELA ABANICO A5 A.304	FAN WASHER A5 A.304	2							
	Q302022000	ARANDELA 16x6x1,2 A.304	WASHER 16X6X1.2 A.304	2							
2	T303062000	CHAPA DIREC. AIRE SUPER. INCL	UPPER AIR DIREC. PLATE INCL	1							
3	T303060000	CHAPA DIREC. AIRE CUBA	TUB AIR DIREC. PLATE	1							
4	R073005000	BORNAS PORTA FUSIBLES	FUSE HOLDER TERMINALS	3							
	Z263302000	BORNA DE PASO AZUL	BLUE THROUGH TERMINAL	1							
	P453026000	BORNE TIER 10 WPE-10103.O	TERMINAL TIER 10 WPE-10103.O	1							
	Z263303000	TOPE FINAL	END STOP	1							
	Z683068000	SEÑALIZ.DEK-6WEIDMULLER	SIGNS DEK-6WEIDMULLER	1							
	R723015000	FUSIBLE CRISTAL 10A.	GLASS FUSE 10A.	3							
	Z123018000	GUIA CONTACTOR L-55	CONTACTOR GUIDE L-55	1							
	Q221341000	REMACHE EXAGONAL M4	HEXAGONAL RIVET M4	2							
	Q012021000	TORNILLO EXAGONAL M4x10 A304	HEXAGONAL BOLT M4x10 A304	2							
5	T303069000	CHAPA DIREC. AIRE QUEM. DCHO.	BURNER AIR DIREC. PLATE RIGH	1							
6	T303068000	CHAPA DIREC. AIRE QUEM. IZDO.	BURNER AIR DIREC. PLATE LEFT	1							
	Q221342000	REMACHE EXAGONAL M5	HEXAGONAL RIVET M5	1							
	Q152004000	TORNILLO APLAST.M5X13 A 304	MUSHROOM HEAD BOLT M5X13	1							
7	R343039000	SOPORTE TERMOS VAPOR	STEAM THERMOSTAT SUPPORT	2							
8	Z953035000	TERMOSTATO LIMITADOR AVISO	LIMITER THERMOSTAT WARNIN(	1							
	Z953041000	TUERCA M.10x1 EGO 00.00600.075	NUT M.10x1 EGO 00.00600.075	1							
9	3715520000	CANALETA UNEX 60.30.77 / 0,12	PIPING UNEX 60.30.77 / 0.12	5							
10	T303063000	CHAPA DIREC. AIRE VERTICAL	VERTICAL AIR DIREC. PLATE	1							
11	R503005000	TRANSFORMADOR	TRANSFORMER	1							
	Z103084000	GUIA CONTACTOR L-138 "	CONTACTOR GUIDE L-138 "	2							
	Q221341000	REMACHE EXAGONAL M4	HEXAGONAL RIVET M4	4							
	Q012021000	TORNILLO EXAGONAL M4x10 A304	HEXAGONAL BOLT M4x10 A304	4							
12	T303009000	TERMOSTATO LIMITADOR	THERMOSTAT LIMITER	1							

MOD.	HORNOS	ZONA	CUADRO ELECTRICO	PLANO	C-2033

ITEM	CODIGO	DENOMINACION	TEXTO	HGP-10/21							NOTAS
13	T303048000	VARIADOR HORNO GAS 4V	GAS 4V OVEN VARIATOR	1							
	T133007000	DISTANCIADOR M3	SPACER M3	4							
	T133008000	TORNILLO AMARRE M3	ANCHORING SCREW M3	4							
	Q161310000	TUER.EXA.M3 H.ZINCADA	HEX.SCREW.M3 H.ZINC	4							
14	Z743009000	CONTAC. SIRIUS 3RT10 16-2AP02	CONTACT. SIRIUS 3RT10 16-2AP(	2							
	T303053000	UNION CONTACTORES DE INVER.	INVER. CONTACTOR UNION	1							
15	Z103066000	VENTILADOR 230V.50-60HZ	FAN 230V.50-60HZ	2							
	Q242020000	ARANDELA ABANICO A4 A.304	FAN WASHER A4 A.304	4							
	Q012021000	TORNILLO EXAGONAL M4x10 A304	HEXAGONAL BOLT M4x10 A304	6							
	Q162020000	TUERCA EXAGONAL M4	HEXAGONAL NUT M4	4							
S/Nº	T113015000	PROTECCION VENTILADOR	FAN PROTECTION	1							
	Q418022000	REMACHE DE NYLON 4x15	NYLON RIVET 4x15	4							
16	T112625000	BASE CIERRE SONDA	PROBE LOCK BASE	1							
17	R692812000	JUNTA PASAMUROS SIMPLE	SIMPLE FEEDTHROUGH SEAL	1							
	Q012021000	TORNILLO EXAGONAL M4x10	HEXAGONAL BOLT M4x10	2							
18	R662662000	JUNTA CIERRE BULBO LIMITADOR	BULB LIMITER CLOSING SEAL	1							
19	R662629000	RACORD CIERRE SONDA	PROBE CLOSING CONNECTION	1							
20	R662683000	SOPORTE BULBO	BULB SUPPORT	1							
	Q412002000	REMACHE AVINOX Ø4x10mm	RIVET AVINOX Ø4x10mm	3							

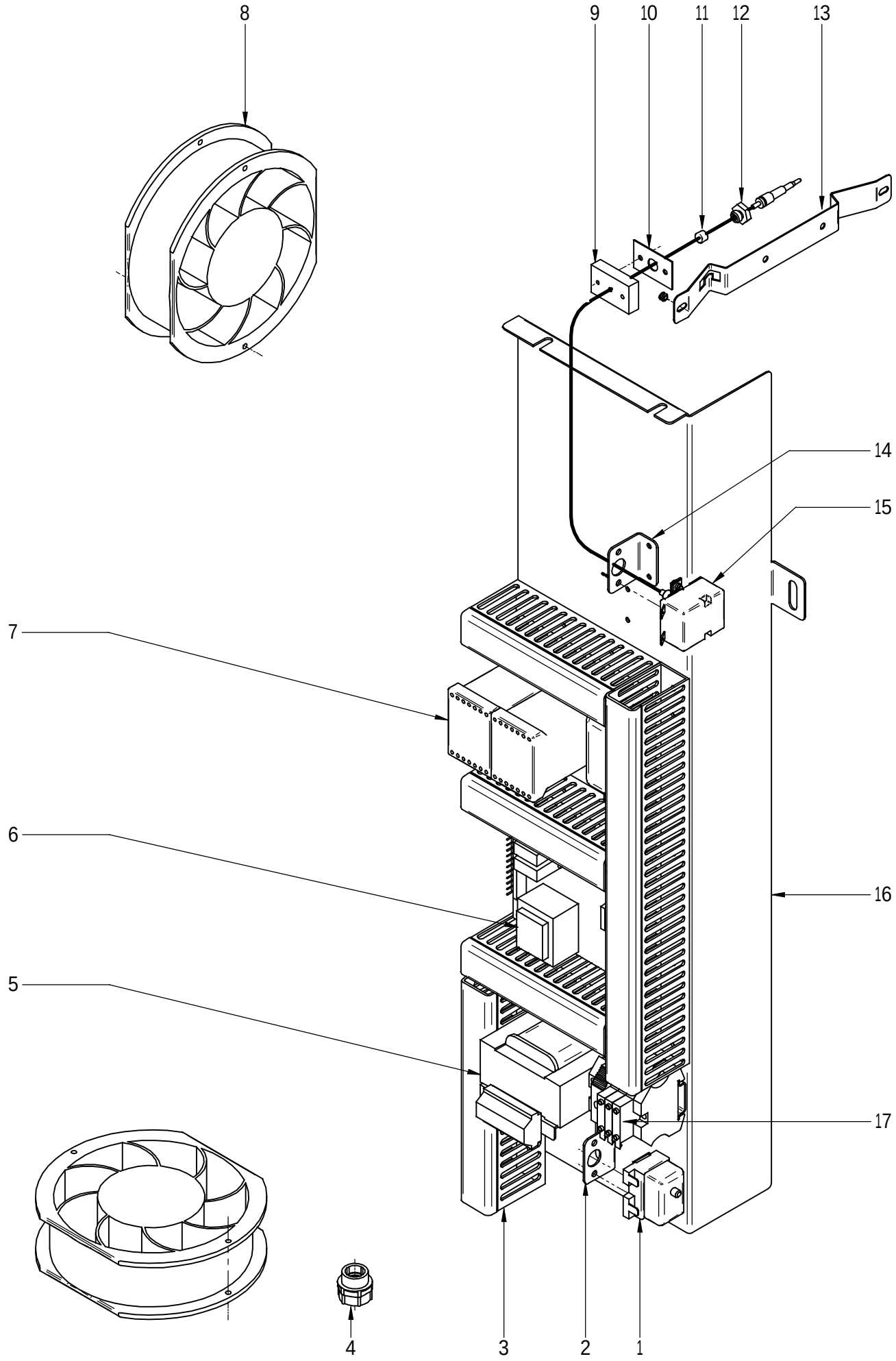

N plano	Firma	Fecha	Aparato		Lamina	
C-2034		2008-04	CUADRO ELECTRICO HORNO HGP- 20/21		15	Fagor Industrial S.Coop. Oñate

MOD.	HORNOS	ZONA	CUADRO ELECTRICO	PLANO	C-2034

ITEM	CODIGO	DENOMINACION	TEXTO	HGP 20/21							NOTAS
1	Z953035000	TERMOSTATO LIMITADOR AVISO	LIMITER THERMOSTAT WARNIN(	1							
2	R343039000	SOPORTE TERMOS VAPOR	STEAM THERMOSTAT SUPPORT	1							
3	3715520000	CANALETA UNEX 60.30.77 / 0,35	PIPING UNEX 60.30.77 / 0.35	1							
3	3715520000	CANALETA UNEX 60.30.77 / 0,15	PIPING UNEX 60.30.77 / 0.15	1							
3	3715520000	CANALETA UNEX 60.30.77 / 0,15	PIPING UNEX 60.30.77 / 0.15	1							
3	3715520000	CANALETA UNEX 60.30.77 / 0,15	PIPING UNEX 60.30.77 / 0.15	1							
3	3715520000	CANALETA UNEX 60.30.77 / 0,20	PIPING UNEX 60.30.77 / 0.20	1							
4	R073004000	PRENSA ESTOPAS	STUFFING BOX	1							
	R073025000	CONTRATUERCA (GAES)790.1300	COUNTERNUT (GAES) 790.1300	1							
	R073026000	JUNTA GOMA (GAES)	RUBBER SEAL (GAES)	1							
5	R503005000	TRANSFORMADOR	TRANSFORMER	1							
	Q221341000	REMACHE EXAGONAL M4	HEXAGONAL RIVET M4	4							
	Q012021000	TORNILLO EXAGONAL M4x10 A.304	HEXAGONAL BOLT M4X10 A.304	4							
6	T303048000	VARIADOR HORNO GAS 4V	GAS 4V OVEN VARIATOR	1							
	T133007000	DISTANCIADOR M3	SPACER M3	4							
	T133008000	TORNILLO AMARRE M3	ANCHORING SCREW M3	4							
	Q161310000	TUER.EXA.M3 H.ZINCADA	HEX.SCREW.M3 H.ZINC	4							
7	Z743009000	CONT.SIRIUS 3RT10 16-2AP02	SIRIUS CONT. 3RT10 16-2AP02	2							
	T303053000	UNION CONTACTORES DE INVER.	INVER. CONTACTOR UNION	1							
	Z403016000	GUIA CONTACTOR L-100	CONTACTOR GUIDE L-100	1							
	Q221341000	REMACHE EXAGONAL M4	HEXAGONAL RIVET M4	2							
	Q012021000	TORNILLO EXAGONAL M4x10 A.304	HEXAGONAL BOLT M4X10 A.304	2							
8	T453005000	VENTILADOR 230V. 20/21	FAN 230V. 20/21	2							
	Q242020000	ARANDELA ABANICO A4 A.304	FAN WASHER A4 A.304	8							
	Q012021000	TORNILLO EXAGONAL M4x10 A304	HEXAGONAL BOLT M4x10 A304	8							
	Q162020000	TUERCA EXAGONAL M4	HEXAGONAL NUT M4	8							
9	T112625000	BASE CIERRE SONDA	PROBE LOCK BASE	1							
10	R692812000	JUNTA PASAMUROS SIMPLE	SIMPLE FEEDTHROUGH SEAL	1							
	Q012021000	TORNILLO EXAGONAL M4x10 A.304	HEXAGONAL BOLT M4X10 A.304	4							
	R662652000	BICONO CIERRE SONDA	PROBE CLOSING BICONE	1							
11	R662662000	JUNTA CIERRE BULBO LIMITADOR	BULB LIMITER CLOSING SEAL	1							

MOD.	HORNOS	ZONA	CUADRO ELECTRICO	PLANO	C-2034

ITEM	CODIGO	DENOMINACION	TEXTO	HGP 20/21							NOTAS
12	R662629000	RACORD CIERRE SONDA	PROBE CLOSING CONNECTION	2							
13	R662683000	SOPORTE BULBO	BULB SUPPORT	1							
	Q412002000	REMACHE AVINOX Ø4x10mm	RIVET AVINOX Ø4x10mm	3							
14	R343039000	SOPORTE TERMOS VAPOR	STEAM THERMOSTAT SUPPORT	1							
15	T303009000	TERMOSTATO LIMITADOR 10/21	THERMOSTAT LIMITER 10/21	1							
	Z953041000	TUERCA M.10x1 EGO 00.00600.075	NUT M.10x1 EGO 00.00600.075	1							
16	T493015000	CHAPA CUADRO 2021 GAS	SQUARE PLATE 2021 GAS	1							
	Q262040000	ARAND.GROW. A6 A.304	WASHER GROW. A6 A.304	2							
	Q162040000	TUERCA EXAGONAL .M6	HEXAGONAL NUT M6	2							
	Q221342000	REMACHE EXAGONAL M.5	HEXAGONAL RIVET M.5	2							
	Q242030000	ARANDELA ABANICO A5 A.304	FAN WASHER A5 A.304	2							
	Q012032000	TORNILLO EXAGONAL M5x15	HEXAGONAL BOLT M5x15	2							
17	P453026000	BORNE TIERRA 10 WPE-10103.O	EARTH TERMINAL 10 WPE-10103	1							
	Z263302000	BORNA DE PASO AZUL	BLUE THROUGH TERMINAL	1							
	R073005000	BORNAS PORTA FUSIBLES	FUSE HOLDER TERMINALS	3							
	Z263303000	TOPE FINAL	END STOP	1							
	Z123018000	GUIA CONTACTOR L-55	CONTACTOR GUIDE L-55	1							
	Q221341000	REMACHE EXAGONAL M4	HEXAGONAL RIVET M4	2							
	Q012021000	TORNILLO EXAGONAL M4x10 A.304	HEXAGONAL BOLT M4X10 A.304	2							

MOD.	HORNOS	ZONA	VARIOS	PLANO	

ITEM	CODIGO	DENOMINACION	TEXTO	HGP-10/21	HGP 20/21						
	T306500000	MANUAL DE INSTRUC. ESPAÑOL	INSTRUCTION MANUAL SPANISH	1	1						
	T306501000	MANUAL DE INSTRUC. ALEMAN	INSTRUCTION MANUAL GERMAN	1	1						
	T306502000	MANUAL DE INSTRUC. FRANCES	INSTRUCTION MANUAL FRENCH	1	1						
	T306503000	MANUAL DE INSTRUC. INGLES	INSTRUCTION MANUAL ENGLISH	1	1						
	T306504000	MANUAL DE INSTRUC. ITALIANO	INSTRUCTION MANUAL ITALIAN	1	1						
	T303038000	ESQUEMA TEORICO HGV 10-21	THEORETICAL DIAGRAM HGV 10	1	_						PLANO HC-76902
	T493000900	ESQUEMA TEORICO HVC 20/21	THEORETICAL DIAGRAM HVC 20	_	1						PLANO HC-77961
	T303057000	PLANO MONTAJE HGV	ASSEMBLY PLAN HGV	1	1						PLANO HD-12962
	T303042000	LEYENDA HORNOS	OVEN LEGEND	1	1						PLANO HC-76970
	T303028000	CABLEADO CONTROLAD. CIRC.LE	CONTROLLED WIRING LE CIRCU	1	1						
	T303030000	CABLEADO CONTROL-POTENCIO.	CONTROL WIRING- POTENTIOMI	1	1						
	T303031000	CABLEA. LUZ INTERIOR HVG10-21	INTERIOR LIGHT WIRING HVG 1(	1	_						
	T493010000	CABLEADO LUZ INTERIOR 20-21	INTERIOR LIGHT WIRING 20-21	_	1						
	T303056000	INSTALACION ELECTR. HGP 10-21	ELEC. INSTALLATION HGP 10-21	1	_						
	T493008000	INSTALACION ELECTR. HGV 20-21	ELEC. INSTALLATION HGV 20-21	_	1						
	T303034000	CABL ENCEND CAMARA 10/21 GAS	CHAMBER IGNITION WIRING 10/2	1	_						
	T493012000	CABL.ENCENDIDO CAMARA 20-21	CHAMBER IGNITION WIRING 20-2	_	1						
	T303035000	CABLE DETEC LLAMA CAMA. 10-21	CHAMBER FLAME DETECTION C/	1	_						
	T493013000	CABL.DETEC LLAMA CAMARA 20-21	CHAMBER FLAME DETECTION W	_	1						
	T303036000	CABLE ENCENDIDO CALDERA	BOILER IGNITION WIRING	1	1						
	T303037000	CABLE DETC. LLAMA CALD. 10-21	BOILER FLAME DETECTION CAB	1	_						
	T493014000	CABLE. DETECT.LLAMA CALDERA	CABLE. BOILER FLAME DETECT.	_	1						
	T303058000	CABLEADO VAR-SOPL HGV 10-21	WIRING VAR-SOPL HGV 10-21	1	_						
	T493011000	CABLEADO VARI.SOPL. HGV 20-21	WIRING VARI.SOPL. HGV 20-21	_	1						
	T333010000	CABLEADO CIRCUITO SNMP	CIRCUIT WIRING SNMP	1	1						
	T333009000	CABLEADO LAVADO HEP	WASH WIRING HEP	1	1						
	T333008000	CABLEADO SELECT. MODO HEP	MODE SEL. WIRING HEP	1	1						
	T333007000	CABLEADO SEL. VELOCIDAD HEP	SPEED SEL. WIRING HEP	1	1						
	T303029000	CABLEADO CONTROL-PROGRAMAD	CONTROL WIRING- PROGRAMMI	2	2						
	T303050000	MEMORY CARD HACCP	MEMORY CARD HACCP	1	1						

MOD.	HORNOS	ZONA	VARIOS	PLANO	

ITEM	CODIGO	DENOMINACION	TEXTO	HGP-10/21	HGP 20/21						
	T303052000	CAB. CONTRLDR-CONCTR HACCP	CAB.CONTROL-CONCTR HACCP	1	1						
	T303067000	CD HACCP	CD HACCP	1	1						
	T306513000	MANUAL INSTAL. Y USO HACCP	MANUAL INSTAL. AND USE HACC	1	1						
	EA62080010	DETERGENTE BOOST 8 KG.	DETERGENTE BOOST 8 KG.	1	1						

MOD.	HORNOS	ZONA	CAMBIOS A REALIZAR PARA OBTENER LA VERSION GAS NATURAL	PLANO	

ITEM	CODIGO	DENOMINACION	TEXTO	HGP-10/21	HGP 20/21						
		PIEZAS A ELIMINAR	**PARTS TO BE REMOVED**								
18	T305068000	TOBERA VK41 Ø4.8 (BUT-PROP.)	NOZZLE VK41 Ø4.8 (BUT-PROP.)	1	_						C-2031
18	T495032000	TOBERA VK41 Ø5.25 (BUT-PROP.)	NOZZLE VK41 Ø5.25 (BUT-PROP.	_	1						C-2031
5	T303069000	CHAPA DIREC. AIRE QUEM. DCHO.	BURNER AIR DIREC. PLATE RIGH	1	_						C-2033
		PIEZAS A INTRODUCIR	**PARTS TO BE INCLUDED**								
S/Nº	Z956104000	INYECTOR 1.1 A-15009 (ITEM 35)	INJECTOR 1.1 A-15009 (ITEM 35)	12	24						C-2030
18	T305069000	TOBERA VK41 Ø6 (GAS NATURAL)	NOZZLE VK41 Ø6 (GAS NATURAL	1	_						C-2031
18	T495033000	TOBERA VK41 Ø7 (GAS NATURAL)	NOZZLE VK41 Ø7 (GAS NATURAL	_	1						C-2031

MOD.	HORNOS	ZONA	CAMBIOS PARA PASAR DE (380-415V. 50Hz) A (220V. 60Hz)	PLANO	

ITEM	CODIGO	DENOMINACION	TEXTO	HGP-10/21							
		PIEZAS A ELIMINAR	**PARTS TO BE REMOVED**								
2	T323022000	MOTOR 2V 400V	MOTOR 2V 400V	1							C-2027
22	T360715000	MOTOBOMBA 5213E2450 FIR 50Hz	MOTOR-PUMP 5213E2450 FIR 50	1							C-2029
21	Z220901000	BOMBA DESAGUE 30W	DRAINAGE PUMP 30W	1							C-2030
		PIEZAS A INTRODUCIR	**PARTS TO BE INCLUDED**								
S/Nº	T322607000	REDUCC. CUBREVENT. 60HzØ160	FANCOVER REDUC. 60HzØ160	1							C-2024
2	T323023000	MOTOR 2V 230V	MOTOR 2V 230V	1							C-2027
22	T360722000	MOTOBOMBA 5213E246X FIR 60Hz	MOTOR-PUMP 5213E246X FIR 60	1							C-2029
21	Z223501000	BOMBA DE DESAGUE 30W 60HZ	DRAINAGE PUMP 30W 60HZ	1							C-2030

HGV 10/21 HGP 10 / 21

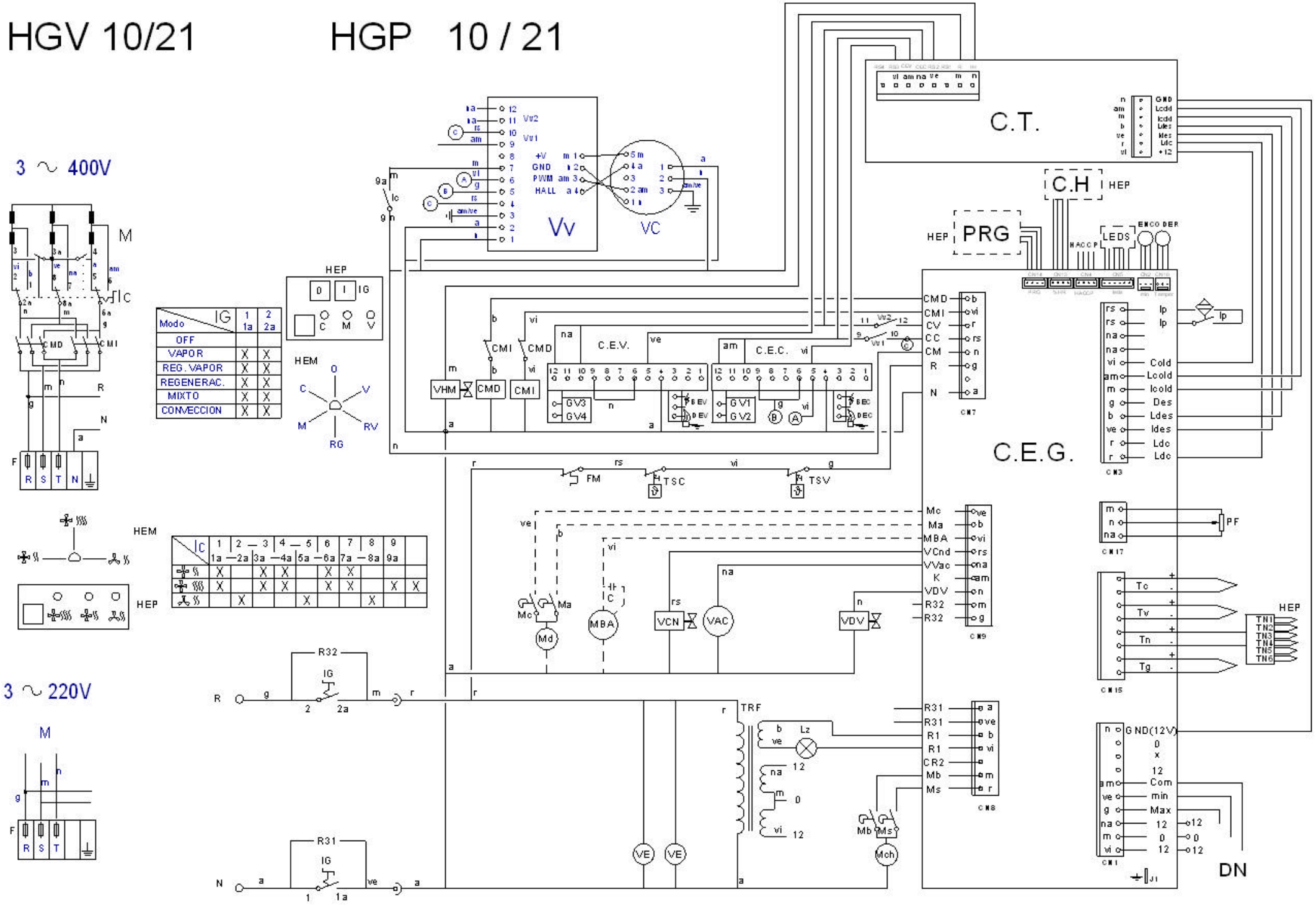

HGV 20/21 HGP 20 / 21

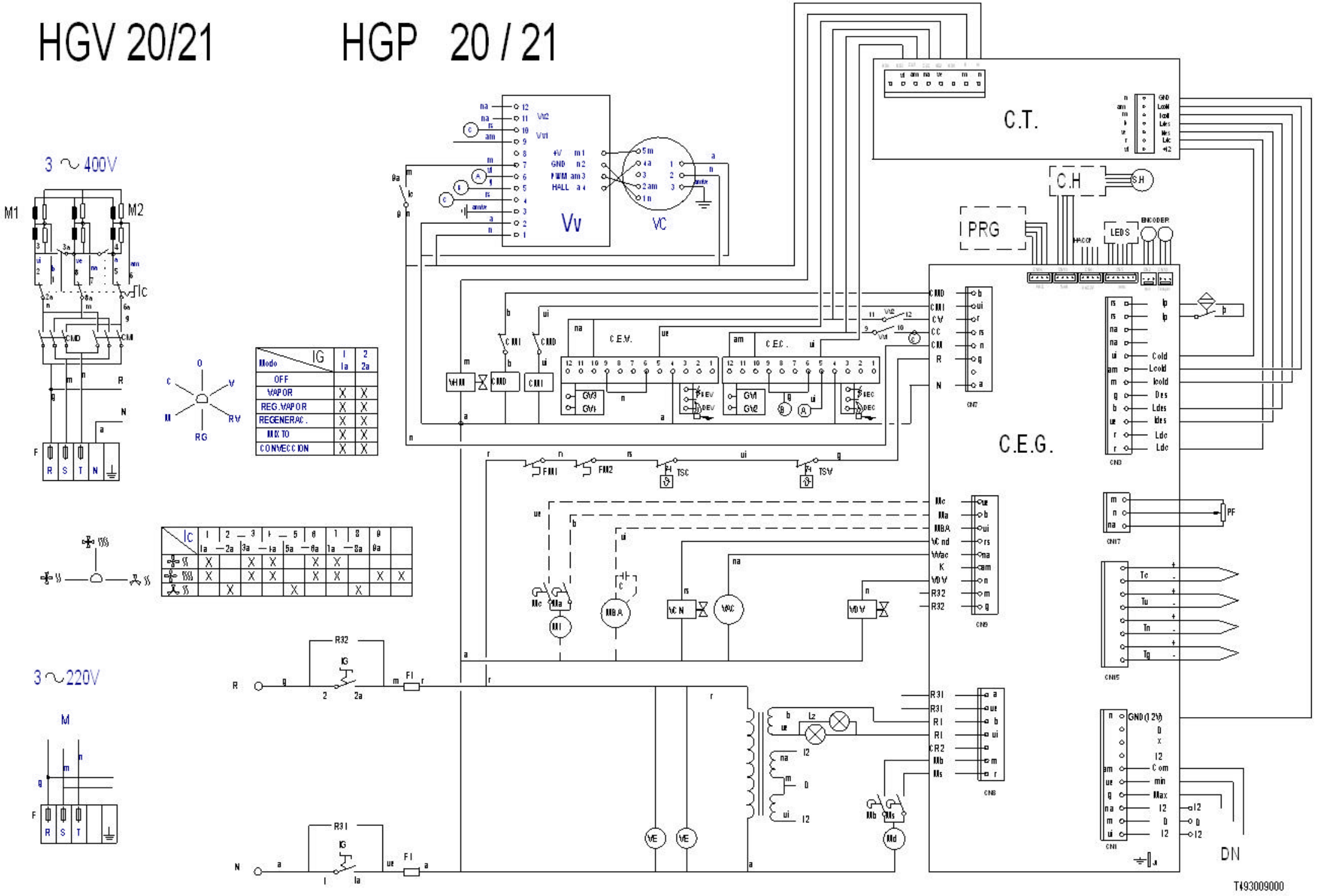

Modo \ IG	1 1a	2 2a
OFF		
VAPOR	X	X
REG.VAPOR	X	X
REGENERAC.	X	X
MIXTO	X	X
CONVECCION	X	X

IC	1 1a	2 — 2a	3 3a	4 — 4a	5 5a	6 — 6a	7 7a	8 — 8a	9 9a	
	X		X	X		X	X			
	X		X	X		X	X		X	X
		X			X			X		

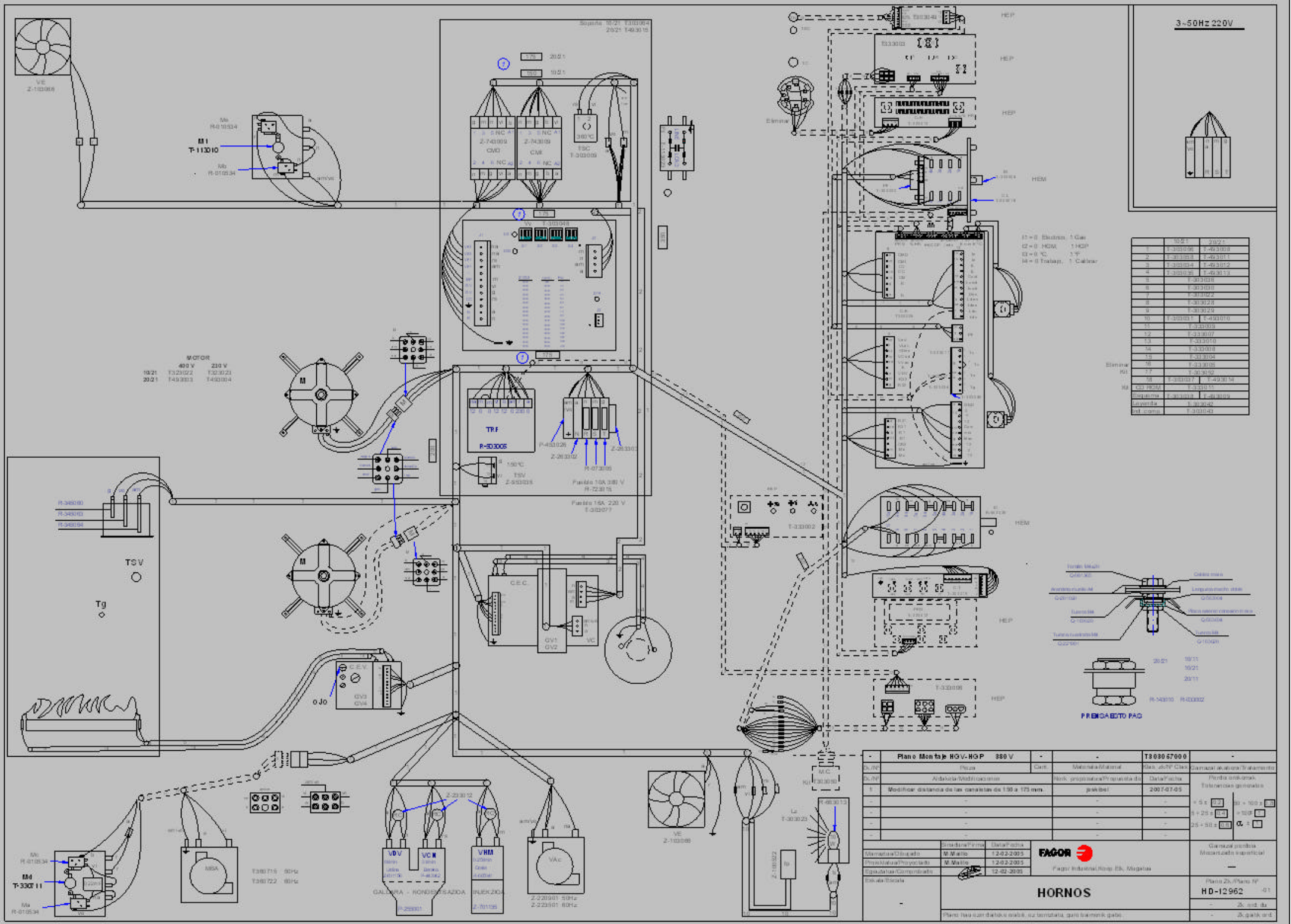
3~50Hz 220V
MOTOR
400 V
230 V
TRF
TSV
Tg
C.E.V.
C.E.C.
VDV
VCN
VHM
VAc
GALDARA - KONDENSAZIOA
INJEKZIOA
Z-220901 50Hz
Z-223501 60Hz
PRENSA ESTOPAS
HEP
HEM
Eliminar
Kit
CD ROM
Esquema
Leyenda
Ind. comp.
Plano Montaje HGV-HGP 380 V
T303057000
Modificar distancia de las canaletas de 150 a 175 mm.
Fagor Industrial,Koop.Elk, Mugatua
HORNOS
HD-12962
Plano hau ezin daiteke erabili, ez baimentzen, guri baimenik gabe.

	ESPAÑOL	FRANÇAIS	ENGLISH	DEUTSCH	ITALIANO
BEC :	Bujia Encendido Cámara	Bougie Allumage Chambre	Chamber Spark Plug	Zündkerze Einschalten Garraum	Candela di Accensione Camera
BEV :	Bujia Encendido Caldera	Bougie Allumage Chaudière	Boiler Spark Plug	Zündkerze Einschalten Boile	Candela di Accensione Caldaia
CEC :	Control Combustión Cámara	Contrôle Combustion Chambre	Chamber Combustion Control	Steuerung Verbrennung Garraum	Controllo Combustione Camera
CEG :	Control Electrónico General	Contrôle Electronique Général	Main Electronic Control	Steuerung Elektronik allgemein	Controllo Elettronico Generale
CEV :	Control Combustión Caldera	Contrôle Combustion Chaudière	Boiler Combustion Control	Steuerung Verbrennung Boiler	Controllo Combustione Caldaia
CH :	Circuito Humedad	Circuit Humidité	Humidity Circuit	Kreislauf Feuchtigkeit	Circuito Umidità
CL :	Circuito Leds	Circuit LEDs	Led Circuit	Kreislauf LEDs	Circuito Leds
CT :	Circuito Teclado	Circuit Clavier	Keypad Circuit	Kreislauf Tastatur	Circuito Tastiera
CC1,CC2 :	Contactor Resistencia Cámara	Contacteur Élément Chauffant Chambre	Chamber Heating Element Contactor	Schütz Heizwiderstand Garraum	Contattore Resistenza Camera
CMD :	Contactor Motor Derecha	Contacteur Moteur Droite	Right Engine Contactor	Schütz Motor rechts	Contattore Motore Destra
CMI :	Contactor Motor Izquierda	Contacteur Moteur Gauche	Left Engine Contactor	Schütz Motor links	Contattore Motore Sinistra
CR1 :	Rele Arranque	Relais Démarrage	Starting Relay	Relais Anlauf	Relè Accensione
CV1,CV2 :	Contactor Resistencias Caldera	Contacteur Élément Chauffant Chaudière	Boiler Heating Element Contactor	Schütz Heizwiderstand Boiler	Contattore Resistenza Caldaia
DEC :	Detector Llama Cámara	Détecteur Flamme Chambre	Chamber Flame Detector	Flammendetektor Garraum	Rilevatore di Fiamma Camera
DEV :	Detector Llama Caldera	Détecteur Flamme Chaudière	Boiler Flame Detector	Flammendetektor Boiler	Rilevatore di Fiamma Caldaia
DN :	Detector Nivel Caldera	Détecteur Niveau Chaudière	Boiler Level Detector	Pegeldetektor Boiler	Rilevatore Livello Caldaia
EM :	Encoder Selector Tiempo	Encodeur Sélecteur Temps	Time Selector Encoder	Encoder Zeitwahlschalter	Encoder Selettore Tempo
E°C :	Encoder Selector Temperatura	Encodeur Sélecteur Température	Temperature Selector Encoder	Encoder Temperaturwahlschalter	Encoder Selettore Temperatura
F :	Fusibles	Fusibles	Fuses	Sicherungen	Fusibili
FI :	Filtro Interferencias	Filtre Interférences	Interference Filter	Störungsfilter	Filtro Interferenze
FM :	Térmico Motor	Thermique Moteur	Thermal Engine	Thermoschalter Motor	Termico Motore
GV1,GV2 :	Electro válvula Gas Cámara	Électrovanne Gaz Chambre	Chamber Gas Solenoid Valve	Elektroventil Gas Garraum	Elettrovalvola Gas Camera
GV3,GV4 :	Electro válvula Gas Caldera	Électrovanne Gaz Chaudière	Boiler Gas Solenoid Valve	Elektroventil Gas Boiler	Elettrovalvola Gas Caldaia
IC :	Selector Velocidad Potencia	Sélecteur Vitesse Puissance	Power Speed Selector	Wahlschalter Geschwindigkeit Leistung	Selettore Velocità Potenza
IG :	Interruptor General	Interrupteur Général	Main Switch	Hauptschalter	Interruttore generale
IL :	Interruptor Seguridad Lavado	Interrupteur Sécurité Lavage	Washing Safety Switch	Sicherheitsschalter Waschen	Interruttore Sicurezza Lavaggio
Ip :	Interruptor Seguridad Puerta	Interrupteur Sécurité Porte	Door Safety Switch	Sicherheitsschalter Tür	Interruttore Sicurezza Porta
K1,K2,CR1,CR2:	Rele Resistencia	Relais Élément Chauffant	Heating Element Relay	Relais Heizwiderstand	Relè Resistenza
Lz :	Luz Interior	Eclairage Intérieur	Inner Light	Innenbeleuchtung	Luce Interna
M,M1,M2 :	Motor Turbina	Moteur Turbine	Turbine Engine	Motor Turbine	Motore Turbina
Mch :	Motor Chimenea	Moteur Cheminée	Stack Engine	Motor Abluftkamin	Motore Canna
Md :	Motor Válvula	Moteur vanne	Valve Engine	Motor Ventil	Motore Valvola
MBA :	Bomba Lavado	Pompe Lavage	Washing Pump	Waschenpumpe	Pompa lavaggio
Mb :	Interruptor Micro Bajada	Microrupteur Descente	Drop Microswitch	Mikroschalter Senken	Interruttore Micro Discesa
Ms :	Interruptor Micro Subida	Microrupteur Montée	Rise Microswitch	Mikroschalter Heben	Interruttore Micro Salita
PF :	Potenciómetro Selector Funciones	Potentiomètre Sélecteur Fonctions	Functions Selector Potentiometer	Potentiometer Funktionswahlschalter	Potenziometro Selettore Funzioni
PRG :	Programador	Programmateur	Programmer	Programmiervorrichtung	Programmatore
RC :	Resistencias Cámara	Éléments Chauffants Chambre	Chamber Heating Element	Heizwiderstände Garraum	Resistenze Camere
RV :	Resistencias Caldera	Éléments Chauffants Chaudière	Boiler Heating Element	Heizwiderstände Boiler	Resistenze Caldaia
Tc :	Sonda Cámara	Sonde Chambre	Chamber Probe	Sonde Garraum	Sonda Camera
TCN :	Termostato Condensación	Thermostat Condensation	Condensation Thermostat	Thermostat Kondensierung	Termostato Condensazione
Tg :	Sonda Caldera	Sonde Chaudière	Boiler Probe	Sonde Boiler	Sonda Caldaia
TH :	Sonda Humedad	Sonde Humidité	Humidity Probe	Sonde Feuchtigkeit	Sonda Umidità
Tn :	Sonda Núcleo	Sonde Noyau	Core Probe	Kerntemperaturmessonde	Sonda Nucleo
TRF :	Transformador	Transformateur	Transformer	Transformator	Trasformatore
TSC :	Termostato Seguridad Cámara	Thermostat Sécurité Chambre	Chamber Safety Thermostat	Sicherheitsthermostat Garraum	Termostato Sicurezza Camera
TSV :	Termostato Seguridad Caldera	Thermostat Sécurité Chaudière	Boiler Safety Thermostat	Sicherheitsthermostat Boiler	Termostato Sicurezza Caldaia
Tv :	Sonda Vapor	Sonde Vapeur	Steam Probe	Sonde Dampf	Sonda Vapore
VAC :	Bomba Vaciado	Pompe Vidange	Vacuum Pump	Ablasspumpe	Pompa scarico
VAcl :	Electro válvula Aclarado	Électrovanne Rinçage	Rinsing Solenoid Valve	Elektroventil Klarspülen	Elettrovalvola Risciacquo
VC :	Ventilador Soplante	Ventilateur Soufflant	Blowing Fan	Ventilator Gebläse	Ventilatore Soffiante
VCN :	Electro válvula Condensación	Électrovanne Condensation	Condensation Solenoid Valve	Elektroventil Kondensierung	Elettrovalvola Condensazione
VDV :	Electro válvula Llenado Caldera	Électrovanne Remplissage Chaudière	Chamber Filling Solenoid Valve	Elektroventil Füllung Boiler	Elettrovalvola di Riempimento Caldaia
VE :	Ventilador Cuadro Eléctrico	Ventilateur Tableau Électrique	Fan Switchboard	Ventilator Elektrotafel	Ventilatore Quadro Elettrico
VHM :	Electro válvula Humidificador	Électrovanne Humidificateur	Humidifier Solenoid Valve	Elektroventil Befeuchtungsvorrichtung	Elettrovalvola Umidificatore
VLav :	Electro válvula Lavado	Électrovanne Lavage	Washing Solenoid Valve	Elektroventil Waschen	Elettrovalvola Lavaggio
Vv :	Variador Velocidad	Variateur Vitesse	Speed Variator	Geschwindigkeitsregler	Variatore di Velocità
COLOR	COLORES	COULEURS	COLOUR	FARBEN	COLORE
Va :	Azul	Bleu	Blue	Blau	Blu
am :	Amarillo	Jaune	Yellow	Gelb	Giallo
am/ve :	Amarillo/Verde	Jaune / vert	Yellow /green	Gelb/grün	Giallo/Verde
b :	Blanco	Blanc	White	Weiß	Bianco
g :	Gris	Gris	Grey	Grau	Grigio
m :	Marrón	Marron	Brown	Braun	Marrone
n :	Negro	Noir	Black	Schwarz	Nero
na :	Naranja	Orange	Orange	Orange	Arancio
r :	Rojo	Rouge	Red	Rot	Rosso
rs :	Rosa	Rose	Pink	Rosa	Roseo
ve :	Verde	Vert	Green	Grün	Verde
vi :	Violeta	Violet	Purple	Violett	Viola