# SP 405 - 605

## Electronic modular flaker

**Spare parts list**
**Catalogo ricambi**
**Catalogues pièces détacheés**
**Ersatzteilenkatalog**

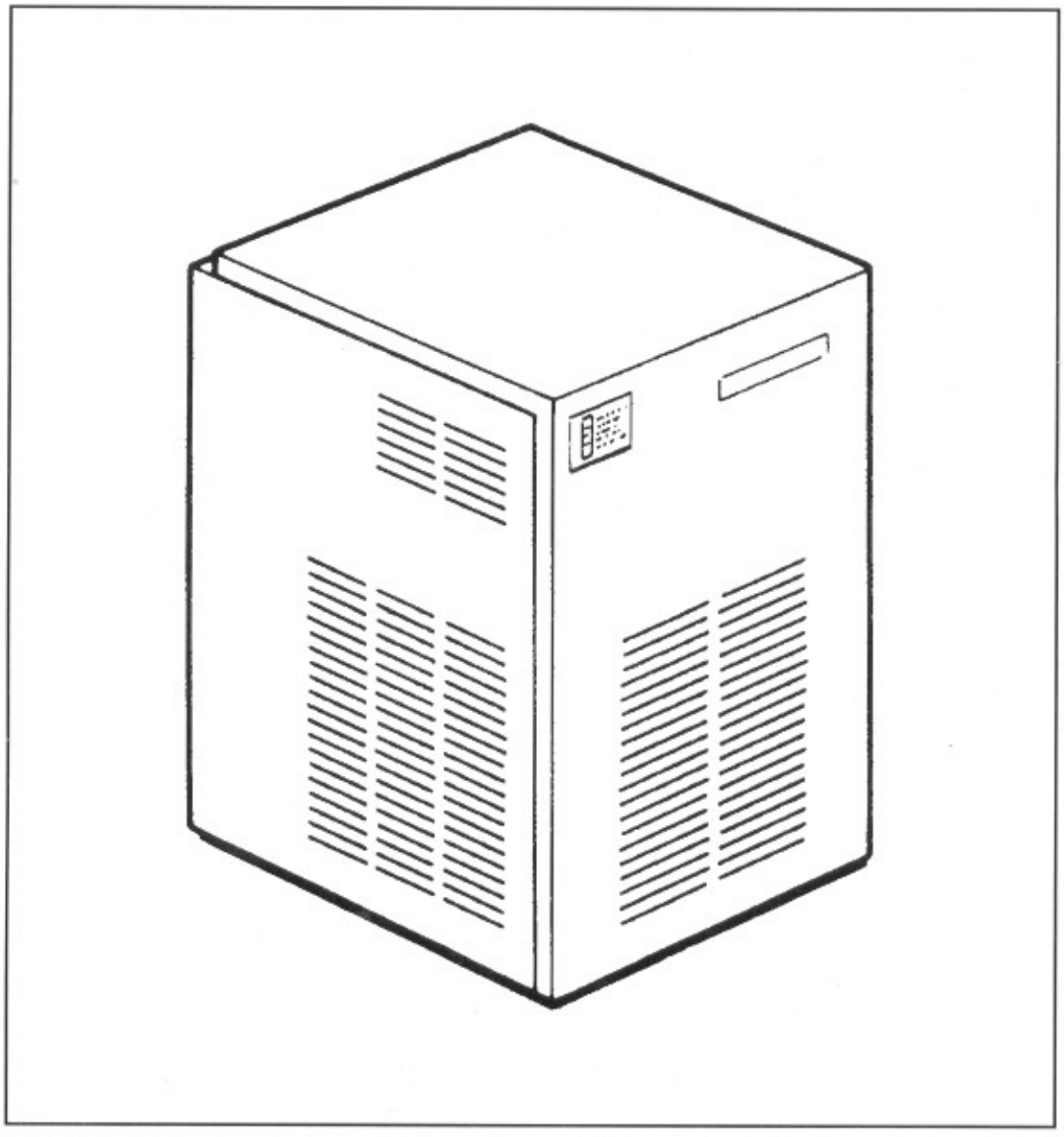

SIMAG

090090.00 REV. 09/93

| PAGE<br>PAGINA<br>PAGE<br>SEITE | TABLE OF CONTENTS | INDICE | TABLE DES MATIÉRES | INHALTVERZEICHNIS |
|---|---|---|---|---|
| 1 | TABLE OF CONTENTS | INDICE | TABLE DES MATIÉRES | INHALTVERZEICHNIS |
| 2-3 | UNIT PANELS | ASSIEME MOBILE | ENS. CARROSSERIE | MACHINENGEHAUSE |
| 4-5 | REFRIGERANT SYSTEM<br>AIR COOLED | SISTEMA REFRIGERANTE<br>RAFFR. AD ARIA | CIRCUIT FRIGORIFIQUE<br>REFROID. A AIR | GEFRIERSYSTEM<br>LUFTGEKÜHLT |
| 6-7 | REFRIGERANT SYSTEM<br>WATER COOLED | SISTEMA REFRIGERANTE<br>RAFFR. AD ACQUA | CIRCUIT FRIGORIFIQUE<br>REFROID. A EAU | GEFRIERSYSTEM<br>WASSERGEKÜHLT |
| 8-9 | WATER SYSTEM AND INSULATIONS | CIRCUITO IDRAULICO ED ISOLAMENTI | CIRCUIT HYDRAULIQUE ET INSULATIONS | WASSERKREISLAUF UND ISOLIERUNGEN |
| 10-11 | FREEZER AND GEAR REDUCER ASSY | ASSIEME FREEZER E RIDUTTORE | ENS. FREEZER ET MOTOREDUCTEUR | GEFRIERZYLINDER-GETRIEBEEINHEIT |
| 12-13 | P.C. BOARD AND<br>SENSORS ASSY | SCHEDA ELETTRONICA E<br>SENSORI | ENS. CARTE ELECTRONIQUE<br>ET DETECTEURS | ELEKTRONISCHE KARTE UND<br>TEMPERRATURFUEHLERENHEIT |
| 14 | COMPRESSOR AND ELECTRIC<br>COMPONENT CHARTS | TABELLA COMPRESSORI E<br>COMPONENTI ELETTRICI | LISTE DES COMPRESSEURS<br>ET COMPOSANTS ELECTRIQUE | KOMPRESSOR UND ELEKTRISCHE<br>BESTANDTEILE |

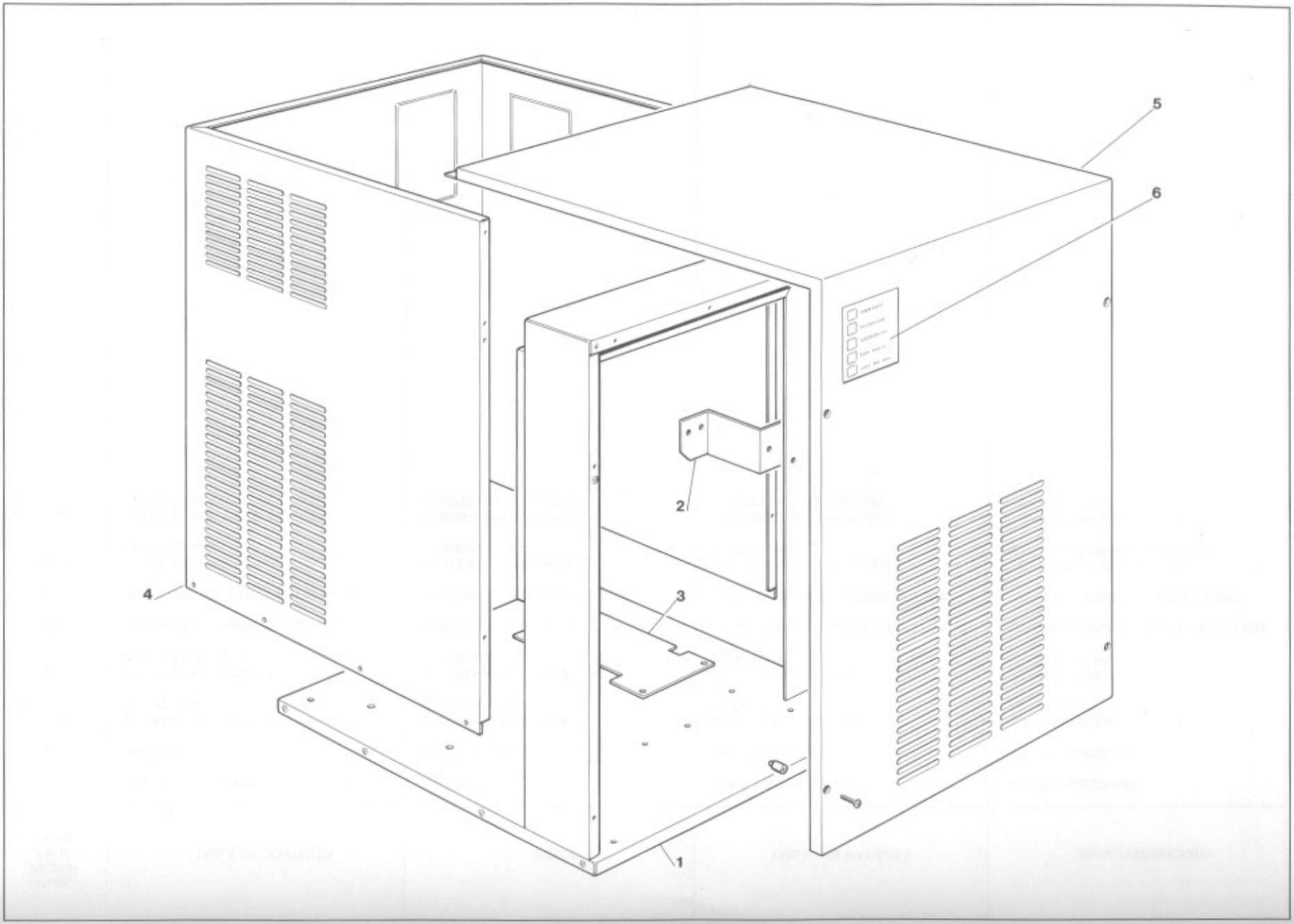
5
6
2
4
3
1

# SP 405 - SP 605 - UNIT PANELS - ASSIEME MOBILE - ENS. CARROSSERIE - MACHINE GEHAUSE

| ITEM NO<br>POS NO<br>REP. NO<br>REF. NO | PART NO - CODICE<br>REFERENCE - STUECK NR<br>SP 405 | <br><br><br>SP 605 | DESCRIPTION | DESCRIZIONE | DESIGNATION | BESCHREIBUNG |
|---|---|---|---|---|---|---|
| 1 | 781398 00 | 781398 00 | FRAME ASSY S.S. | ASSIEME TELAIO ACCIAIO INOX | ENSAMBLE CHASSIS ACIER INOX | CHASSISRAHMEN EDELSTAHL |
| 2 | 703221 00 | 703221 00 | WATER RESERVOIR BRACKET | SUPPORTO VASCH. GALLEGGIANTE | SUPPORT FLOTTEUR | SCHWIMMERHALTER |
| 3 | 704231 01 | 704231 01 | GEAR MOTOR BASE | SUPPORTO MOTORIDUTTORE | SUPPORT MOTOREDUCTEUR | GETRIEBEMOTORHALTER |
| 4 | 702133 03 | 702132 03 | SIDES/REAR PANEL S.S. | PANNELLO LATER./POSTER. ACC. INOX | PANNEAU COTE/ARRIERE ACIER INOX | EDELSTAHL SEITEN-RÜCKWAND |
| 5 | 702136 13 | 702136 17 | FRONT/TOP PANEL S.S. | PANNELLO FRONT./SUPER. ACCIAIO INOX | PANNEAU AVANT/SUP. ACIER INOX | EDELSTAHL FRONT-OBERWAND |
| 6 | 650624 12 | 650624 12 | LABEL | ADESIVO SEGNALETICO | ETIQUETTE | ETIKETT |

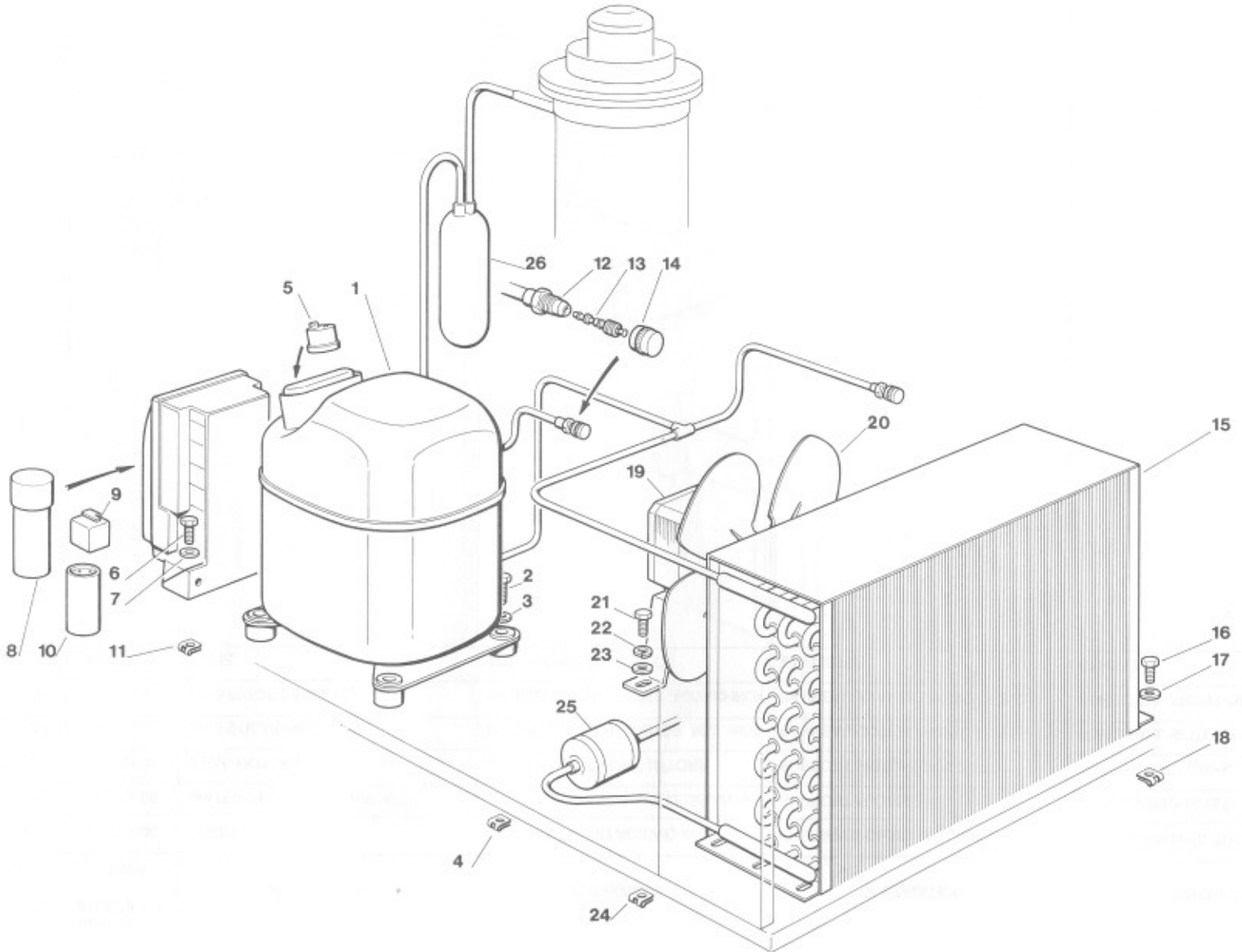
26
12
13
14
5
1
20
15
19
9
6
7
2
3
21
22
23
16
17
25
18
8
10
11
4
24

# SP 405 - SP 605 - REFRIGERANT SYSTEM AIR COOLED - SISTEMA REFRIGERANTE RAFFR. AD ARIA
## CIRCUIT FRIGORIFIQUE REFROID. PAR AIR - LUFTGEKÜHLT GEFRIERSYSTEM

| ITEM NO<br>POS NO<br>REP. NO<br>REF. NO | PART NO - CODICE<br>REFERENCE - STUECK NR<br>SP 405 | <br><br><br>SP 605 | DESCRIPTION | DESCRIZIONE | DESIGNATION | BESCHREIBUNG |
|---|---|---|---|---|---|---|
| 1 | 670076 10<br>***** | 670076 16<br>670076 18 | COMPRESSOR ASSY 220 V<br>COMPRESSOR ASSY 380 V | ASSIEME COMPRESSORE 220 V<br>ASSIEME COMPRESSORE 380 V | ENSAMBLE COMPRESSEUR 220 V<br>ENSAMBLE COMPRESSEUR 380 V | KOMPRESSOR 220 V<br>KOMPRESSOR 380 V |
| 2 | 420043 00 | 420043 00 | SCREW | VITE | VIS | SCHRAUBE |
| 3 | 440088 00 | 440088 00 | WASHER | RONDELLA | RONDELLE | SCHEIBE |
| 4 | 650407 01 | 650407 01 | METAL CLIP | DADO IN GABBIA | ECROU | MUTTER |
| 5 | 620058 44<br>***** | 620058 56<br>620058 58 | PROTECTOR 220 V<br>PROTECTOR 380 V | PROTETTORE 220 V<br>PROTETTORE 380 V | PROTECTEUR 220 V<br>PROTECTEUR 380 V | SCHUTZGERÄT 220 V<br>SCHUTZGERÄT 380 V |
| 6 | 420000 22 | 420000 22 | SCREW | VITE | VIS | SCHRAUBE |
| 7 | 440026 00 | 440026 00 | WASHER | RONDELLA | RONDELLE | SCHEIBE |
| 8 | 620167 21 | 620167 16 | RUN CAPACITOR 220 V | CAPACITA DI MARCIA 220 V | CAPACITÉ PERMANENCE 220 V | BETRIEB KONDENSATOR 220 V |
| 9 | 620168 11 | 620168 11 | START RELAY 220 V | RELE DI AVVIAMENTO 220 V | RELAIS DE DEMARRAGE 220 V | RELAIS 220 V |
| 10 | 620167 22 | 620167 22 | START CAPACITOR 220 V | CAPACITA D'AVVIAMENTO 220 V | CAPACITÉ DE DEMARRAGE 220 V | START KONDENSATOR 220 V |
| 11 | 650029 03 | 650029 03 | METAL CLIP | DADO IN GABBIA | ECROU | MUTTER |
| 12 | 650109 00 | 650109 00 | VALVE BODY | CORPO VALVOLA | CORPS DE VANNE | VENTILGEHAUSE |
| 13 | 670012 00 | 670012 00 | VALVE PISTON | PISTONCINO VALVOLA | PISTON | VENTILKOLBEN |
| 14 | 650106 00 | 650106 00 | VALVE CAP | CAPPUCCIO VALVOLA | CAPUCHON DE VANNE | VENTILKLAPPE |
| 15 | 620370 00 | 620349 03 | AIR COOLED CONDENSER | CONDENSATORE AD ARIA | CONDENSEUR A AIR | LUFTGEKUEHLT KONDENSATOR |
| 16 | 420000 23 | 420000 23 | SCREW | VITE | VIS | SCHRAUBE |
| 17 | 440084 00 | 440084 00 | WASHER | RONDELLA | RONDELLE | SCHEIBE |
| 18 | 650029 03 | 650029 03 | METAL CLIP | DADO IN GABBIA | ECROU | MUTTER |
| 19 | 620233 00 | 620300 00 | FAN MOTOR | MOTORE VENTILATORE | MOTEUR VENTILATEUR | LUFTER MOTOR |
| 20 | 620000 00 | 620000 01 | FAN BLADE | VENTOLA | HELICE | FLUEGEL |
| 21 | 420010 00 | 420010 00 | SCREW | VITE | VIS | SCHRAUBE |
| 22 | 440084 00 | 440084 00 | WASHER | RONDELLA | RONDELLE | SCHEIBE |
| 23 | 440026 00 | 440026 00 | LOCK WASHER | RONDELLA SPACCATA | RONDELLE | SCHEIBE |
| 24 | 650029 03 | 650029 03 | METAL CLIP | DADO IN GABBIA | ECROU | MUTTER |
| 25 | 670006 01 | 670006 01 | DRIER | FILTRO DEUMIDIFICATORE | FILTRE DESHYDRATEUR | TROCKNER |
| 26 | 784406 03 | 784406 01 | SUCTION LINE/ACCUMULATOR | ACCUMUL. E LINEA ASPIRAZIONE | ENS. ASPIRATION/ACCUMULATEUR | SAMMLER UND SAUGLEITUNGEN |

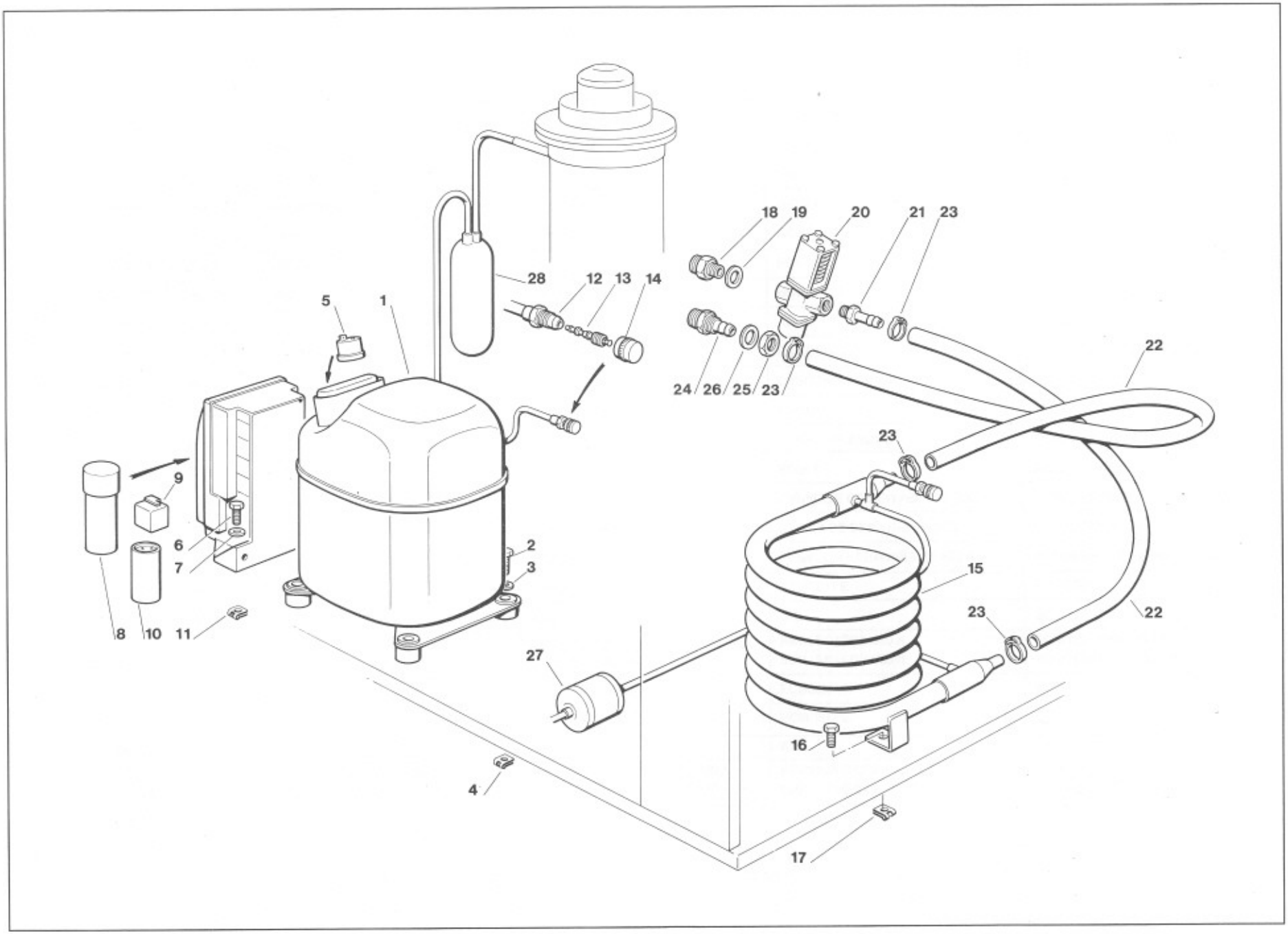
28
12
13
14
5
1
18
19
20
21
23
24
26
25
23
22
23
9
6
7
2
3
15
23
22
8
10
11
27
16
4
17

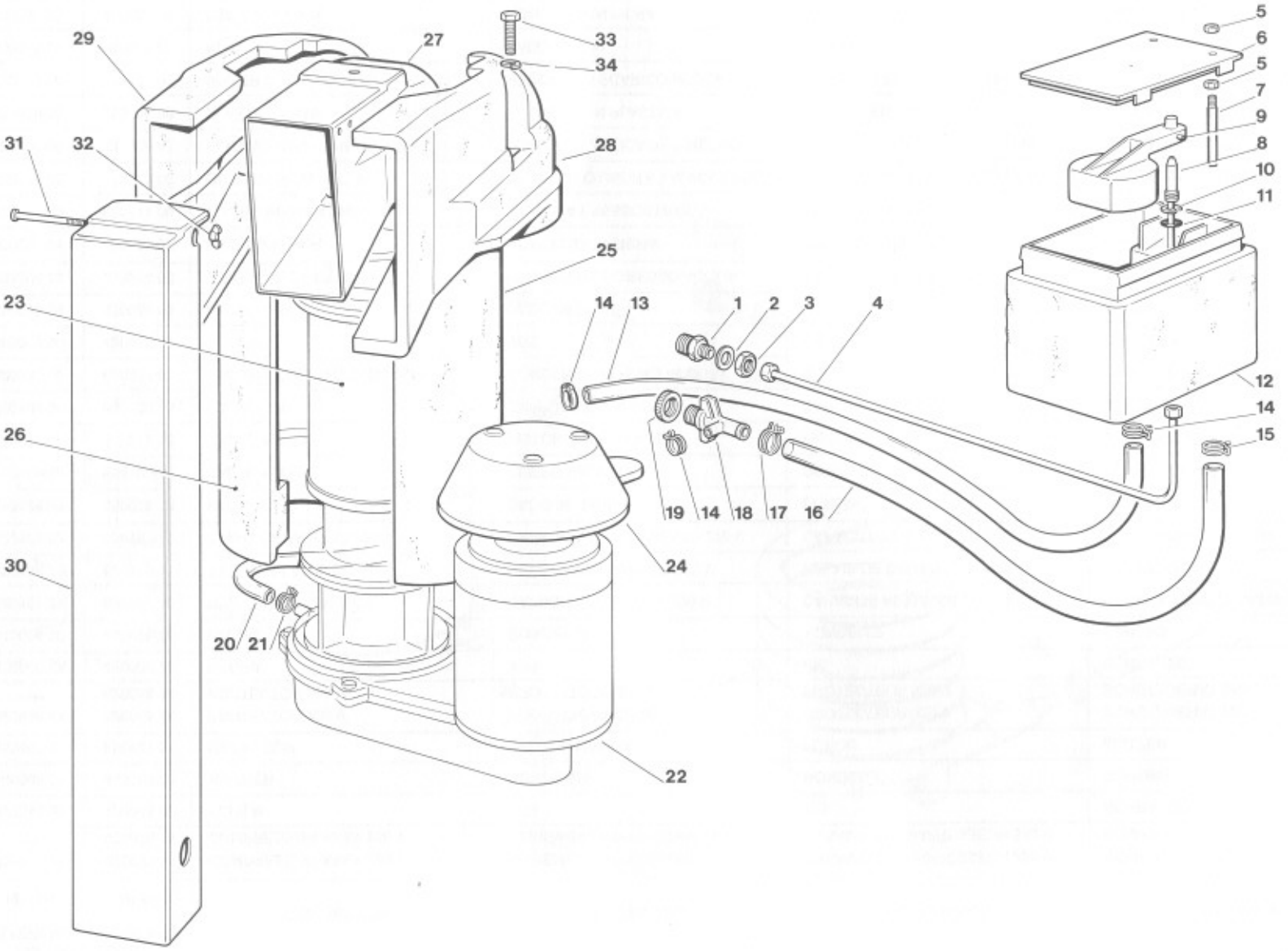
29
27
33
34
31
32
28
25
23
26
30
20
21
22
14
13
1
2
3
4
19
14
18
17
16
5
6
5
7
9
8
10
11
12
14
15

# SP 405 - SP 605 - WATER SYSTEM AND INSULATIONS - CIRCUITO IDRAULICO ED ISOLAMENTI
## CIRCUIT HYDRAULIQUE ET ISOLATIONS - WASSERKREISLAUF UND ISOLIERUNGEN

| ITEM NO<br>POS NO<br>REP. NO<br>REF. NO | PART NO - CODICE<br>REFERENCE - STUECK NR<br>SP 405 | <br><br><br><br>SP 605 | DESCRIPTION | DESCRIZIONE | DESIGNATION | BESCHREIBUNG |
|---|---|---|---|---|---|---|
| 1 | 733205 00 | 733205 00 | WATER INLET FITTING | RACCORDO INGRESSO ACQUA | RACCORD ARRIVEE D'EAU | WASSEREINLAUFSTUECK |
| 2 | 400031 00 | 400031 00 | FIBER WASHER | RONDELLA IN FIBRA | RONDELLE EN FIBRE | FIBER SCHEIBE |
| 3 | 400030 01 | 400030 01 | NUT | DADO | ECROU | MUTTER |
| 4 | NO NUMBER | NO NUMBER | COPPER TUBE | TUBO DI RAME | TUYAU EN CUIVRE | KUPFERRHOR |
| 5 | 430031 00 | 430031 00 | NUT | DADO | ECROU | MUTTER |
| 6 | 660363 00 | 660363 00 | WATER RESERVOIR COVER | COPERCHIO VACHETTA | COUVERCLE | BECKENABDECKUNG |
| 7 | 724215 06 | 724215 06 | WATER LEVEL METAL PIN | PERNO SENSORE LIVELLO ACQUA | DETECTEUR NIVEAU EAU | FÜHLERSTIFT-WASSERNIVEAU |
| 8 | 783153 00 | 783153 00 | NOZZLE | UGELLO | GICLEUR | VENTILSDUESE |
| 9 | 783127 00 | 783127 00 | FLOAT VALVE ASSY | ASS. GALLEGGIANTE | ENS. VANNE A FLOTTEUR | SCHWIMMERVENTIL-EINHEIT |
| 10 | 460038 02 | 460038 02 | CLIP RING | ANELLO SEEGER | CIRCLIP | RING |
| 11 | 640100 00 | 640100 00 | O RING | GUARNIZIONE OR | JOINT TORIQUE | SIMMERING |
| 12 | 793126 00 | 793126 00 | WATER RESERVOIR ASSY | ASS. VASCHETTA GALLEGGIANTE | ENS. RÉSERVOIR | BECKEN/SCHWIMMERVENTILEINHEIT |
| 13 | 281222 00 | 281222 00 | PLASTIC TUBE - PER MTR | TUBO IN PLASTICA - PER METRO | TUYAU EN PLASTIQUE - POUR METRE | PLASTIK ROHR - PRO METER |
| 14 | 650499 00 | 650499 00 | CLAMP | FASCETTA | COLLIER | SCHELLE |
| 15 | 460022 00 | 460022 00 | PLASTIC CLAMP | FASCETTA IN PLASTICA | COLLIER EN PLASTIQUE | PLASTIK SCHELLE |
| 16 | 281832 00 | 281832 00 | PLASTIC TUBE - PER MTR | TUBO IN PLASTICA - PER METRO | TUYAU EN PLASTIQUE - POUR METRE | PLASTIK ROHR - PRO METER |
| 17 | 460036 00 | 460036 00 | CLAMP | FASCETTA | COLLIER | SCHELLE |
| 18 | 660224 00 | 660224 00 | WATER DRAIN FITTING | RACCORDO SCARICO ACQUA | RACCORD EVACUATION EAU | WASSERABFLUSSANSCHLUSSE |
| 19 | 660535 00 | 660535 00 | PLASTIC RING NUT | GHIERA IN PLASTICA | COLLIER DE SERRAGE EN PLASTIQUE | PLASTIKRINGMUTTER |
| 20 | 610163 02 | 610163 02 | PLASTIC TUBE | TUBO IN PLASTICA | TUYAU EN PLASTIQUE | PLASTIK ROHR |
| 21 | 460025 00 | 460025 00 | CLAMP | FASCETTA | COLLIER | SCHELLE |
| 22 | 794215 08 | 794215 08 | GEAR REDUCER ASSY | ASS. MOTORIDUTTORE | ENS .MOTOREDUCTEUR | GETRIEBEMOTOR-EINHEIT |
| 23 | 794267 00 | 794267 01 | FREEZER ASSY | ASS. FREEZER | ENS. FREEZER | GEFRIERZYLINDEREINHEIT |
| 24 | 660553 00 | 660553 00 | GEAR MOTOR PLASTIC COVER | PROTEZIONE MOTORE | PROTECTION MOTEUR | PLASTIK MOTORSCHUTZ |
| 25 | 650401 00 | 650401 02 | INSULATION LEFT | ISOLAMENTO SINISTRO | ISOLATION GAUCHE | GEFRIERZYLINDERISOLIERUNG-LINKS |
| 26 | 650401 01 | 650401 03 | INSULATION RIGHT | ISOLAMENTO DESTRO | ISOLATION DROITE | GEFRIERZYLINDERISOLIERUNG-RECHTS |
| 27 | 660542 16 | 660542 16 | PLASTIC ICE SPOUT | BOCCHETTA SCARICO GHIACCIO | BEC VERSEUR | AUSWURFSCHNAUZE |
| 28 | 660509 05 | 660509 05 | SPOUT INSULATION LEFT | ISOLAMENTO BOCC. SINISTRO | ISOLATION GAUCHE BEC VERSEUR | AUSWURFSCHNAUZEISOLIERUNG |
| 29 | 660509 04 | 660509 04 | SPOUT INSULATION RIGHT | ISOLAMENTO BOCC. DESTRO | ISOLATION DROITE BEC VERSEUR | AUSWURFSCHNAUZEISOLIERUNG |
| 30 | 660455 09 | 660455 10 | PLASTIC ICE CHUTE | CONDOTTO SCARICO GHIACCIO | GOULOTTE | EIS BUNKERAUSLAUF |
| 31 | 724180 00 | 724180 00 | METAL ROD | TIRANTE | TIRANT | STANGE |
| 32 | 430083 00 | 430083 00 | WING NUT | DADO AD ALETTE | ECROU | MUTTER |
| 33 | 420001 09 | 420001 09 | SCREW | VITE | VIS | SCHRAUBE |
| 34 | 441001 02 | 441001 02 | WASHER | RONDELLA | RONDELLE | SCHEIBE |

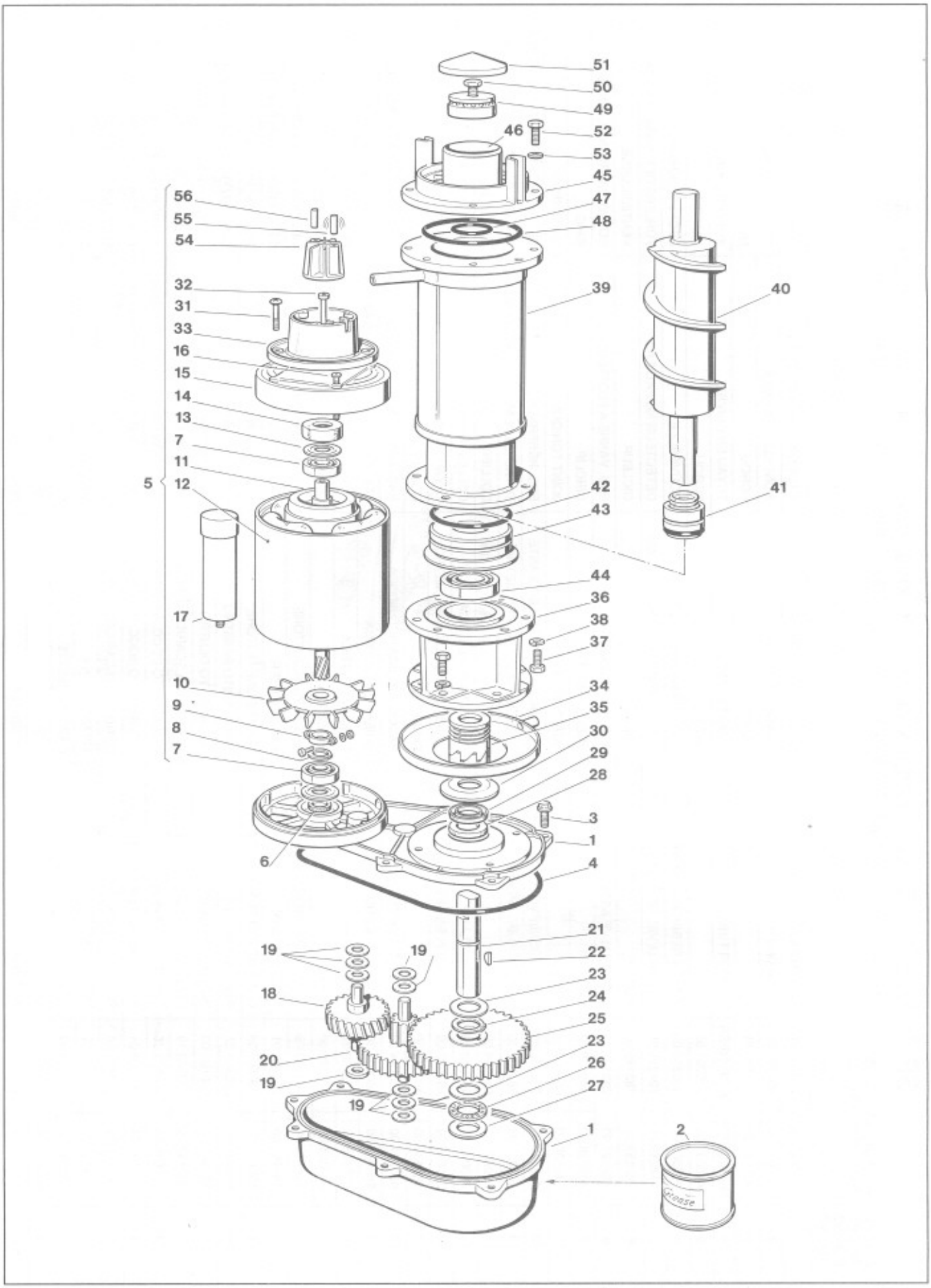
51
50
49
46
52
53
45
47
48
56
55
54
32
31
33
16
15
14
13
7
11
12
5
39
40
42
43
41
44
36
38
37
17
10
9
8
7
34
35
30
29
28
3
1
6
4
21
22
19
19
23
18
24
25
23
20
26
19
27
19
1
2

# SP 405 - SP 605 - FREEZER AND GEAR REDUCER ASSY - ASSIEME FREEZER E RIDUTTORE
## ENS. FREEZER ET MOTOREDUCTEUR - GEFRIERZYLINDER UND GETRIEBEEINHEIT

| ITEM NO<br>POS NO<br>REP. NO<br>REF. NO | PART NO - CODICE<br>REFERENCE - STUECK NR<br>SP 405 | <br><br><br>SP 605 | DESCRIPTION | DESCRIZIONE | DESIGNATION | BESCHREIBUNG |
|---|---|---|---|---|---|---|
| 1 | A 31230 01 | A 31230 01 | GEAR CASE ASSY | ASS. SCATOLA INGRANAGGI | ENS. CARTER RÉDUCTEUR | GETRIEBEGEHAUSE CPL |
| 2 | 060294 01 | 060294 01 | GREASE (1 KG) | GRASSO (1 KG) | GRAISSE (1 KG) | FETT (1 KG) |
| 3 | 03 1251 01 | 03 1251 01 | SCREW | VITE | VIS | SCHRAUBE |
| 4 | A 26013 01 | A 26013 01 | O RING | GUARNIZIONE OR | JOINT TORIQUE | O RING |
| 5 | 060273 06 | 060273 06 | DRIVE MOTOR ASSY | MOTORE RIDUTTORE | MOTEUR DU REDUCTEUR | MOTOREINHEIT |
| 6 | 02 1606 00 | 02 1606 00 | GEASE SEAL | PARAOLIO | PARAHUILE | SCHMIERDICHTUNG |
| 7 | 651053 00 | 651053 00 | BEARING | CUSCINETTO | ROULEMENT | LAGER |
| 8 | 460041 00 | 460041 00 | CLIP RING | ANELLO SEEGER | CIRCLIP | RING |
| 9 | 650341 00 | 650341 00 | CLAMP | FASCETTA | COLLIER | KLEMME |
| 10 | 650340 00 | 650340 00 | FAN BLADE | VENTOLA | HELICE | FLÜGEL/RAD |
| 11 | 794216 00 | 794216 00 | ROTOR ASSY | ASS. ROTORE | ENS. ROTOR | ROTOR EINHEIT |
| 12 | 620295 00 | 620295 00 | STATOR ASSY | ASS. STATORE | ENS. STATOR | STATOREINHEIT |
| 13 | 460041 00 | 460041 00 | SPRING | MOLLA | RESSORT | FEDER |
| 14 | 640095 01 | 640095 01 | RUBBER INSERT | INSERTO IN GOMMA | BAGUE CAOUTCHOUC | GUMMI LAGER GEHAUSE |
| 15 | 650339 00 | 650339 00 | DRIVE MOTOR COVER | COPERCHIO MOTORE | COUVERCLE MOTEUR | MOTOR DEKEL |
| 16 | 420332 00 | 420332 00 | SCREW | VITE | VIS | SCHRAUBE |
| 17 | 620292 03 | 620292 03 | CAPACITOR | CONDENSATORE | CONDENSATEUR | KONDENSATOR |
| 18 | 651156 00 | 651156 00 | 1SR GEAR & PINION | INGRANAGGIO IN FIBRA | ENGRANAGE EN CELERON | 1 GETRIEBERAND & RITZEL |
| 19 | 03 1408 24 | 03 1408 24 | TRUST WASHER (9 R.QD) | RONDELLA DI RASAMENTO (9 PZ) | RONDELLE (9 PCS) | UNTERLEG SCHEIBE (9 STK.) |
| 20 | 651157 00 | 651157 00 | 2ND GEAR & PINION | INGRANAGGIO INTERMEDIO | 2eme ENGRANAGE ET PIGNON | 2 GETRIEBERAND & RITZEL |
| 21 | 651159 00 | 651159 00 | OUTPUT SHAFT | ALBERO DI TRASMISSIONE | ARBRE DE SORTIE | AUSGANGSSHAFT |
| 22 | 03 1364 00 | 03 1364 00 | KEY | CHIAVETTA | CLAVETTE | KEIL |
| 23 | 02 1681 00 | 02 1681 00 | TRUST WASHER | RONDELLA DI RASAMENTO | RONDELLE | SCHEIBE |
| 24 | 03 1363 00 | 03 1363 00 | CLIP RING | ANELLO SEEGER | CIRCLIP | RING |
| 25 | 651158 00 | 651158 00 | OUTPUT GEAR | INGRANAGGIO FINALE | 3eme ENGRANAGE | GETRIEBERAND |
| 26 | 02 1680 00 | 02 1680 00 | ROLLER BEARING | CUSCINETTO A RULLINI | ROULEMENT | OBERLAGE |
| 27 | 02 1679 00 | 02 1679 00 | TRUST WASHER | RONDELLA DI RASAMENTO | RONDELLE | SCHEIBE |
| 28 | 02 1607 00 | 02 1607 00 | GREASE SEAL - FACE DOWN | PARAOLIO | PARAHUILE | SCHMIERDICHTUNG |
| 29 | 02 2853 01 | 02 2853 01 | GREASE SEAL - FACE UP | PARAOLIO | PARAHUILE | SCHMIERDICHTUNG |

| | | | | | | |
|---|---|---|---|---|---|---|
| 31 | 400078 00 | 400078 00 | SCREW | VITE | VIS | SCHAUBE |
| 32 | 03 1403 77 | 03 1403 77 | SCREW | VITE | VIS | SCHAUBE |
| 33 | 650515 51 | 650515 51 | PLASTIC HOUSING | ALLOGGIAMENTO IN PLASTICA | BôITE DETECTEUR EFF. HALL | KUNSTSTOFFGEHAUSE |
| 34 | 784126 00 | 784126 00 | DRIP TRAY | RACCOGLIGOCCE | GOUPELLE EAU | TROPFPFANNE |
| 35 | 060359 01 | 060359 01 | COUPLING | GIUNTO | BAGUE D'ACCOUPLEMENT CPL | KUPPLUNG |
| 36 | 764007 00 | 764007 00 | ALUMINIUM ADAPTER | SUPPORTO DI ALLUMINIO | SUPPORT | PASSTUECK |
| 37 | 420019 00 | 420019 00 | SCREW | VITE | VIS | SCHRAUBE |
| 38 | 440015 04 | 440015 04 | WASHER | RONDELLA | RONDELLE | SCHEIBE |
| 39 | 784356 00 | 784357 00 | WORM TUBE ONLY | TUBO EVAPORATORE | CYLINDRE EVAPORATEUR | GEFRIERZYLINDER |
| 40 | 784198 02 | 784198 03 | AUGER | COCLEA | VIS SANS FIN | SCHNECKE |
| 41 | 650402 00 | 650402 00 | WATER SEAL | ASSIEME PREMISTOPPA | GARNITURE D'ETANCHEITE | WASSERDICHTUNGEINHEIT |
| 42 | 640093 00 | 640093 00 | O RING | GUARNIZIONE OR | JOINT TORIQUE | O RING |
| 43 | 754008 01 | 754008 01 | BEARING RETAINER | SUPPORTO CUSCINETTO | LOGEMENT PALIER | UNTERESLAGERGEHAUSE |
| 44 | 651059 00 | 651059 00 | LO BEARING | CUSCINETTO INFERIORE | PALIER INFERIEUR | UNTERESLAGER |
| 45 | 751005 01 | 751005 01 | ICE BREAKER ONLY | ROMPIGHIACCIO | BROYEUR | EISBRECHER |
| 46 | 19 0569 01 | 19 0569 01 | WATER PROOF GREASE (4 OZ) | GRASSO IDROREPELL. (110 GR) | GRAISSE (110 GR) | FETT (110 GR) |
| 47 | 640093 02 | 640093 02 | O RING | GUARNIZIONE OR | JOINT TORIQUE | O RING |
| 48 | 640093 03 | 640093 03 | O RING | GUARNIZIONE OR | JOINT TORIQUE | O RING |
| 49 | 651058 00 | 651058 00 | TOP BEARING | CUSCINETTO SUPERIORE | PALIER SUPERIEUR | OBERESLAGER |
| 50 | 423915 00 | 423915 00 | SCREW | VITE | VIS | SCHAUBE |
| 51 | 660507 00 | 660507 00 | PLASTIC CUP | CALOTTA IN PLASTICA | CALOTTE | KUGELHAUBE |
| 52 | 420019 00 | 420019 00 | SCREW | VITE | VIS | SCHAUBE |
| 53 | 440015 04 | 440015 04 | WASHER | RONDELLA | RONDELLE | SCHEIBE |
| 54 | 650515 04 | 650515 04 | MAGNETO HOLDER | SUPPORTO MAGNETE | SUPPORT DU MAGNETO | MAGNETHALTER |
| 55 | 650515 05 | 650515 05 | MAGNETIC CYLINDER | CILINDRETTO MAGNETICO | CYLINDRE MAGNETIQUE | MAGNETZYLINDER |
| 56 | 650515 06 | 650515 06 | NON MAGNETIC CYLINDER | CILINDRETTO NON MAGNETICO | CYLINDRE NON MAGNETIQUE | NICHT MAGNETISCHES ZYLINDER |

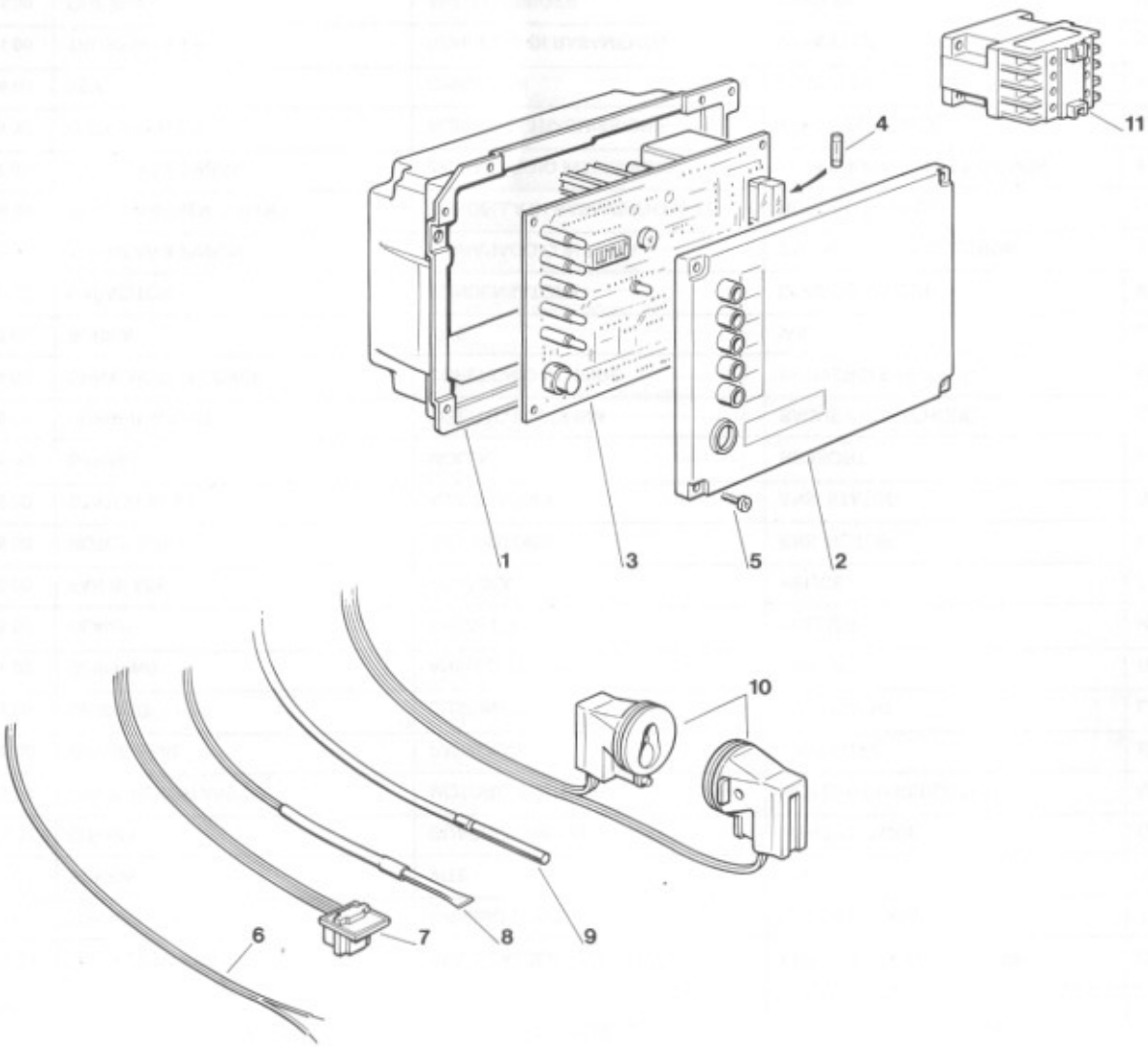
1
3
4
5
2
11
6
7
8
9
10

# SP 405 - SP 605- P.C. BOARD AND SENSOR ASSY - SCHEDA ELETTRONICA E SENSORI
## ENS. CARTE ELECTRINIQUE ET DETECTEURS - ELEKTRONISCHE KARTE UND TEMPERATURFUEHLERENHEIT

| ITEM NO<br>POS NO<br>REP. NO<br>REF. NO | PART NO<br>CODICE<br>REFERENCE<br>STUECK NR | DESCRIPTION | DESCRIZIONE | DESIGNATION | BESCHREIBUNG |
|---|---|---|---|---|---|
| 1 | 660546 00 | CONTROL BOX | SCATOLA ELETTRICA | BOITE ELECTRIQUE | SCHALTSCHRANK |
| 2 | 660547 00 | CONTROL BOX COVER | COPERCHIO SCATOLA ELETTRICA | COUVERCLE BOITE DE COMMANDE | SCHALTSCHRANK DECKEL |
| 3 | 620403 03 | P.C. BOARD ASSY | ASSIEME SCHEDA ELETTRONICA | ENSAMBLE CARTE ELECTRONIQUE | GEDRUCKTESCHALTUNG |
| 4 | 630015 09<br>630015 10 | FUSE (100 mA)<br>FUSE (16 A) | FUSIBILE (100 mA)<br>FUSIBILE (16 A) | FUSIBLE (100 mA)<br>FUSIBLE (16 A) | SCHMELZSICHERUNG (100 mA)<br>SCHMELZSICHERUNG (16 A) |
| 5 | 470000 07 | SCREW | VITE | VIS | SCHRAUBE |
| 6 | 620404 04 | WATER LEVEL SENSOR | SENSORE LIVELLO ACQUA | CAPTEUR NIVEAU EAU | WASSERNIVEAUFÜHLER |
| 7 | 620404 03 | HALL EFFECT SENSOR | SENSORE EFFETTO HALL | CAPTEUR EFFECT HALL | HALL EFFEKT-FÜHLER |
| 8 | 620404 01 | CONDENSER TEMP. SENSOR | SENSORE TEMP. CONDENSATORE | CAPTEUR TEMP. CONDENSEUR | KONDENSATORTEMPERATURFUEHLER |
| 9 | 620404 10 | EVAPORATOR TEMP. SENSOR | SENSORE TEMP. EVAPORATORE | CAPTEUR TEMP. ÉVAPORATEUR | VERDAMPFERTEMPERATURFUEHLER |
| 10 | 785086 00 | ICE LEVEL CONTROL ASSY | ASS. CONTR. LIVELLO GHIACCIO | ENS. DETECTEUR NIVEAU GLACE | EISNIVEAUFUEHLEREINHEIT |
| 11 | 630119 00<br>630124 05 | CONTACTOR SP 405<br>CONTACTOR SP 605 | TELERUTTORE SP 405<br>TELERUTTORE SP 605 | CONTACTEUR SP 405<br>CONTACTEUR SP 605 | SCHALTSCHÜTZ SP 405<br>SCHALTSCHÜTZ SP 605 |

## COMPRESSOR CHART - TABELLA COMPRESSORI - TABLEAU COMPRESSEUR - KOMPRESSOR KARTE

| MODEL<br>MODELLO<br>MODELE<br>MODELL | VOLTS<br>TENSIONE<br>TENSION<br>SPANNUNG | COMPRESSOR MODEL<br>MOD. COMPRESSORE<br>TYPE COMPRESSEUR<br>KOMPRESSOR TYP | COMPRESSOR<br>COMPRESSORE<br>COMPRESSEUR<br>KOMPRESSOR | RELAY<br>RELÉ<br>RELAIS<br>RELAIS | PROTECTOR<br>PROTETTORE<br>PROTECTEUR<br>SCHUTZGERAT | START CAPACITOR<br>CAPACITA D'AVV.<br>CAPACITÉ DE DEMARRAGE<br>START KONDENSATOR | RUN CAPACITOR<br>CAPACITA DI MARCIA<br>CAPACITÉ PERMANENCE<br>BETRIEB KONDENSATOR | AUTOTRANSFORMER<br>AUTOTRASFORMATORE<br>AUTOTRANSFORMATEUR<br>AUTOTRAFO |
|---|---|---|---|---|---|---|---|---|
| SP 405<br>SP 605 | 115/60/1<br>115/60/1 | | | | | | | |
| SP 405<br>SP 605 | 230/60/1<br>230/60/1 | U.H. AJ 5518 E | 670076 17 | 620168 17 | 620058 57 | 620167 22 | 620167 16 | ***** |
| SP 405<br>SP 605 | 220/50/1<br>220/50/1 | U.H. AJ 5512 E<br>U.H. AJ 5518 E | 670076 10<br>670076 16 | 620168 11<br>620168 11 | 620058 44<br>620058 56 | 620167 22<br>620167 22 | 620167 21<br>620167 16 | *****<br>***** |
| SP 605 | 380/50/3 | U.H. TAJ 4519 E | 670076 18 | ***** | 620058 58 | ***** | ***** | ***** |

## ELECTRIC COMPONENTS CHART - TABELLA COMPONENTI ELETTRICI - TABLEAU COMPOSANTS ELECTRIQUE - ELEKTRISCHEKARTE

| MODEL<br>MODELLO<br>MODELE<br>MODELL | VOLTS<br>TENSIONE<br>TENSION<br>SPANNUNG | CONTACTOR<br>TELERUTTORE<br>CONTACTEUR<br>SCHALTSCHÜTZ | GEAR MOTOR ASSY<br>ASS. MOTORIDUTTORE<br>ENS. MOTOREDUCTEUR<br>GETRIEBEMOTOREINHEIT | DRIVE MOTOR<br>MOTORE RIDUTTORE<br>MOTEUR REDUCTEUR<br>MOTOREINHEIT | FAN MOTOR ONLY<br>MOTORE VENTILATORE<br>MOTEUR VENTILATEUR<br>LUFTER MOTOR | DRIVE MOTOR CAPACITOR<br>CAPACITA' MOTORE RIDUTT.<br>CONDENSATEUR MOTEUR REDUCT.<br>KONDENSATOR | P.C. BOARD<br>SCHEDA ELETTRONICA<br>CARTE ELECTRONIQUE<br>ELEKTRONISCHE KARTE |
|---|---|---|---|---|---|---|---|
| SP 405<br>SP 605 | 115/60/1<br>115/60/1 | 630119 04<br>620124 07 | 794215 09<br>794215 09 | 060273 07<br>060273 07 | *****<br>***** | 620292 01<br>620292 01 | 620403 04<br>620403 04 |
| SP 405<br>SP 605 | 230/60/1<br>230/60/1 | 630119 00<br>620124 05 | 794215 08<br>794215 08 | 060273 06<br>060273 06 | *****<br>620300 00 | 620292 03<br>620292 03 | 620403 03<br>620403 03 |
| SP 405<br>SP 605 | 220/50/1<br>220/50/1 | 630119 00<br>620124 05 | 794215 08<br>794215 08 | 060273 06<br>060273 06 | 620233 00<br>620300 00 | 620292 03<br>620292 03 | 620403 03<br>620403 03 |
| SP 605 | 380/50/3 | 620124 05 | 794215 08 | 060273 06 | 620300 00 | 620292 03 | 620403 03 |