DESPIECE TECNICO

Lavavasos
Lave-verres
Glass-washer
Glaserspülmaschinen
Lavabicchieri
Lavacopos

Modelos:

AD-21 W

Junio 2011 June

Revisado Julio 2013 July Revised

FAGOR

FAGOR INDUSTRIAL

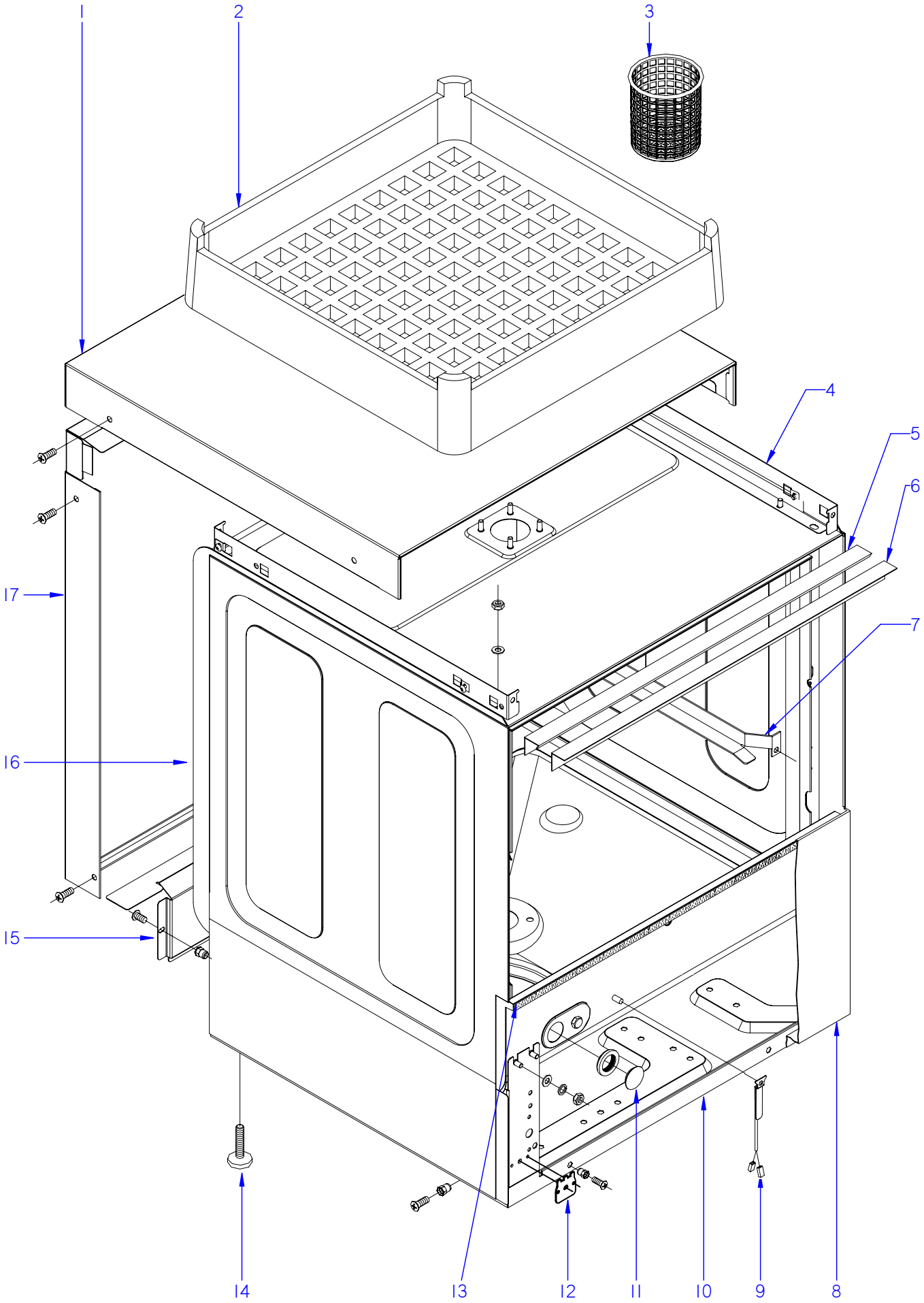

ITEM MARCADO EN COLOR = REPUESTO RECOMENDADO
COLOURED ITEM = RECOMMENDED SPARE PART

Nº plano / N º plane	Firma	Fecha / Date	Denominación / Denomination: MUEBLE / FITTING	Lamina / Sheet	
C-2832		2011-06	LAVAVASOS AD-21 W	1	Fagor Industrial S.Coop. FAGOR Oñate

MOD.	LAVAVASOS / GLASS WASHER	ZONA / ZONE	MUEBLE / FITTING	PLANO DIAGRAM	C-2832

ITEM	CODIGO REFERENCE	DENOMINACION	DENOMINATION	AD-21 W								ELIMINADO ELIMINATED	INTRODUCID. INTRODUCED	NOTAS
1	Z442908000	TAPA AD-21	COVER AD-21	1										
	Q152004000	TORNILLO APLASTADO M5x13 A30	FLAT HEADED BOLT M5x13 A304	8										
2	Z445320000	CESTILLO LVC-21	BASKET LVC-21	2										
3	Z605303000	CESTILLO CUBIERTOS	CUTLERY BASKET	1										
S/N	Z625302000	SUPLEMENT. PLATILLOS LAVAV.18	SUPPLEMENT. GLASS WASHER I	1										
4	Z420319000	ESCUADRA AMARRE TAPA 21	COVER FASTENING BRACKET 21	2										
	Q162040000	TUERCA EXAGONAL M6	HEXAGONAL NUT M6	4										
	Q221012000	TUERCA RAPIDA M,5	RAPID NUT M,5	6										
5	Z420315000	PERFIL CAJA	BOX PROFILE	1										
6	Z420306000	ESCUADRA SUJECCION PERFIL	FASTENING BRACKET PROFILE	1										
	Q162040000	TUERCA EXAGONAL M6	HEXAGONAL NUT M6	2										
7	Z440304000	GUIA CESTILLO DERECHA	RIGHT BASKET GUIDE	1										
S/Nº	Z440303000	GUIA CESTILLO IZQUIERDA	LEFT BASKET GUIDE	1										
8	Z458611000	PANEL FRONTAL 21B	FRONT PANEL 21B	1										
9	Z268004000	SONDA TEMPERATURA GICAR	TEMPERATURA PROBE GICAR	2										
S/Nº	Z718004000	AMARRE SONDA	PROBE CATCH	2								19.10.11		
	Q242010000	ARANDELA ABANICO A3	FAN WASHER A3	2										
	Q162020000	TUERCA EXAGONAL M4	HEXAGONAL NUT M4	2										
10	Z420101000	ARMAZON COMPLETO	COMPLETE FRAME	1								06.10.12		
10	12046707	ARMAZON COMPLETO LVC-21	COMPLETE FRAME LVC-21	1									06.10.12	
11	P443060000	TAPON	STOPPER	1										
S/Nº	N503017000	SOPORTE TERMOSTATO 1001713	THERMOSTAT SUPPORT 1001713	1										
12	Z713038000	REGU. TERMOS. TANQUE 60 ºC	THERM.TANK REGULATOR	1								19.10.11		
12	12041033	SOPORTE TERMOSTATO TANQUE	TANK THERMOSTAT SUPPORT	1									19.10.11	
13	Z420309000	PERFIL INFERIOR CAJA	BOX LOWER PROFILE	1										
14	Z200107000	PATA REGULABLE	ADJUSTABLE LEG	4										
15	Z422908000	PANEL POSTERI. INFERIOR 20-21	LOWER REAR PANEL 20-21	1										
16	Z450301000	CAJA SOLDADA AD-21 B, DD,C	WELDED BOX AD-21 B, DD,C	1										
	Q162040000	TUERCA EXAGONAL M6	HEXAGONAL NUT M6	8										
	Q262040000	ARANDELA GROW. A6 A.304	WASHER GROW. A6 A.304	8										
17	Z422902000	PANEL POSTERIOR R20-C21	REAR PANEL R20-C21	1										

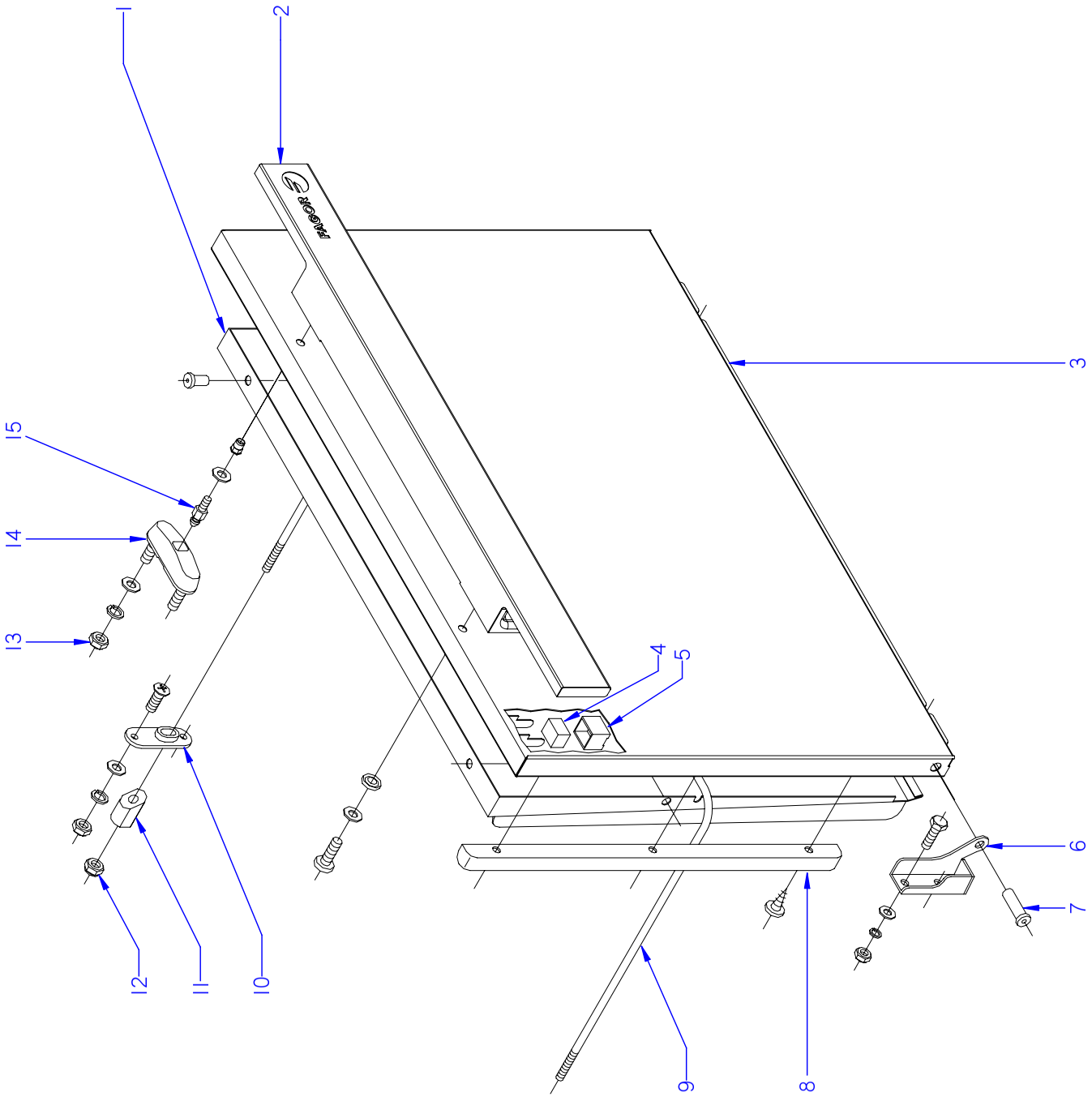

ITEM MARCADO EN COLOR = REPUESTO RECOMENDADO
COLOURED ITEM = RECOMMENDED SPARE PART

Nº plano / N º plane	Firma	Fecha / Date	Denominación / Denomination: PUERTA / DOOR	Lamina / Sheet	
C-2833		2011-06	LAVAVASOS AD-21 W	2	Fagor Industrial S.Coop. Oñate FAGOR

MOD.	LAVAVASOS / GLASS WASHER	ZONA / ZONE	PUERTA / DOOR	PLANO DIAGRAM	C-2833

ITEM	CODIGO REFERENCE	DENOMINACION	DENOMINATION	AD-21 W								ELIMINADO ELIMINATED	INTRODUCID. INTRODUCED	NOTAS
	12092605	**KIT PUERTA AD-21**	**DOOR KIT AD-21**	**1**										
1	Z420513000	CONTRAPUERTA COMPL. R20-C21	COMPL. DOOR REVERSE R20-C2	1										
	Q412000000	REMACHE TUBULAR 4 x 8	TUBULAR RIVET 4 x 8	4										
2	Z440505000	ASA AD-21	HANDLE AD-21	1										
S/Nº	Z210503000	TACO SUJECCION	FASTENING RAWL	2										
	Q012045000	TORNILLO EXAGONAL M6X30	HEXAGONAL BOLT M6x30	2										
	Q262040000	ARANDELAGROW. A6 A.304	WASHER GROW. A6 A.304	2										
3	Z440504000	PUERTA COMPLETA AD-21	COMPLETE DOOR AD-21	1										
S/Nº	Z206135000	CHECK LIST LAVAVAJILLAS FAGOR	CHECK LIST	1										
4	Z200506000	IMAN	MAGNET	1										
5	Z200507000	PROTECTOR IMAN	MAGNET PROTECTOR	1										
6	Z400514000	BISAGRA IZQUIERDA T-C.	LEFT HINGE T-C.	1										
S/Nº	Z400515000	BISAGRA DERECHA T-C.	RIGHT HINGE T-C.	1										
	Q012042000	TORNILLO EXAGONAL M6X15	HEXAGONAL BOLT M6x15	4										
	Q232040000	ARANDELA A6	WASHER A6	4										
	Q262040000	ARANDELAGROW. A6 A.304	WASHER GROW. A6 A.304	4										
	Q162040000	TUERCA EXAGONAL M6	HEXAGONAL NUT M6	4										
7	Z400516000	EJE PUERTA	DOOR SHAFT	2										
8	Z420522000	GUIA IZQUIERDA	LEFT GUIDE	1										
S/Nº	Z420521000	GUIA DERECHA	RIGHT GUIDE	1										
	Q412000000	REMACHE TUBULAR 4 x 8	TUBULAR RIVET 4 x 8	4										
9	Z420519000	VARILLA TENSOR	TIGHTENER ROD	1										
10	Z200310000	SOPORTE TENSOR	TIGHTENER SUPPOR	2										
11	Z200522000	TENSOR PUERTA	TIGHTENER DOOR	2										
12	Q222012000	TUERCA AUTOB. M6	SELF-LOCKING NUT M6	2										
13	Q222012000	TUERCA AUTOB. M6	SELF-LOCKING NUT M6	2										
14	Z200607000	CONJUNTO CIERRE PUER.T-CO	LOCK UNIT PUERTAT-CO	1										
15	Z200601000	ENGANCHE CIERRE	LOCK LATCH	1										
	Q232030000	ARANDELA A5	WASHER A5	1										

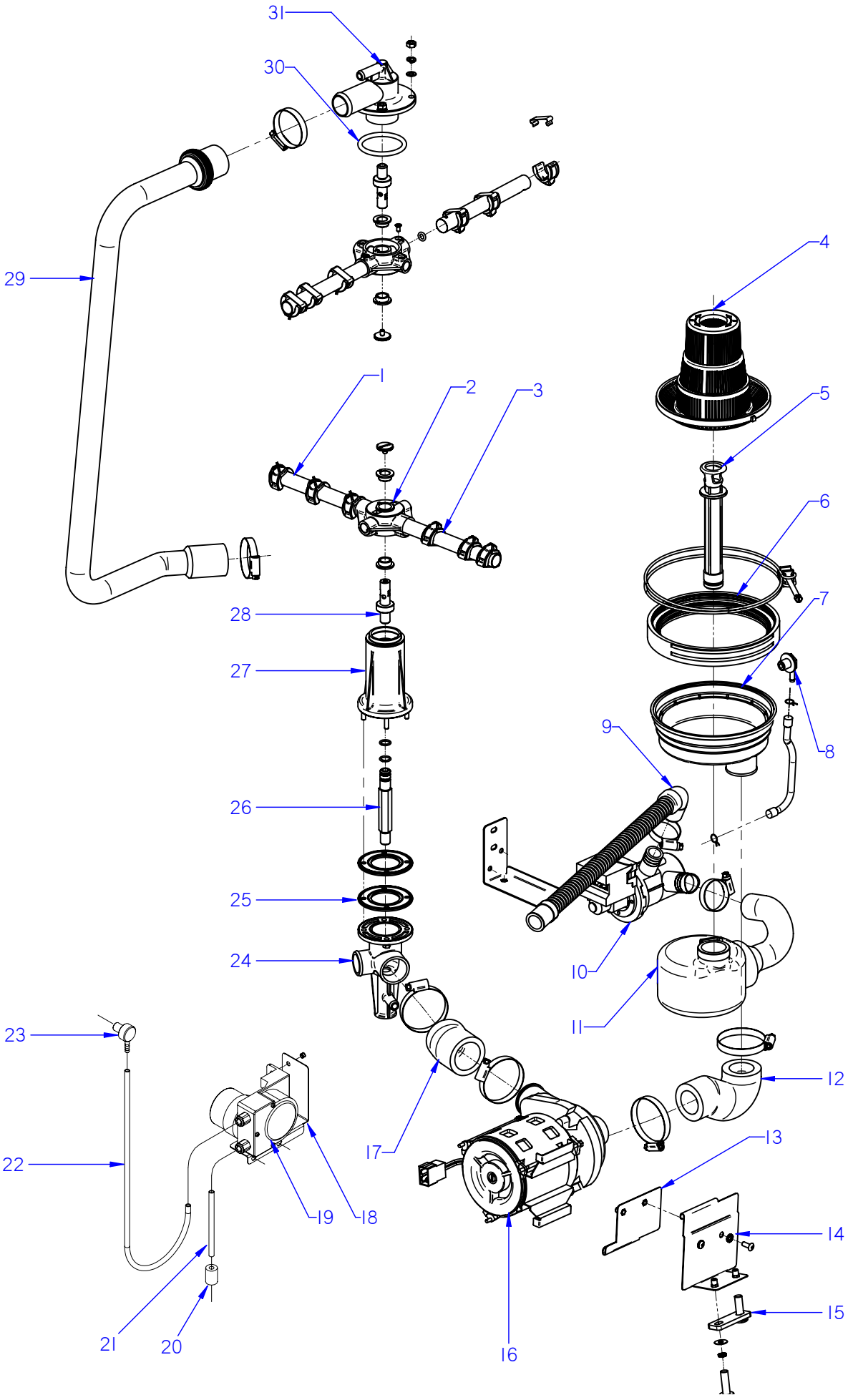

ITEM MARCADO EN COLOR = REPUESTO RECOMENDADO
COLOURED ITEM = RECOMMENDED SPARE PART

Nº plano / N º plane	Firma	Fecha / Date	Denominación / Denomination: FUNCIONAL LAVADO / WASH FUNCTIONAL	Lamina / Sheet	
C-2834		2011-06	LAVAVASOS AD-21 W	3	Fagor Industrial S.Coop. FAGOR Oñate

MOD.	LAVAVASOS / GLASS WASHER	ZONA / ZONE	PARTE FUNCIONAL LAVADO WASH FUNCTIONAL PART	PLANO DIAGRAM	C-2834

ITEM	CODIGO REFERENCE	DENOMINACION	DENOMINATION	AD-21 W								ELIMINADO ELIMINATED	INTRODUCID. INTRODUCED	NOTAS
1	Z440707000	RAMA LAVADO B	WASH B BRANCH	2										
S/Nº	Z400709000	TOBERA LAVADO	WASH NOZZLE	12										
S/Nº	Z400711000	ENGANCHE TOBERA LAVADO	WASH NOZZLE CATCH	12										
2	Z410704000	CRUCETA	CROSSPIECE	2										
	Q152016000	TORNILLO ESPECIAL M.5X0.8	SPECIAL BOLT M.5X0.8	2										
	Z410705000	CASQUILLO CRUCETA	CROSSPIECE BUSHING	4										
3	Z440706000	RAMA LAVADO A	WASH BRANCH A	2										
4	Z400920000	FILTRO ALTO	HIGH FILTER	1										
5	Z400907000	ALIVIADERO	OVERFLOW	1								24.06.13		
5	12047160	ALIVIADERO LVS MOD. B	OVERFLOW LVS MOD. B	1									24.06.13	
S/Nº	12010282	JUNTA TORICA 25.4X20.2X2.6	O-RING 25.4X20.2X2.6	1										
6	Z400902000	JUNTA CUBETA	TRAY SEAL	1										
7	Z400901000	CUBETA	TRAY	1										
	Z400903000	ABRAZADERA CUBETA	TRAY CLAMP	1										
8	Z230905000	PASAMUROS INOX DETERGENTE	INOX DETERGENT WALL BUSHIN	1										
	P102154000	BRIDA ELASTICA TUBO	ELASTIC PIPE FLANGE	2										
	3702400000	TUBO GOMA NEGRO D 8*4	BLACK RUBBER PIPE Ø 8*4	1										
9	Z220903000	MANGUERA DESAGÜE	DRAINAGE HOSE	1										
	Q901307000	ABRAZADERA ELASTICA 37.7-39.7	ELASTIC CLAMP 37.7-39.7	1										
10	Z223501000	BOMBA DE DESAGUE 30W 60HZ	DRAINAGE PUMP 30W 60HZ	1										
	Z430902000	SOPORTE BOMBA DESAGUE B	DRAINAGE PUMP SUPPORT B	1										
	Q012031000	TORNILLO EXAGONAL M5X10	HEXAGONAL BOLT M5x10	2										
	Q242030000	ARANDELA ABANICO A5 A.304	FAN WASHER A5 A.304	2										
11	Z430901000	ACUMULADOR 1503114	ACCUMULATOR 1503114	1										
	Q901307000	ABRAZADERA ELASTICA 37.7-39.7	ELASTIC CLAMP 37.7-39.7	1										
12	Z400905000	CODO ASPIRACION 1003115	EXTRACTOR ELBOW 1003115	1										
	Q881307000	ABRAZADERA 40-60	CLAMP 40-60	2										
13	Z401004000	AMARRE MOTOBOMBA	MOTORPUMP FASTENING	1										
14	Z421002000	SOPORTE MOTOBOMBA	MOTOR PUMP SUPPORT	1										
	Q152004000	TORNILLO APLASTADO M5x13 A30	FLAT HEADED BOLT M5x13 A304	2										
	Q242030000	ARANDELA ABANICO A5 A.304	FAN WASHER A5 A.304	4										

MOD.	LAVAVASOS / GLASS WASHER	ZONA / ZONE	PARTE FUNCIONAL LAVADO WASH FUNCTIONAL PART	PLANO DIAGRAM	C-2834

ITEM	CODIGO REFERENCE	DENOMINACION	DENOMINATION	AD-21 W								ELIMINADO ELIMINATED	INTRODUCID. INTRODUCED	NOTAS
15	Z401006000	PERFIL AMORTIGUADOR	SHOCK ABSORBER PROFILE	1										
	Q242030000	ARANDELA ABANICO A5 A.304	FAN WASHER A5 A.304	2										
	Q302022000	ARANDELA 16x6x1,2 A304	WASHER 16x6x1.2 A304	2										
	Q032032000	TORNILLO ALOMADO M5X15	CURVED SCREW M5X15	2										
16	Z401001000	BOMBA LAVADO	WASH PUMP	1										
	Z401001100	TURBINA BOMBA Z401001	TURBINE PUMP Z401001	1										
17	Z400906000	CODO IMPULSION 1003116	IMPULSE ELBOW 1003116	1										
	Q881307000	ABRAZADERA 40-60	CLAMP 40-60	2										
18	Z208909000	SOPORTE DOSIF. DETERGENTE	DETERGENT DISP. SUPPORT	1										
19	Z208903000	DOSIFIC. DGTE REGULABLE G300	DETERGENT DISP. ADJUST. G30(	1										
20	Z701152000	PESO FILTRO	FILTER WEIGHT	1										
21	Z448614000	CONDUCTO ASPIRACIÓN	EXTRACTOR PIPE	1										
22	3699300000	CONDUCTO DOSIF. TRANSPARENT	TRANSPAR. EXTRACTOR PIPE	1										
23	Z208927000	PASAMUROS INOX DETERGENTE	INOX DETERGENT WALL BUSHIN	1										
S/Nº	12024314	CABLEADO DOSIFICADOR DTGTE.	DETERGENT DISP. WIRING	2										
24	Z410702000	PASAMUROS CESTO CUADRADO	SQUARE BASKET WALL BUSHINC	1										
	Q232030000	ARANDELA A5	WASHER A5	4										
	Q262030000	ARANDELA GROW. A5 A.304	WASHER GROW. A5 A.304	4										
	Q162030000	TUERCA EXAGONAL M5	HEXAGONAL NUT M5	4										
25	Z400703000	JUNTA ESTANQUE. 1003113	SEAL. 1003113	2										
26	Z410712000	EMPALME ACLARADO	RINSE CONNECTION	1										
	Q307056000	JUNTA TORICA 10,82x14,38x1,78	O-RING 10.82x14.38x1.78	2										
27	Z410701000	SOPORTE INFERIOR CUADRO	LOWER SUPPORT BRACKET	1										
28	Z410708000	EJE	SHAFT	2										
29	Z440711000	ARBOL LAVADO	WASH CAM	1										
	Q881306000	ABRAZADERA 32-50L	CLAMP 32-50L	2										
30	Q307052000	JUNTA TORICA 50,17X60,83X5,3	O-RING 50.17X60.83X5.3	1										
31	Z410703000	SOPORTE DISTRIB. SUPERIOR	UPPER DISTRIB. SUPPORT	1										
	Q232040000	ARANDELA A6	WASHER A6	4										
	Q262040000	ARANDELA GROW. A6 A.304	WASHER GROW. A6 A.304	4										
	Q162040000	TUERCA EXAGONAL M6	HEXAGONAL NUT M6	4										

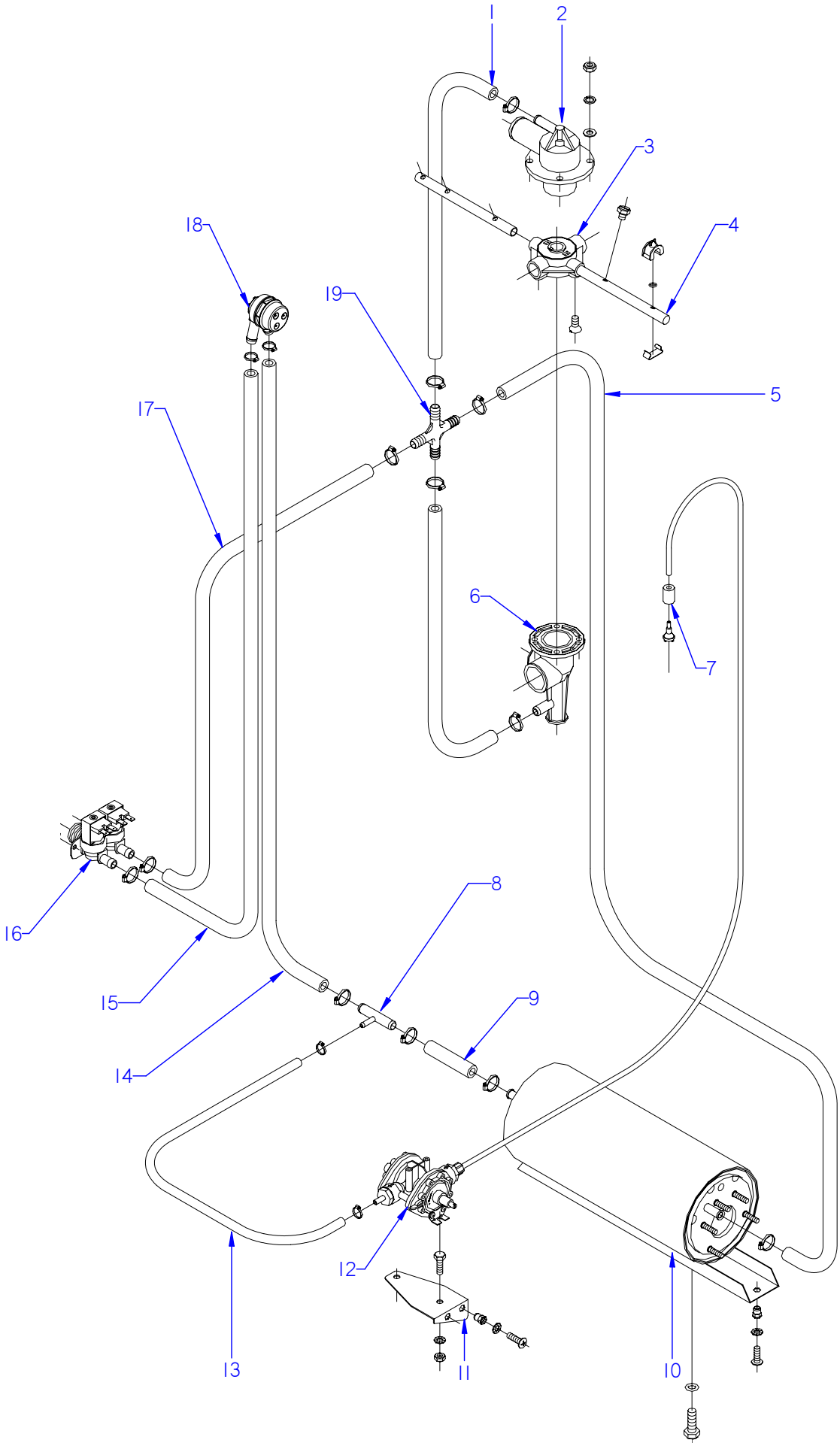

ITEM MARCADO EN COLOR = REPUESTO RECOMENDADO
COLOURED ITEM = RECOMMENDED SPARE PART

Nº plano / N º plane	Firma	Fecha / Date	Denominación / Denomination: FUNCIONAL ACLARADO / RINSE FUNCTIONAL	Lamina / Sheet	
C-2835		2011-06	LAVAVASOS AD-21 W	4	Fagor Industrial S.Coop. FAGOR Oñate

MOD.	LAVAVASOS / GLASS WASHER	ZONA / ZONE	PARTE FUNCIONAL ACLARADO RINSE FUNCTIONAL PART	PLANO DIAGRAM	C-2835

ITEM	CODIGO REFERENCE	DENOMINACION	DENOMINATION	AD-21 W								ELIMINADO ELIMINATED	INTRODUCID. INTRODUCED	NOTAS
1	3676900000	TUBO GOMA NEGRA Ø17*10	BLACK RUBBER PIPE Ø17*10	2										
	Q881302000	ABRAZADERA 12/20	CLAMP 12/20	6										
2	Z410703000	SOPORTE DISTRIBUIDOR SUPER.	UPPER DISTRIBUTION SUPPORT	1										
	Q232040000	ARANDELA A6	WASHER A6	4										
	Q262040000	ARANDELA GROW. A6 A.304	WASHER GROW. A6 A.304	4										
	Q162040000	TUERCA EXAGONAL M6	HEXAGONAL NUT M6	4										
3	Z410704000	CRUCETA	CROSSPIECE	2										
	Q152016000	TORNILLO ESPECIAL M.5X0.8	SPECIAL BOLT M.5X0.8	2										
	Z410705000	CASQUILLO CRUCETA	CROSSPIECE BUSHING	4										
4	Z441902000	RAMA ACLARADO B	RINSE BRANCH B	2										
S/Nº	Z441901000	RAMA ACLARADO A	RINSE BRANCH A	2										
	Z211903000	TOBERA ACLARADO	RINSE NOZZLE	10										
	Q042021000	TORNILL. AVELLANADO M4X10 A30	COUNTERSUNK BOLT M4X10 A30	4										
5	3676900000	TUBO GOMA NEGRA Ø17*10	BLACK RUBBER PIPE Ø17*10	1										
	Q881302000	ABRAZADERA 12/20	CLAMP 12/20	1										
6	Z410702000	PASAMUROS CESTO CUADRADO	SQUARE BASKET WALL BUSHIN(	1										
	Q232030000	ARANDELA A5	WASHER A5	4										
	Q262030000	ARANDELA GROW. A5 A.304	WASHER GROW. A5 A.304	4										
	Q162030000	TUERCA EXAGONAL M5	HEXAGONAL NUT M5	4										
7	Z701152000	PESO FILTRO	FILTER WEIGHT	1										
8	Z601157000	TOMA PRESION	PRESSURE INTAKE	1										
9	3676900000	TUBO GOMA NEGRA Ø17*10	BLACK RUBBER PIPE Ø17*10	1										
	Q881302000	ABRAZADERA 12/20	CLAMP 12/20	4										
10	Z401730000	CALDERIN LAVAVASOS 10-2	GLASSWASHER BOILER 10-2	1								15.10.12		
10	12046994	CALDERIN COMPLETO LVS. W	GLASSWASHER BOILER 10-2	1									15.10.12	
11	Z401116000	SOPORTE DOSIFICADOR	DISPENSER SUPPORT	1										
	Q242030000	ARANDELA ABANICO A5 A.304	FAN WASHER A5 A.304	4										
	Q152004000	TORNILLO APLASTADO M5x13 A30	FLAT HEADED BOLT M5x13 A304	2										
12	Z211109000	DOSIFICADOR TENSOACTIVO N-6	SURFACE ACT. DISP. N-6	1								18.06.12		
12	12045206	DOSIFICADOR_ABRILLANTADOR_A	RINSE AID DISPENSER	1									18.06.12	
S/Nº	Z448618000	CONDUCTO ABRILLANTADOR	POLISH DUCT	1										

MOD.	LAVAVASOS / GLASS WASHER	ZONA / ZONE	PARTE FUNCIONAL ACLARADO RINSE FUNCTIONAL PART	PLANO DIAGRAM	C-2835

ITEM	CODIGO REFERENCE	DENOMINACION	DENOMINATION	AD-21 W								ELIMINADO ELIMINATED	INTRODUCID. INTRODUCED	NOTAS
13	3704000000	TUBO GOMA NEGRA Ø10,5*5	BLACK RUBBER PIPE Ø10,5*5	1										
	Q881308000	ABRAZADERA 8/14	CLAMP 8/14	2										
14	3676900000	TUBO GOMA NEGRA Ø17*10	BLACK RUBBER PIPE Ø17*10	1										
	Q881302000	ABRAZADERA 12/20	CLAMP 12/20	2										
15	3676900000	TUBO GOMA NEGRA Ø17*10	BLACK RUBBER PIPE Ø17*10	1										
	Q881302000	ABRAZADERA 12/20	CLAMP 12/20	2										
16	P255001000	ELECTROVALVULA DOBLE	DOUBLE SOLENOID VALVE	1										
17	3676900000	TUBO GOMA NEGRA Ø17*10	BLACK RUBBER PIPE Ø17*10	1										
	Q881302000	ABRAZADERA 12/20	CLAMP 12/20	2										
18	Z231106000	VALVULA ANTIRRETORNO	NON-RETURN VALVE	1										
	Q881302000	ABRAZADERA 12/20	CLAMP 12/20	2										
19	Z401108000	RACORD EN CRUZ	DIAGONAL CONNECTION	1										

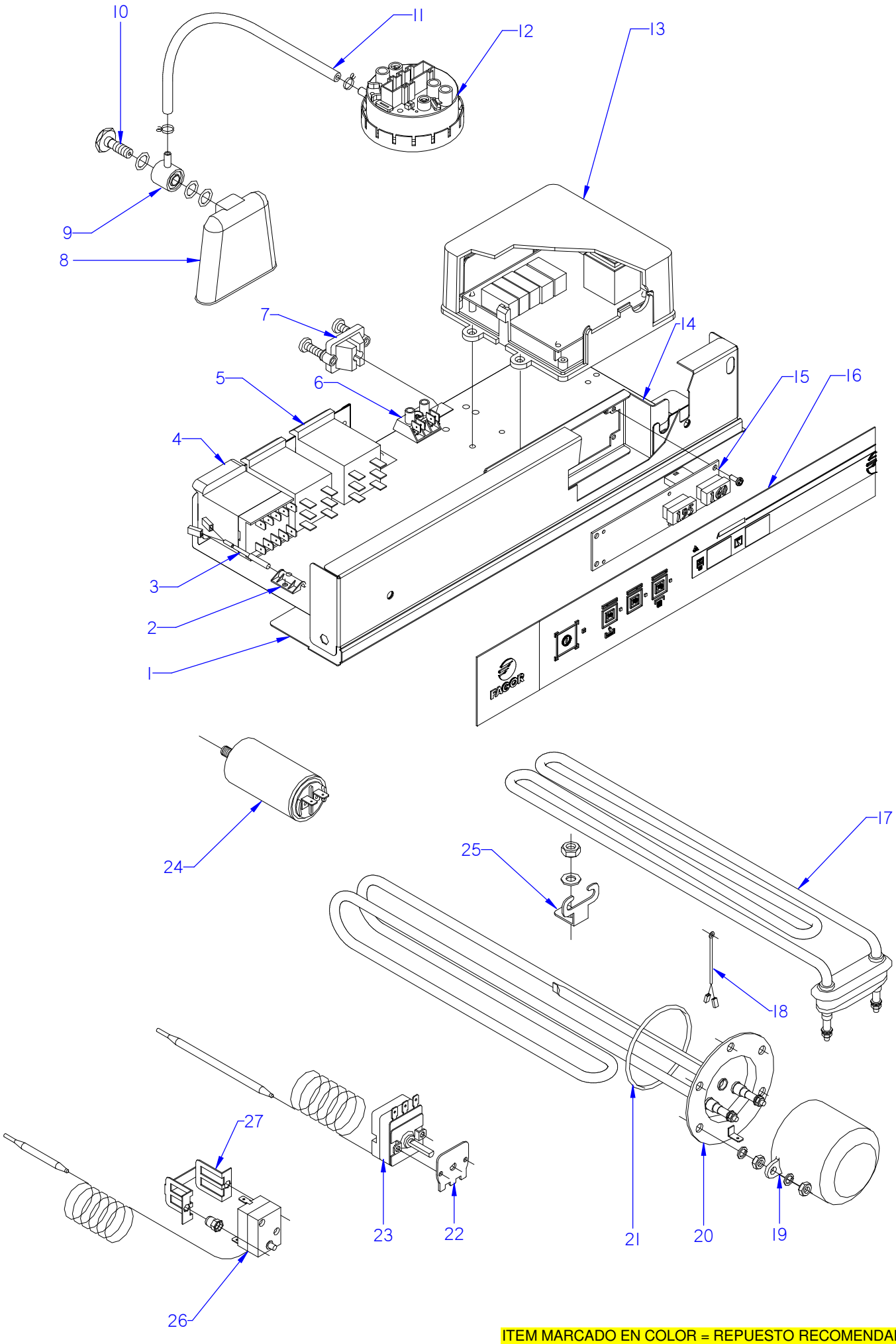

ITEM MARCADO EN COLOR = REPUESTO RECOMENDADO
COLOURED ITEM = RECOMMENDED SPARE PART

Nº plano / N º plane	Firma	Fecha / Date	Denominación / Denomination: FUNCIONAL ELECTRICO / ELECTRICS FUNCTIONAL		
C-2836		2011-06	LAVAVASOS AD-21 W	5	Fagor Industrial S.Coop. FAGOR Oñate

MOD.	LAVAVASOS / GLASS WASHER	ZONA / ZONE	PARTE FUNCIONAL ELECTRICA ELECTRICS FUNCTIONAL PART	PLANO DIAGRAM	C-2836

ITEM	CODIGO REFERENCE	DENOMINACION	DENOMINATION	AD-21 W								ELIMINADO ELIMINATED	INTRODUCID. INTRODUCED	NOTAS
1	Z448402000	FRENTE COMPLETO AD-21 W	COMPLETE FRONT AD-21 W	1								19.10.11		
1	12041130	FRENTE EXT. COMPL. AD-21W	COMPLETE FRONT AD-21 W	1									19.10.11	
	Q152004000	TORNILLO APLASTADO M5x13 A30	FLAT HEADED BOLT M5x13 A304	2										
2	Z203010000	AMARRE INTERRUP. MAGNETICO	MAGNETIC SWITCH FASTENER	1										
	Q232030000	ARANDELA A5	WASHER A5	1										
	Q152004000	TORNILLO APLASTADO M5x13 A30	FLAT HEADED BOLT M5x13 A304	1										
	Q162030000	TUERCA EXAGONAL M5	HEXAGONAL NUT M5	2										
3	Z203009000	INTERRUPTOR MAGNETICO	MAGNETIC SWITCH	1										
4	12024011	CONTACTOR 230 V. 50-60 HZ	CONTACTOR 230 V. 50-60 HZ	1								15.10.12		
4	12024011	CONTACTOR 230 V. 50-60 HZ	CONTACTOR 230 V. 50-60 HZ	2									15.10.12	
5	12023706	RELE 230V. 16A 50-60 HZ	RELAY 230V. 16A 50-60 HZ	2								15.10.12		
5	12023706	RELE 230V. 16A 50-60 HZ	RELAY 230V. 16A 50-60 HZ	1									15.10.12	
6	Z603025000	REGLETA DE CONEXIONES	CONNECTION STRIP	1										
S/Nº	12045569	BORNAS PORTAFUSIB. 13A 2,5	FUSE HOLDER TERMINAL 13A	1									18,06,12	
7	Z203020000	RETENEDOR DE CABLE	CABLE HOLDER	1										
8	Z203011000	CAMARA PRESOSTATO	PRESSURE SWITCH	1										
9	Z203012000	EMPALME PRESOSTATO	PRESSURE SWITCH CONNEX	1										
10	Z203013000	TORNILLO PRESOSTATO	PRESSURE SWITCH BOLT	1										
	Q307003000	JUNTA TORICA 16.01X10.77X2.62	O-RING 16.01X10.77X2.62	3										
11	3702400000	TUBO GOMA NEGRO D 8*4	BLACK RUBBER PIPE Ø 8*4	1										
	P102154000	BRIDA ELASTICA TUBO	ELASTIC PIPE FLANGE	2										
12	Z433011000	PRESOSTATO DOBLE	DOUBLE PRESSURE SWITCH	1										
S/Nº	Z218002000	ESCUADRA AMARRE PRESOSTAT	PRESSURE SWITCH SQUARE	1										
	Q082032000	TORNILLO ALOMADO BZ-3,5X9,5	ALOM. BOLT BZ-3,5X9,5	1										
	Q419005000	REMACHE 4X8 ALMG3 / ALUMINIO	RIVET 4X8 ALMG3 / ALUMINIUM	1										
13	Z213073000	TARJETA 5 RELES	CHAMBER 5 RELAY	1								28.01.13		
13	12048170	TARJETA 230V AC 50/60Hz 5 REL. U	CHAMBER 230V AC 50/60Hz 5 R	1								02.09.13		
13	12008750	TARJETA 230V AC 50/60Hz 5 REL. U	CHAMBER 230V AC 50/60Hz 5 R	1									02.09.13	
	Q232020000	ARANDELA A4	WASHER A4	4										
	Q242020000	ARANDELA ABANICO A5 A.304	FAN WASHER A4 A.304	4										
	Q042022000	TORN. AVELLANADO M4X15	COUNTERSUNK BOLT M4X15	4										

MOD.	LAVAVASOS / GLASS WASHER	ZONA / ZONE	PARTE FUNCIONAL ELECTRICA ELECTRICS FUNCTIONAL PART	PLANO DIAGRAM	C-2836

ITEM	CODIGO REFERENCE	DENOMINACION	DENOMINATION	AD-21 W								ELIMINADO ELIMINATED	INTRODUCID. INTRODUCED	NOTAS
14	Z218432000	SOPORTE DISPLAY Tª ADVANCE	DISPLAY Tª ADV. SUPPORT	1										
	Q262030000	ARANDELA GROW. A5 A.304	WASHER GROW. A5 A.304	2										
	Q162030000	TUERCA EXAGONAL M5	HEXAGONAL NUT M5	2										
15	Z218433000	DISPLAY Tª ADVANCE W	DISPLAY Tª ADVANCE W	1										
16	Z448401000	EMBELLECED. ADHESIVO AD-21W	ADHES. TRIM AD-21W	1										
17	R223005000	RESISTENCIA TANQUE	TANK RESISTOR	1										
18	Z268004000	SONDA TEMPERATURA GICAR	TEMPERATURA PROBE GICAR	1								19.10.11		
18	Z713028000	CONJUNTO SONDA 64KOhmio NTC	64KOhmio NTC PROBE SET	1									19.10.11	
19	Z401713000	CAPERUZA RESISTENC. CALDERIN	BOILER RESIST. CAP	1										
	Q163140000	TUERCA EXAGONAL M6 LATON	HEXAGONAL NUT M6 BRASS	2										
	Q242030000	ARANDELA ABANICO A5 A.304	FAN WASHER A5 A.304	2										
	Q152004000	TORNILLO APLASTADO M5x13 A304	FLAT HEADED BOLT M5x13 A304	2										
20	Z421712000	RESISTENCIA CALDERIN 2800W	BOILER RESISTOR 2800W	1										
	Q221305000	TUERCA EXAGONAL M4 ZINCADA	HEXAGONAL NUT M4 ZIN.	2										
	Q163140000	TUERCA EXAGONAL M6 LATON	HEXAGONAL NUT M6 BRASS	5										
	Q262040000	ARANDELA GROW. A6 A.304	WASHER GROW. A6 A.304	5										
21	Q307053000	JUNTA TORICA 43.82X54.48X5.35	"O" RING 43.82X54.48X5.35	1										
22	Z718446000	CHAPA W 85ºC	W 85ºC PLATE	1								19.10.11		
22	12043911	REGULADOR Tª W AF 167ºF	REGULATOR Tª W AF 167ºF	1									03.12.12	
23	Z393005000	TERMOSTATO CALDERIN	WASH DRUM THERMOSTAT	2								19.10.11		
23	12040858	TERMOSTATO 16A 85ºC 6 801V UL	TERMOSTAT 16A 85ºC 6 801V UL	2									19.10.11	
	Q152024000	TORNILLO AVELLANADO M4X8 A30	COUNTERSUNK BOLT M4X8 A304	2										
24	V817100000	CONDENSADOR 6 M.F.	CONDENSER 6 M.F.	1										
25	Z603602000	SOPORTE RESISTENCIATANQUE	TANK RESISTOR SUPPORT	1										
	Q232040000	ARANDELA A6	WASHER A6	1										
	Q162040000	TUERCA EXAGONAL M6	HEXAGONAL NUT M6	1										
26	Z213014000	LIMITADOR TECASA P.	TECASA P. LIMITER	1									19.10.11	
27	Z203060000	AMARRE LIMITADOR TECASA	LIMITER FASTENING	1									19.10.11	
	Q221341000	REMACHE EXAGONAL M4	HEXAGONAL RIVET M4	2									19.10.11	
	Q152024000	TORNIL. AVELLANADO M4X8 A304	COUNTERSUNK BOLT M4x8	2									19.10.11	

MOD.	LAVAVASOS / GLASS WASHER	ZONA / ZONE	VARIOS / MISCELLANEOUS	PLANO DIAGRAM	

ITEM	CODIGO REFERENCE	DENOMINACION	DENOMINATION	AD-21 W								ELIMINADO ELIMINATED	INTRODUCID. INTRODUCED	NOTAS
	Z448606000	FOLLETO INSTRUCCIONES AD-21W	INSTRUCTION LEAFL. AD-21W	1										
	Z403042000	ESQUEMA TEORICO LAVAVA.AD	THEORETICAL DIAGRAM AD	1										PLANO HC-18213
	Z403043000	ESQUEMA MONTAJE LAVAVA AD	ASSEMBLY DIAGRAM AD	1										PLANO HC-18214
	Z403041000	INSTALACION ELEC. LAVAVAS. AD	ELEC. INSTALATION AD	1								19.10.11		
	12040957	INSTALACION ELECTRICA UL	ELEC. INSTALATION UL	1									19.10.11	
	12023974	CABLE ALIMENTACION USA	SUPPLY CABLE USA	1										
	12024511	CABL. CONEXIÓN SONDAS GICAR	GICAR CONNECTION WIRING	1								19.10.11		
	12010421	CABLE CONEXION DISPLAY W	W DISPLAY CONNEC. WIRING	1										
	12024183	CABLEADO TIERRA M.BOMBA	PUMP LAND WIRING	1										
	12024314	CABLEADO DOSIFICADOR DTGTE.	DETERGENT DISP. WIRING	2										

AD 15, AD 21, AD 15 B, AD 21 B, AD 15 D, AD 21 D, AD 15 C, AD 21 C, AD 21 AR+DD, AD 21 W

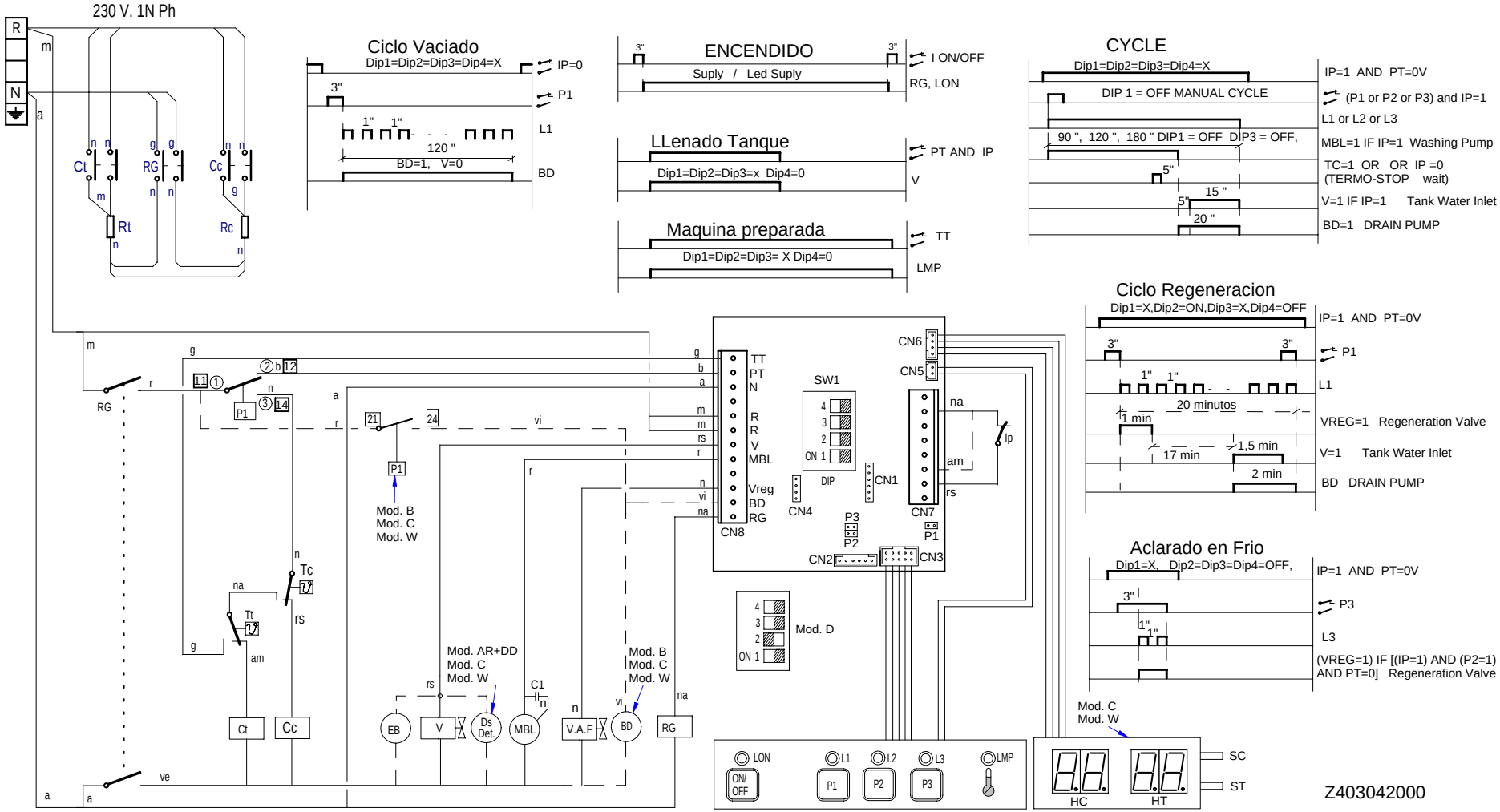

Z403042000

-	Esquema teorico LAVAVASOS AD	-	-	Z403042000	-
Zk./Nº	Pieza	Cant.	Materiala/Material	Klas. zk/Nº Clas.	Gainazal akabera/Tratamiento
Zk./Nº	Aldaketa/Modificaciones		Nork proposatua/Propuesta de	Data/Fecha	Perdoi orokorrak Tolerancias generales
.	.		.	.	
.	.		.	.	< 5 ± 0.2 / 50 ÷ 100 ± 0.8
.	.		.	.	5 ÷ 25 ± 0.4 / >100± 1
.	.		.	.	25 ÷ 50 ± 0.6 / α ± 1
.	.		.	.	

	Sinadura/Firma	Data/Fecha
Marraztua/Dibujado	M.Maillo	30-05-2009
Proiektatua/Proyectado	M.Maillo	30-05-2009
Egiaztatua/Comprobado	Z.Altube	30-05-2009

FAGOR

Fagor Industrial,Koop.Elk, Mugatua

Gainazal perdoia
Mecanizado superficial
–

Eskala/Escala
-

LAVAVASOS

Plano Zk./Plano Nº
HC - 18213

Plano hau ezin daiteke erabili, ez berriztatu, gure baimenik gabe.

- Zk. ord. du
- Zk.gaitik ord.

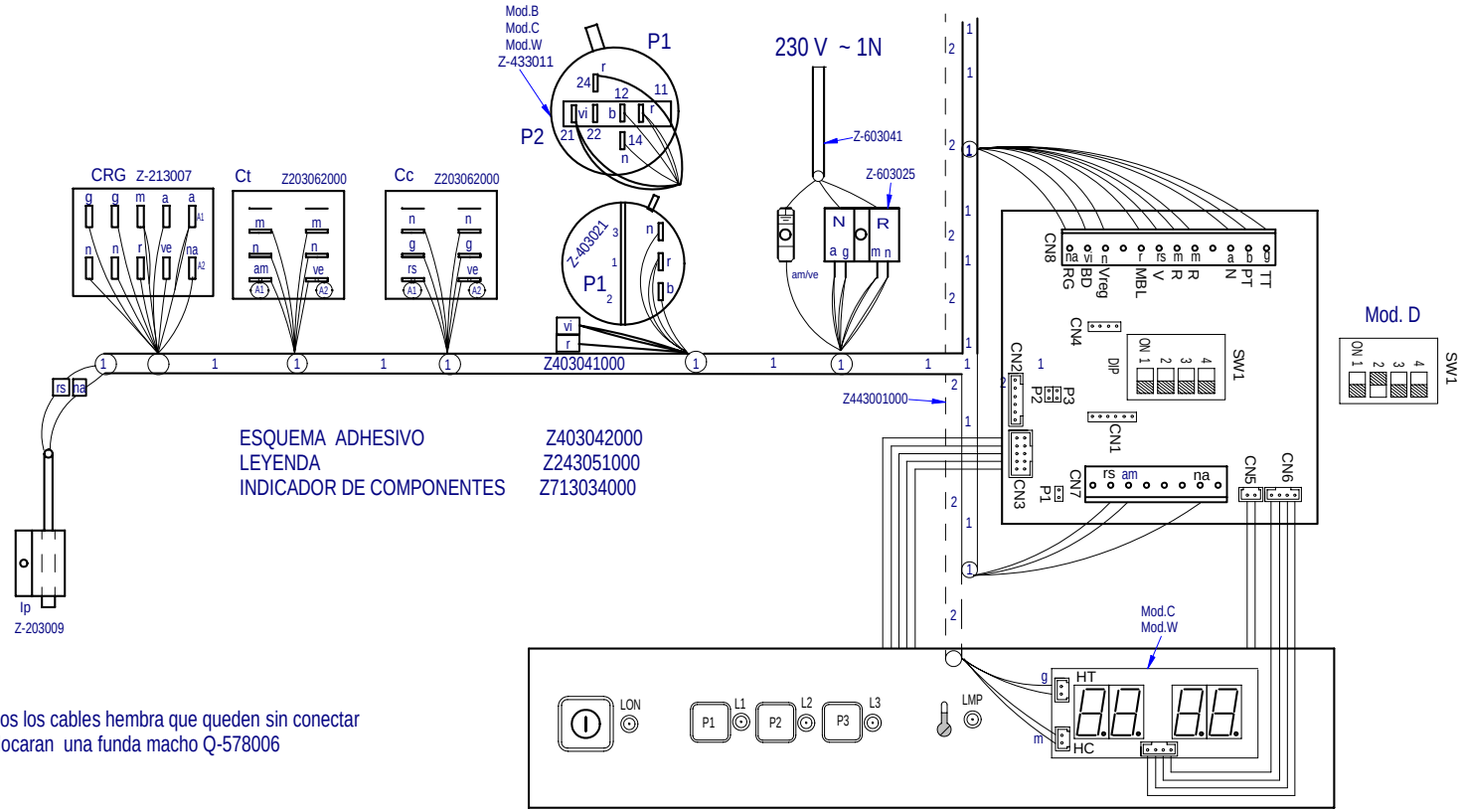

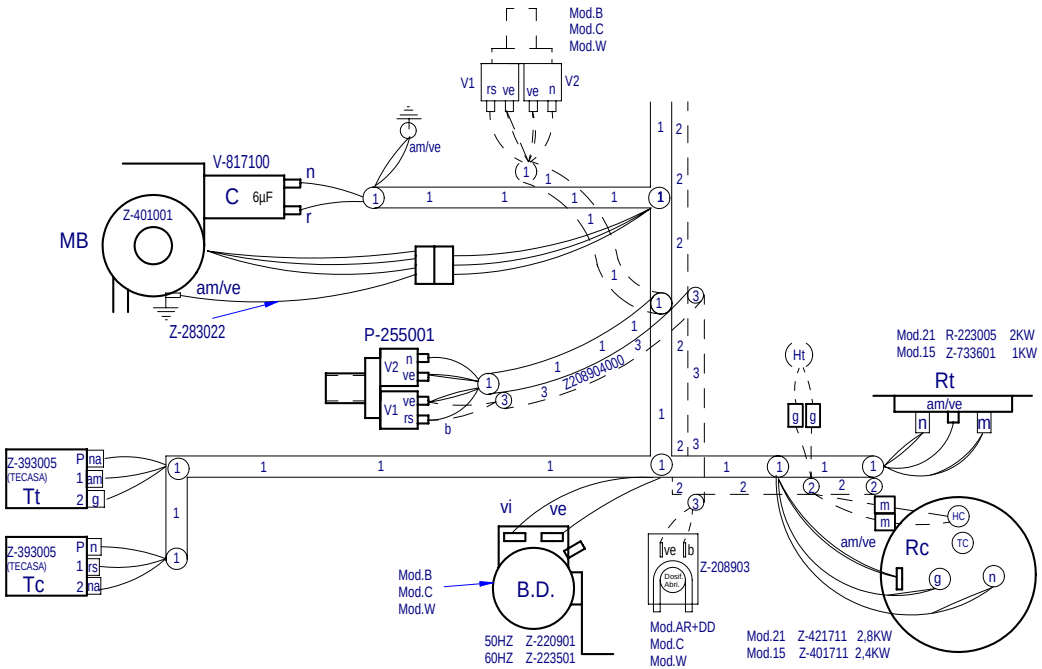

	Plano montaje LAVAVASOS GICAR		Z403043000		
Nº	Pieza	Material	Nº Clasificacion	Acabado	
Nº	Modificacion	Propuesta de	Fecha	Tolerancias generales	
				<5± / 5–25± / 25–50± / 50–100± / >100± / ○±	

	Firma	Fecha
Dibujado	M.Maillo	28-05-2009
Proyectado	M.Maillo	28-05-2009
Comprobado	Z.Altube	28-05-2009
Escala		

FAGOR

Fagor Industrial,Koop.Elk, Mugatua

Mecanizado superficial

LAVAVASOS

Plano hau ez daiteke erabil ez berrizta gure baimenitz gabe

Plano numero
HC-18214 - 00

Sustituye al Nº

Sustituido por

LEYENDA APERTURA FRONTAL

	ESPAÑOL	FRANÇAIS	ENGLISH	DEUTSCH	ITALIANO
BD	Bomba desagüe	Pompe de vidange	Drain pump	Abflußpumpe	Pompa scarico
C 1/2/3	Condensador	Condensateur	Condenser	Kondensator	Condensatore
CMB	Contactor bomba lavado	Contacteur pompe lavage	Wash pump contactor	Kontaktschütz Waschpumpe	Contattore pompa lavaggio
Cc 1/2	Contactor calentamiento calderin	Contacteur chauf. surchauffeur	Boiler heating contactor	Kontaktschütz Boilerheizung	Contattore riscaldamento boiler
Ct	Contactor calentamiento tanque	Contacteur chaufage cuve	Tank heating contactor	Kontaktschütz Heizung Tank	Contattore riscaldamento serbatoio
CP	Rele puerta	Relais porte	Door relay	Türrelais	Rele porta
Ds.Det.	Dosificador detergente	Dosseur de detergent	Detergent doser	Dosierer Spülmittel	Dosatore detersivo
E.B	Electrobomba de presion	Electropompe de pression	Electric pressure pump	Elektro-Drucksteigungspumpe	Electropompa pressione
IG	Interruptor general	Interrupteur general	Main switch	Hauptschalter	Interruttore generale
IP	Micro puerta	Micro porte	Door microswitch	Mikroschalter Tür	Micro porta
L1	Piloto de encendido	Voyant funcionement	Operation light	Betriebsanzeigelampe	Spia accensione
L2	Piloto marcha	Voyant demarrage	Start light	Startanzeigelampe	Spia avvio
L3	Piloto maquina preparada	Voyant machine prêt	Light machine ready	Betriebsbereitschaftsanzeigelampe	Pilota macchina preparata
MBL	Bomba lavado	Pompe lavage	Wash pump	Waschpumpe	Pompa lavaggio
M	Motor programador	Moteur du programmateur	Motor programmer	Motor Programmiervorrichtung	Motore programmatore
M Av. R	Motor program. avance rapido	Moteur du progr.avance rapide	Motor program. rapid advance	Motor Programmiervorrich. schneller Vorlauf	Motore programmatore avanzamento rapido
M1	Micro programador marcha	Micro du programm. de marche	Micro programmer on	Motor Programmiervorrich. Betrieb	Micro programma. di funzionamento
M2	Micro programador lavado	Micro du programm. de lavage	Micro programmer wash	Motor Programmiervorrich. Waschen	Micro programmatore di lavaggio
M3	Micro programador aclarado	Micro du programm. de rinçage	Micro programmer on	Motor Programmiervorrich. Spülen	Micro programmatore di risciacquo
M4	Micro programador Termo-stop	Micro du programm. Termo-stop	Micro programmer Termo-stop	Motor Programmiervorrich. Thermo-Stop	Micro programmatore Termo-stop
M5	Micro programador avance	Micro du programm. avance	Micro programmer advance	Motor Programmiervorrich. Vorlauf	Micro programmatore avanzamento
P, P1, P5	Presostato	Pressostat	Pressure switch	Druckwächter	Pressostato
P2, P3, P4	Presostato limitador	Pressostat de securité	Hi-limit pressure switch	Begrenzer Druckwächter	Pressostato limitatore
RC	Resistencia calderin	Resistance surchauffeur	Boiler heating element	Heizwiderstand Boiler	Resistenza boiler
RT	Resistencia tanque	Resistance cuve	Tank heater	Heizwiderstand Tank	Resistenza serbatoio
Tt	Termostato tanque	Thermostat de cuve	Tank thermostat	Thermostat Tank	Termostato serbatoio
TC	Termostato calderin	Thermostat surchauffeur	Boiler thermostat	Thermostat kessel	Termostato boiler
TSC	Limitador calderin	Limiteur surchauffeur	Boiler Hi-limit	Begrenzer Boiler	Limitatore boiler
TSTP	Termostato termo-stop	Thermostat Termo-stop	Termo-stop Thermostat	Thermostat Termo-stop	Termostato Termo-stop
V	Electrovalvula llenado y aclarado	Electrovan. remplissage rinçage	Fill and rinse valve	Elektroventil Füllen und Spülen	Elettroval. riempimento e risciacquo
COLOR	COLORES	COULEURS	COLOUR	FARBEN	COLORE
a =	Azul	Bleu	Blue	Blau	Blu
am =	Amarillo	Jaune	Yellow	Gelb	Giallo
am/ve =	Amarillo/verde	Jaune / vert	Yellow / green	Gelb/grün	Giallo/verde
b =	Blanco	Blanc	White	Weiß	Bianco
g =	Gris	Gris	Grey	Grau	Grigio
m =	Marrón	Marron	Brown	Braun	Marrone
n =	Negro	Noir	Black	Schwarz	Nero
na =	Naranja	Orange	Orange	Orange	Arancio
r =	Rojo	Rouge	Red	Rot	Rosso
rs =	Rosa	Rose	Pink	Rosa	Roseo
ve =	Verde	Vert	Green	Grün	Verde
vi =	Violeta	Violet	Purple	Violett	Viola

Z243051000