DESPIECE TECNICO

Lavadoras
Lava-linge
Washing machines
Waschmaschine
Lavatrici
Máquinas de lavar roupa

Modelos:

LB-13 M
LB-18 M

Marzo 2007 March
Revisado Enero 2012 January Revised

FAGOR

FAGOR INDUSTRIAL

Fagor Industrial

LAVADORA MODELO LB-13-18 M



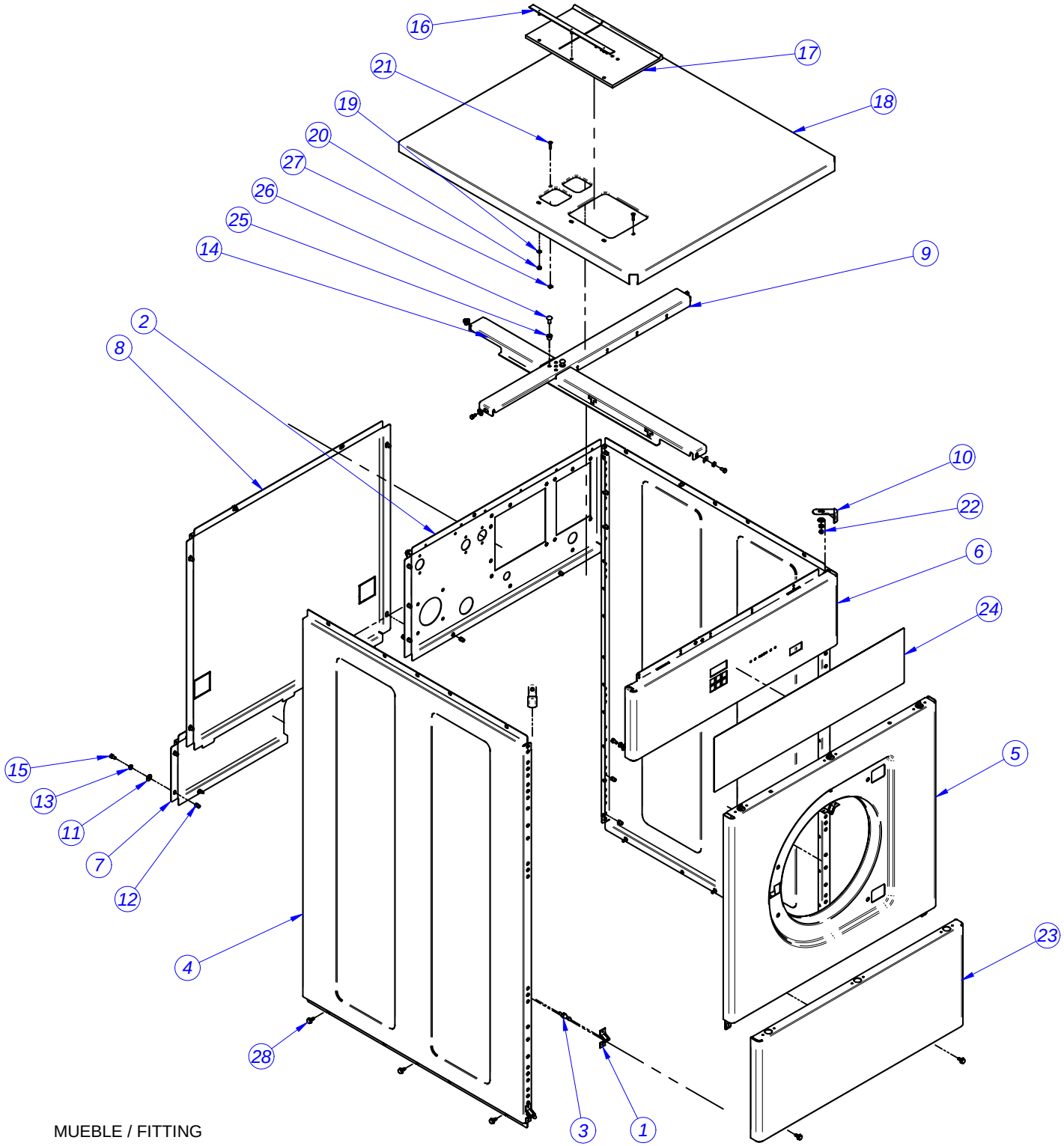

MUEBLE / FITTING

MOD.	LAVAVADORA / WASHING MACHINE	ZONA / ZONE	MUEBLE / FITTING	PLANO DIAGRAM	

ITEM	CODIGO CODE	DENOMINACION	DENOMINATION	LB-13M	LB-18M						
1	X010503000	CIERRE MUELLE FREI.700	SPRING LOCK FREI.700	7	7						
2	P620331000	PANEL POSTERIOR TOMAS 13 V2	INLETS REAR PANEL 13 V2	1	_						
2	P630317000	PANEL POSTERIOR TOMAS 18 V2	INLETS REAR PANEL 18 V2	_	1						
3	X012612000	PITON CIERRE	LOCK SPIKE	7	7						
4	P620360000	PANEL LATERAL 13 V2	SIDE PANEL 13 V2	2	_						
4	P630342000	PANEL LATERAL 18 V2	SIDE PANEL 18 V2	_	2						
5	P480301000	PANEL FRONTAL LC-13	FRONT PANEL LC-13	1	_						
5	P490301000	PANEL FRONTAL LC-18	FRONT PANEL LC-18	_	1						
6	P620348000	PORTAMANDOS COMP. 13 M	COMP. CONTROL HOLDER 13M	1	_						ELIMINADO 02.03.09
6	P620367000	PORTAMANDOS COMP. 13 M	COMP. CONTROL HOLDER 13M	1	_						INTRODUCIDO 02.03.09
6	P630324000	PORTAMANDOS COMP. 18 M	COMP. CONTROL HOLDER 18M	_	1						ELIMINADO 02.03.09
6	P630346000	PORTAMANDOS FAGOR18 M	FAGOR CONTROL HOLDER 18M	_	1						INTRODUCIDO 02.03.09
7	P620306000	PANEL POSTERIOR DESAGÜE 13	REAR PANEL DRAIN PIPE 13	1							
7	P630307000	PANEL POSTERIOR DESAGÜE 18	REAR PANEL DRAIN PIPE 18	_	1						
8	P620334000	PANEL POSTERIOR 13 V2	REAR PANEL 13 V2	1	_						
8	P630318000	PANEL POSTERIOR 18 V2	REAR PANEL 18 V2	_	1						
9	P620354000	TRAVESAÑO PARALELO 13 V2	PARALLEL CROSSBAR 13 V2	1	_						
9	P630330000	TRAVESAÑO PARALELO 18 V2	PARALLEL CROSSBAR 18 V2	_	1						
10	P620316000	CANTONERA ENCIMERA	TOP CORNER PROTECTOR	2	2						
11	Q302022000	ARANDELA 16X6X1.2 A.304	WASHER 16X6X1.2 A.304	28	28						
12	Q221342000	REMACHE EXAGONAL M5	HEXAGONAL RIVET M5	30	30						
13	Q242030000	ARAND.ABAN. A5 A.304	WASHER A5 A.304	25	25						
14	P620353000	TRAVESAÑO LONGITUDINAL 13 V3	LONGITUDINAL CROSSBAR 13	1	_						
14	P630329000	TRAVESAÑO LONGITUDINAL 18 V3	LONGITUDINAL CROSSBAR 18 V	_	1						
15	Q012031000	TORN.EXA. M5X10 A.304	HEX BOLT M5X10 A.304	26	26						
16	P440705000	SOPOR.TAPA CUB. COMPLETA	TUB TRAY SUPPORT, COMPLETE	1	1						
17	P440704000	TAPA CUBETA 1002436	TRAY LID 1002436	1	1						
18	P620345000	ENCIMERA LF-13 COMPL.	COMPLETE WORKTOP 13	1	_						
18	P630323000	ENCIMERA COMPLETA 18 V2	COMPLETE WORKTOP 18 V2	_	1						
19	Q232030000	ARANDELA A5	WASHER A5	3	3						
20	Q162030000	TUER.EXA. M5	HEX NUT M5	3	3						

MOD.	LAVAVADORA / WASHING MACHINE	ZONA / ZONE	MUEBLE / FITTING	PLANO DIAGRAM	

ITEM	CODIGO CODE	DENOMINACION	DENOMINATION	LB-13M	LB-18M						
21	Q042022000	TORN.AVE.M4X15	COUNTERSUNK SCREW M4X15	2	2						
22	Q221308000	TUE.EX.AUT.M5 H.ZINCADA	HEX.SCREW.AUT.M5 H.ZINC	2	2						
23	P480302000	ZOCALO LC-13	SKIRTING LC-13	1	_						
23	P490302000	ZOCALO LC-18	SKIRTING LC-18	_	1						
24	P610319000	ADHESIVO PORTAMANDOS M	ADHESIVE CONTROL HOLDER M	1	1						ELIMINADO 02.03.09
24	P610347000	ADHESIVO TECLAS FAGOR	KEY ADHESIVE FAGOR	1	1						INTRODUCIDO 02.03.09
25	Q411310000	COLLAR MAXLOK 6.4	MAXLOK COLLAR 6.4	2	2						
26	Q411309000	REMACHE MAXLOK 6.4	MAXLOK RIVET 6.4	2	2						
27	Q222004000	TUERCA CUADRADA M.4	SQUARE NUT M.4	2	2						
28	Q151335000	TORN.C/ARAND.A.5.6X13	BOLT W/WASHER.A.5.6X13	10	10						

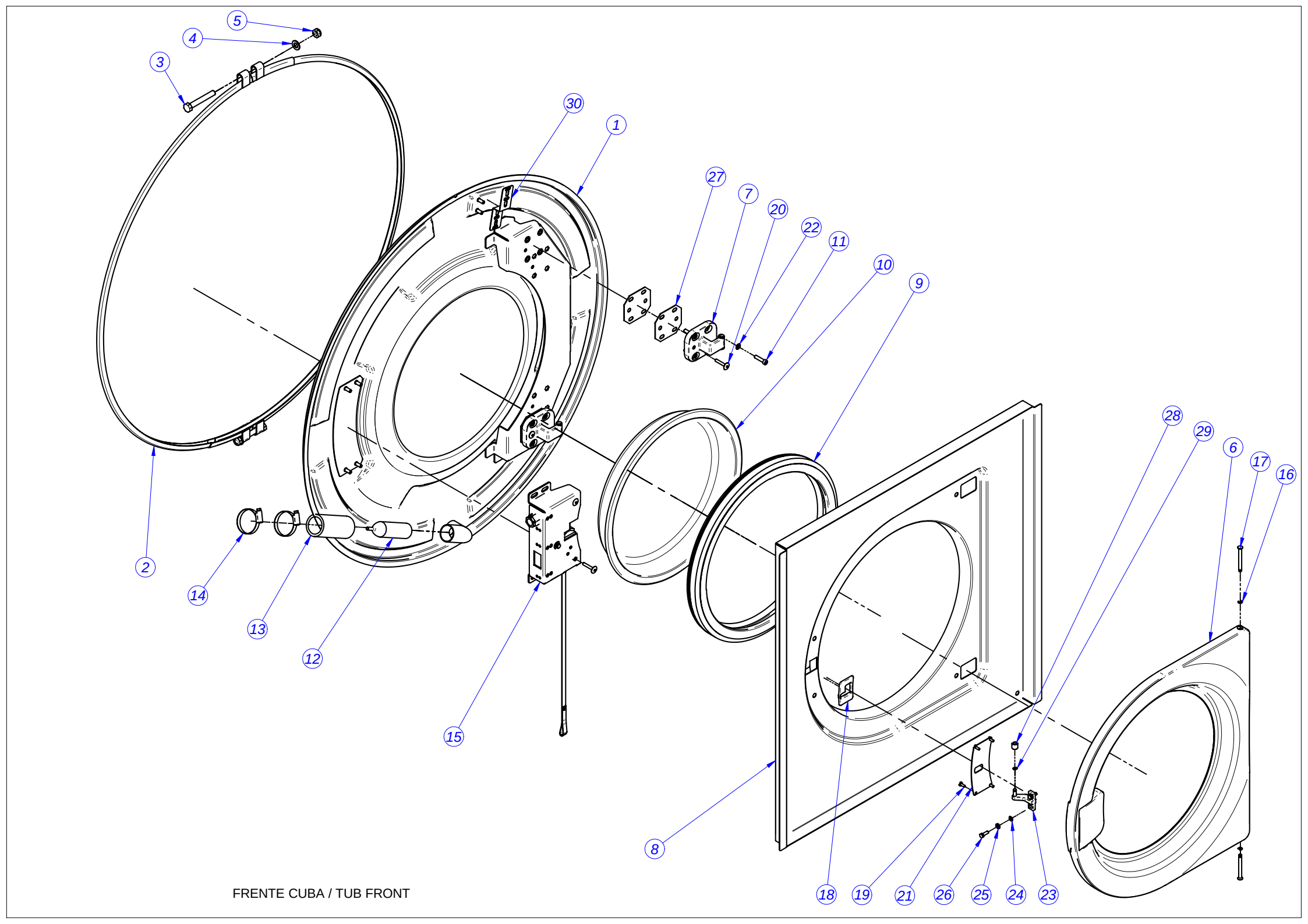

FRENTE CUBA / TUB FRONT

MOD.	LAVAVADORA / WASHING MACHINE	ZONA / ZONE	FRENTE CUBA / TUB FRONT	PLANO DIAGRAM	

ITEM	CODIGO CODE	DENOMINACION	DENOMINATION	LB-13M	LB-18M						
1	P626112000	FRENTE CUBA COMPLETA 13	COMPLETE TUB FRONT 13	1	_						
1	P636110000	FRENTE CUBA COMPLETA 18	COMPLETE TUB FRONT 18	_	1						
2	P626118000	CIERRE CUBA COMPL. 13	COMPLETE LOCK 13	1	_						
2	P636112000	CIERRE CUBA 18 COMPLETO	COMPLETE LOCK 18	_	2						
3	Q011369000	TORN.EX.M10X70 H.ZINCADO	HEX BOLT M10X70 H.ZINCADO	2	2						
4	Q232060000	ARANDELA A10	WASHER A10	2	2						
5	Q221306000	TUE.EX.AUT.M10 8.8 ZIN	HEX.SCREW.AUT.M10 8.8 ZIN	2	2						
6	P620527000	PUERTA SEMICOMP. FAGOR 13,18	DOOR SEMICOMP. FAGOR 13,18	1	1						
7	P620502000	BISAGRA PUERTA	DOOR HINGE	2	2						
8	P620501000	FONDO PUERTA 13,18	BOTTOM DOOR 13.18	1	1						
9	P620528000	JUNTA PUERTA 13,18,25	DOOR JOINT 1002315	1	1						
10	P530503000	MIRILLA PUERTA	DOOR PEEPHOLE	8	8						
11	Q122044000	TORN. ALLEN M6x25	BOLT, ALLEN M6x25	1	1						
12	P445002000	CAMARA PRESOSTATO	PRESSURE SWITCH	1	1						
S/Nº	P613021000	REDUCCION PRESOSTATO	PRESSURE REDUCTION	1	1						INTRODUCIDO 23.10.07
13	P502106000	TUBO REBOSADERO	OVERFLOW PIPE	2	2						
14	Q881306000	ABRAZADERA 32-50L	CLAMP 32-50L	1	1						
15	P620516000	CIERRE COMPLETA	LOCK COMPL.	2	2						ELIMINADO 13.12.07
15	P620531000	CIERRE FAGOR 13,18,25	LOCK 1FAGOR 13,18,25	2	2						INTRODUCIDO 13.12.07
16	Q272020000	ARANDELA SEGURIDAD 4	WASHER SAFETY 4	2	2						
17	P620514000	PASADOR PUERTA	DOOR PIN	1	1						
18	P620515000	EMBELLECEDOR CIERRE	LOCK TRIM	1	1						
19	Q032021000	TORN.ALOM.M4X10	SCREW M5X10	4	4						
20	Q152038000	TORN.AMARE M5X30	TIE BOLT M5X30	4	4						
21	P620512000	TAPA CIERRE 13,18	LOCK COVER 13,18	1	1						ELIMINADO 01.09.10
21	P627816000	TAPA CIERRE PRIMER	LOCK COVER PRIMER	1	1						INTRODUCIDO 01.09.10
22	Q232040000	ARANDELA A6	WASHER A6	8	8						
23	P620505000	GANCHO REGULABLE CIERRE	LOCK ADJUSTABLE HOOK	2	2						
24	Q232030000	ARANDELA A5	WASHER A5	2	2						
25	Q242030000	ARAND.ABAN. A5 A.304	WASHER A5 A.304	2	2						
26	Q012032000	TORN.EXA. M5X15 A.304	HEX BOLT M5X15 A.304	4	4						

MOD.	LAVAVADORA / WASHING MACHINE	ZONA / ZONE	FRENTE CUBA / TUB FRONT	PLANO DIAGRAM	

ITEM	CODIGO CODE	DENOMINACION	DENOMINATION	LB-13M	LB-18M						
27	P620521000	CALZO BISAGRA	SHIM HINGE	6	6						
28	P610506000	CASQUILLO PUERTA	DOOR BUSHING	1	1						
29	Q302061000	ANILLO SEG. A6 DIN471	SAF. RING A6 DIN471	1	1						
30	P626128000	SOPORTE CONDUCTO PRESOSTAT	DUCT PRESSURE SUPPORT	1	1						

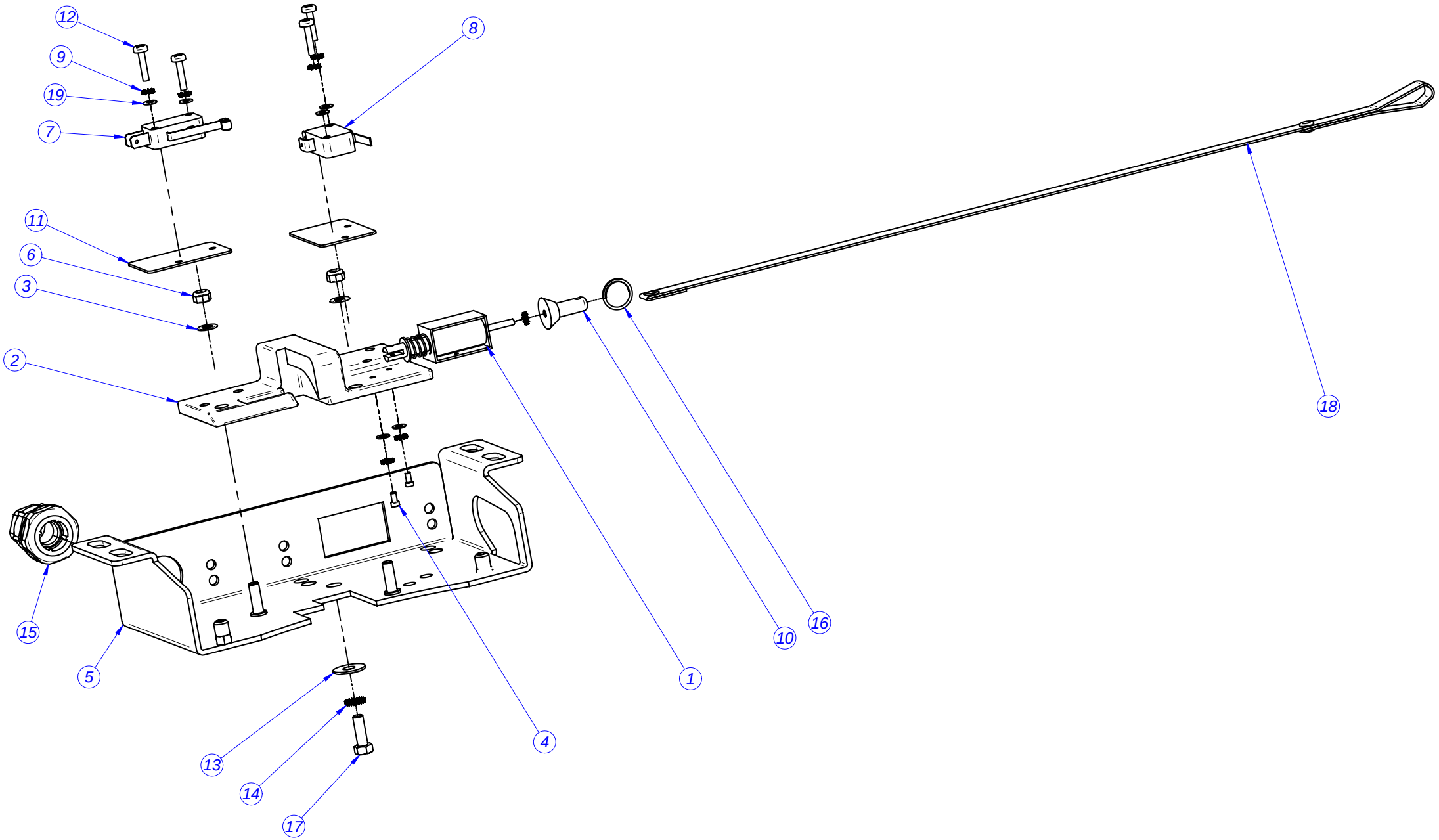

CIERRE / LOCK

MOD.	LAVAVADORA / WASHING MACHINE	ZONA / ZONE	CIERRE / LOCK	PLANO DIAGRAM	

ITEM	CODIGO CODE	DENOMINACION	DENOMINATION	LB-13M	LB-18M						
	P620516000	**CIERRE COMPLETO**	**COMPLETE LOCK**	**1**	1						ELIMINADO 13.12.07
	P620531000	**CIERRE COMPLETO**	**COMPLETE LOCK**	**1**	1						INTRODUCIDO 13.12.07
1	P613002000	ELECTROIMAN PUERTA	DOOR ELECTROMAGNET	1	1						
2	P620522000	BASE CIERRE V2	LOCK BASE V2	1	1						
3	Q232030000	ARANDELA A5	WASHER A5	2	2						
4	Q151396000	TORN. ALLEN M2.5x5	HEXAGONAL SCREW M2.5x5	2	2						
5	P620530000	CALZO CIERRE COMPLETO	COMPLETE LOCK WEDGE	1	1						
6	Q222030000	TUER.AUTOB.M5	SELF-LOCK.NUT.M5	2	2						
7	R010534000	INTERRUPTOR PUERTA	DOOR SWITCH	1	1						
8	P620526000	INTERRUPTOR PUERTA PLANO	FLAT DOOR SWITCH	1	1						
9	Q242010000	ARAND.ABAN. A.3 A304	WASHER A.3 A304	8	8						
10	P620529000	DESBLOQUEO	UNLOCK	1	1						
11	R010535000	PLACA SEPARADORA	SPACER PLATE	2	2						
12	Q032012000	TORNILLO ALOMADO M3X15	CURVED SCREW M3X15	4	4						
13	Q302022000	ARANDELA 16X6X1.2 A.304	WASHER 16X6X1.2 A.304	1	1						
14	Q242030000	ARAND.ABAN. A5 A.304	WASHER A5 A.304	1	1						
15	R073004000	PRENSA ESTOPAS	STUFFING BOX	1	1						
16	P620525000	ANILLO ELECTROIMAN	ELECTROMAGNET RING	1	1						
17	Q012032000	TORN.EXA. M5X15 A.304	HEX BOLT M5X15 A.304	1	1						
18	P620520000	TIRADOR PUERTA	DOOR PULL	1	1						
19	Q232010000	ARANDELA PLANA A3,DIN125	FLAT WASHER A3,DIN125	6	6						
20	P623010000	CABLEADO PUERTA	DOOR WIRING	1	1						

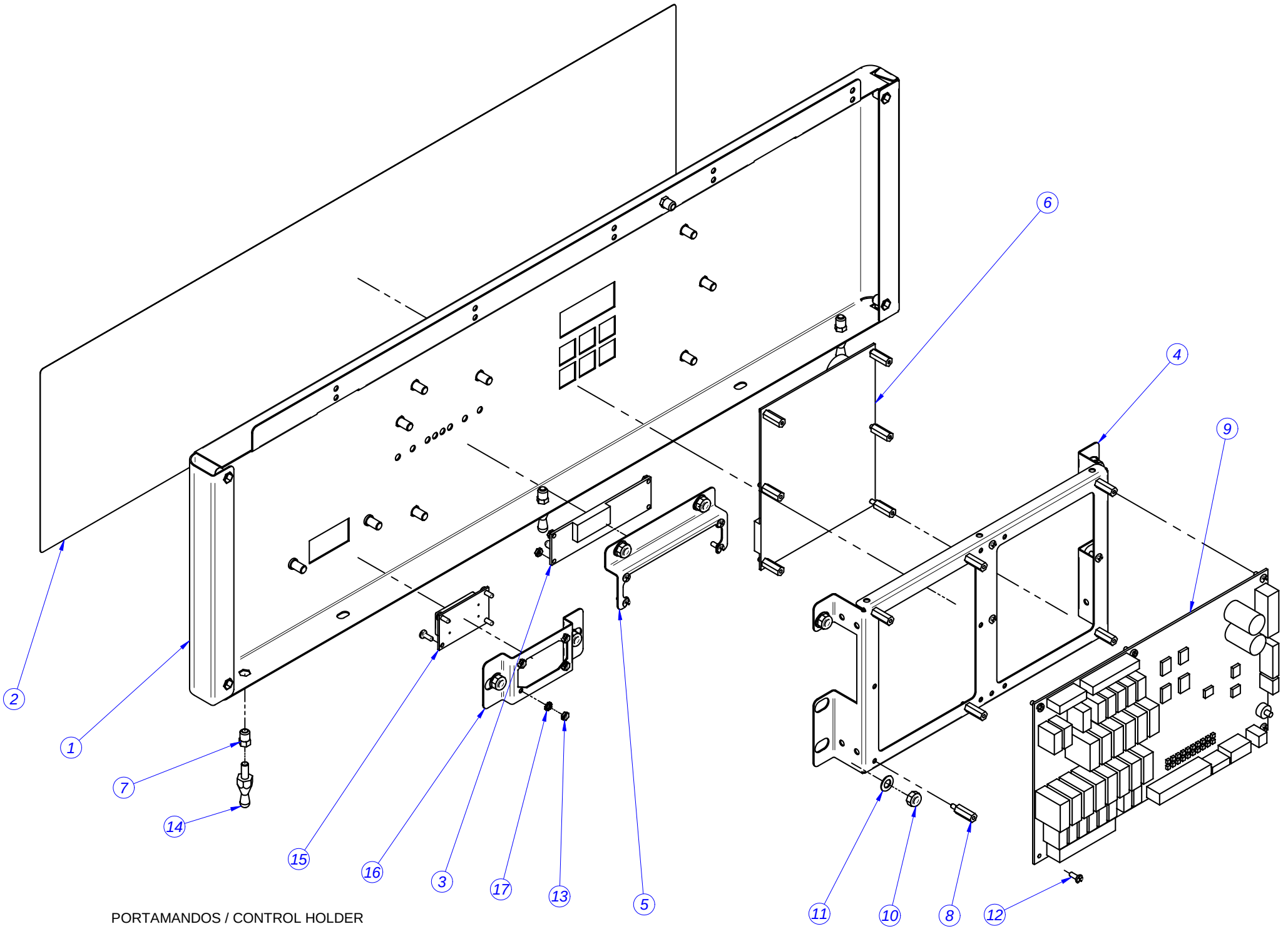

PORTAMANDOS / CONTROL HOLDER

MOD.	LAVAVADORA / WASHING MACHINE	ZONA / ZONE	PORTAMANDOS / CONTROL HOLDER	PLANO DIAGRAM	

ITEM	CODIGO CODE	DENOMINACION	DENOMINATION	LB-13M	LB-18M						
1	P620348000	PORTA MANDOS COMP. 13 M	COMP. CONTROL HOLDER 13M	1	_						ELIMINADO 02.03.09
1	P620367000	PORTA MANDOS COMP. 13 M	COMP. CONTROL HOLDER 13M	1	_						INTRODUCIDO 02.03.09
1	P630324000	PORTA MANDOS COMP. 18 M	COMP. CONTROL HOLDER 18M	_	1						ELIMINADO 02.03.09
1	P630346000	PORTA MANDOS COMP. 18 M	COMP. CONTROL HOLDER 18M	_	1						INTRODUCIDO 02.03.09
2	P610319000	ADHESIVO PORTAMANDOS M	ADHESIVE CONTROL HOLDER M	1	1						ELIMINADO 02.03.09
2	P610347000	ADHESIVO TECLAS FAGOR	KEY ADHESIVE FAGOR	1	1						INTRODUCIDO 02.03.09
3	P623023000	PLACA LEDS	LED PLATE	1	1						
4	P620355000	SOPORTE PROGRAMADOR M	PROGRAMMER SUPPORT M	1	1						
5	P620356000	SOPORTE PLACA LEDS	LED PLATE SUPPORT	1	1						
6	P613018000	CIRCUITO VISUALIZACION M	DISPLAY CIRCUIT M	1	1						
7	Q221342000	REMACHE EXAGONAL M5	HEXAGONAL RIVET M5	8	8						
8	T133007000	DISTANCIADOR M3	SPACER M3	12	12						
9	P613019000	PLACA ENTRADAS-SALIDAS M	INLET-OUTLET PLATE M	1	1						
10	Q222012000	TUER.AUTOB.M6	SELF-LOCK.NUT.M6	8	8						
11	Q232040000	ARANDELA A6	WASHER A6	8	8						
12	T133008000	TORNILLO AMARRE M3	ANCHORING SCREW M3	18	18						
13	Q162010000	TUER.EXA.M3	HEX.SCREW.M3	8	8						
14	X012612000	PITON CIERRE	LOCK SPIKE	7	7						
15	P623017000	INTERRUPTOR GENERAL C.I.	C.I. POWER SWITCH	1	1						ELIMINADO 04.01.10
15	Z218030000	INTERRUPTOR RELE C.I.	C.I. RELAY SWITCH	1	1						INTRODUCIDO 04.01.10
16	P620338000	PORTA INTERRUPTOR C.I.	C.I. SWITCH HOLDER	1	1						ELIMINADO 04.01.10
16	P640325000	PORTA INTERRUPTOR C.I.	C.I. SWITCH HOLDER	1	1						INTRODUCIDO 04.01.10
17	Q242010000	ARAND.ABAN. A.3 A304	WASHER A.3 A304	4	4						

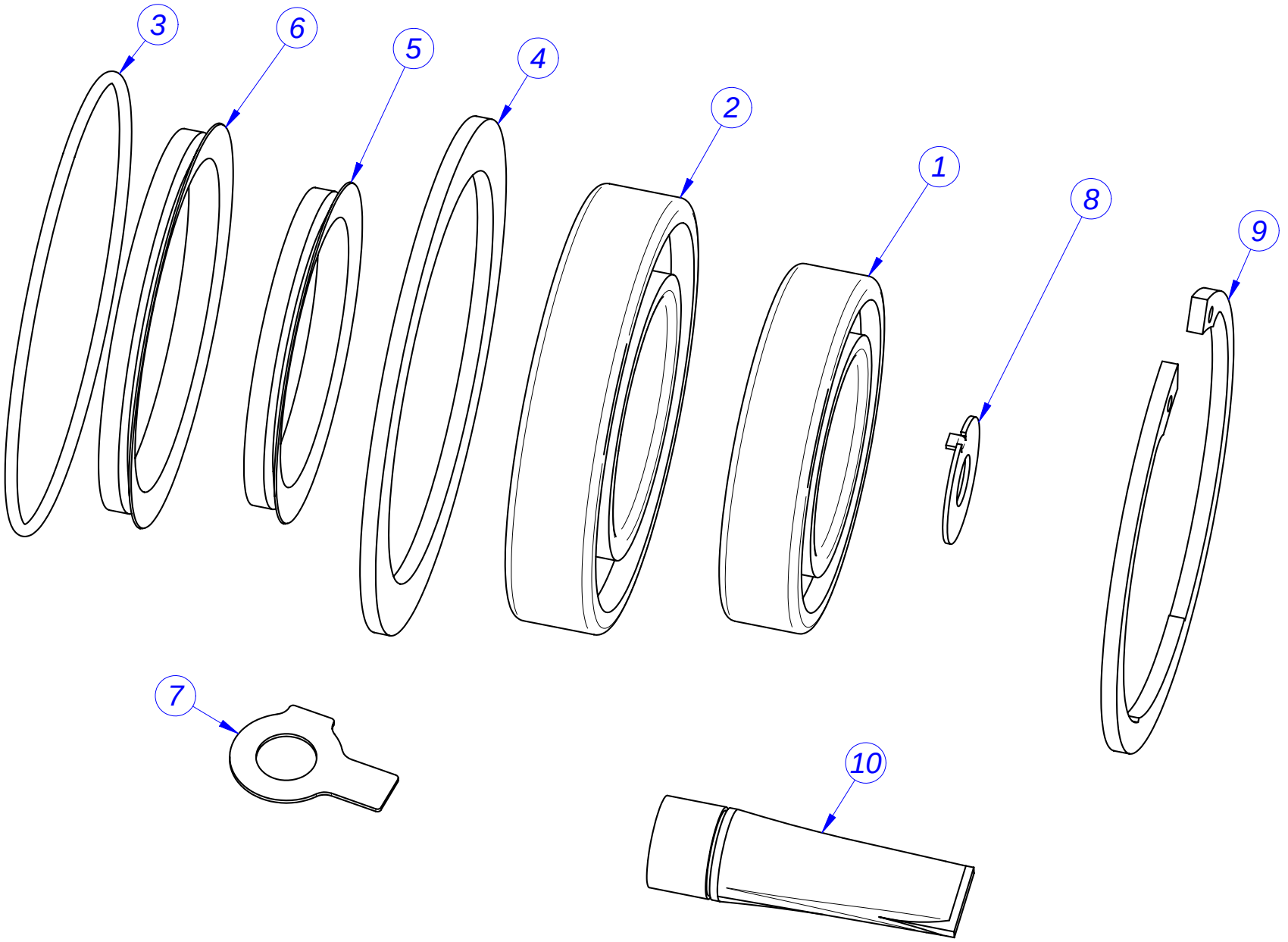

KIT RODAMIENTOS / BEARING KIT

MOD.	LAVAVADORA / WASHING MACHINE	ZONA / ZONE	KIT RODAMIENTOS / BEARING KIT	PLANO DIAGRAM	

ITEM	CODIGO CODE	DENOMINACION	DENOMINATION	LB-13M	LB-18M						
	1300000084	**KIT RODAMIENTOS 13**	**BEARING KIT 13**	**1**	_						
	1300000085	**KIT RODAMIENTOS 18**	**BEARING KIT 18**	_	**1**						
1	P626008000	RODAMIENTO 50/90/20	BEARING 50/90/20	1	1						
2	P626009000	RODAMIENTO 60/110/22	BEARING 60/110/22	1	1						
3	Q307075000	JUNTA TORICA 114x3	O' RING 114x3	1	_						
3	Q307077000	JUNTA TORICA 128x3	O' RING 128x3	_	1						
4	P626007000	JUNTA CASQUILLO RETENES 13	BUSHING GASKET SEALS 13	1	_						ELIMINADO 01.10.09
4	P616013000	JUNTA CASQUILLO RETEN. 10,13,V2	BUSHING GASKET SEALS 10,13,	1	_						INTRODUCIDO 01.10.09
4	P636005000	JUNTA CASQUILLO RETENES 18	BUSHING GASKET SEALS 18	_	1						ELIMINADO 01.10.09
4	P636011000	JUNTA CASQUILLO RETENES 18	BUSHING GASKET SEALS 18	_	1						INTRODUCIDO 01.10.09
5	P624913000	RETEN V-RING 70	V-RING RETAINER 70	1	_						
5	P634911000	RETEN V-RING 78	V-RING RETAINER 78	_	1						
6	P624914000	RETEN V-RING 85	V-RING RETAINER 85	1	_						
6	P634912000	RETEN V-RING 92	V-RING RETAINER 92	_	1						
7	Q271302000	ARANDELA DE SEGURIDAD 13	SAFETY WASHER 13	8	_						
7	Q271303000	ARANDELA DE SEGURIDAD 15	SAFETY WASHER 15	8	8						
8	Q301329000	ARANDELA DE SEGURIDAD 13	SAFETY WASHER 13	1	1						
9	Q301030000	ANILLO DE SEGURIDAD INT. 90	CIRCLIP INT. 90	1	_						
9	Q301036000	ANILLO DE SEGURIDAD J110X4	CIRCLIP INT. J110X4	_	1						
10	P536544000	GRASA AMBLYGON TA 15/2	AMBLYGON GREASE TA 15/2	1	1						

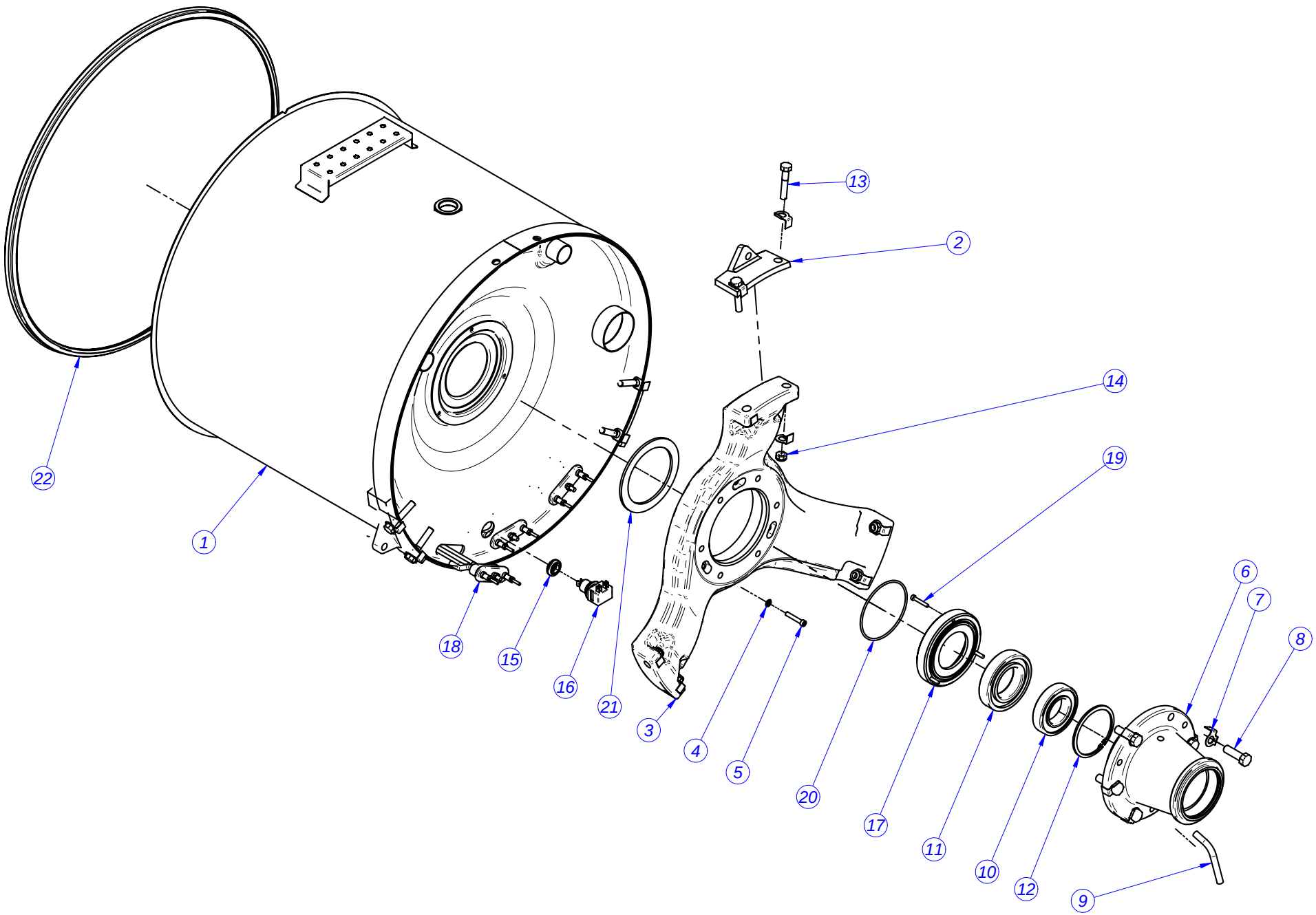

CUBA / TUB

MOD.	LAVAVADORA / WASHING MACHINE	ZONA / ZONE	CUBA / TUB	PLANO DIAGRAM	

ITEM	CODIGO CODE	DENOMINACION	DENOMINATION	LB-13M	LB-18M						
1	P626115000	CUBA COMPLETA 13	COMPLETE TUB 13	1	_						
1	P636107000	CUBA COMPLETA 18	COMPLETE TUB 18	_	1						
2	P626014000	APOYO TORNILLOS 13	BOLT SUPPORT 13	3	_						
2	P636009000	APOYO TORNILLOS 18	BOLT SUPPORT 13	_	3						
3	P626001000	REFUERZO FONDO CUBA 13	TUB BASE REINFORCEMEN. 13	1	_						
3	P636001000	REFUERZO FONDO CUBA 18	TUB BASE REINFORCEMEN. 18	_	1						
4	Q232040000	ARANDELA A6	WASHER A6	3	3						
5	Q122045000	TORN. ALLEN M6x35 INOX	HEXAGONAL SCREW M6x35 STA	3	3						
6	P626002000	SOPORTE RODAMIENTOS 13	BEARING SUPPORT13	1	_						
6	P636002000	SOPORTE RODAMIENTOS 18	BEARING SUPPORT18	_	1						
7	Q271302000	ARAND. SEG. 13 DIN 463	SAFETY WASHER 13 DIN 463	18	_						
7	Q271303000	ARAND. SEG. 15 DIN 463	SAFETY WASHER 15 DIN 463	_	18						
8	Q151529000	TORN. EXAG. M12x55	HEX. BOLT M12x40 INOX	6	_						
8	Q151535000	M14x70 12.9 DIN 933	M14x70 12.9 DIN 933	_	6						
9	P626015000	TUBO EVACUACION 8,13,18	DRAINAGE PIPE 8,13,18	1	1						
10	P626008000	RODAMIENTO 6210-2Z	BEARING 6210-2Z	1	1						
11	P626009000	RODAMIENTO 6212-2RS1	BEARING 6211-2RS1	1	1						
12	Q301030000	ANILLO SEG. INT. 90	INT. SAFETY RING 90	1	_						
12	Q301036000	ANILLO SEG. SEEGER J110x4	INT. SAFETY RING J110x4	_	1						
13	Q151530000	TORN. EXAG. M14x50 DIN 931	HEX. BOLT M10x55 DIN 931	6	_						
13	Q151589000	TORN. EXAG. M14x70 10.9	HEX. BOLT M14x70 10.9	_	6						
14	Q221307000	TUE.EX.AUT.M12	HEX.SCREW.AUT.M12	6	_						
14	Q221338000	TUE.EX.AUT.M14	HEX.SCREW.AUT.M14	_	6						
15	Z953003000	PASAMUROS BULBO	BULB WALL BUSHING	1	1						
16	P503025000	SONDA	PROBE	1	1						
17	P626003000	CASQUILLO CONTRA RETEN 13	COUNTER RETAINER BUSHING 8	1	_						
17	P636003000	CASQUILLO CONTRA RETEN 18	COUNTER RETAINER BUSHING 8	_	1						
18	P623005000	RESISTENCIA LF-13	RESISTOR LF-13	3	_						
18	P623002000	RESISTENCIA LF-18	RESISTOR LF-18	_	3						
19	Q122034000	TORN. ALLEN M5x30 INOX	HEXAGONAL SCREW M5x30 STA	3	3						

MOD.	LAVAVADORA / WASHING MACHINE	ZONA / ZONE	CUBA / TUB	PLANO DIAGRAM	

ITEM	CODIGO CODE	DENOMINACION	DENOMINATION	LB-13M	LB-18M						
20	Q307075000	JUNTA TOR. 114x3	"O" RING. 102x3	1	_						
20	Q307077000	JUNTA TOR. 128x3	"O" RING. 128x3	_	1						
21	P626007000	JUNTA CASQUILLO RETENES 13	BUSHING GASKET SEALS 13	1	_						
21	P636005000	JUNTA CASQUILLO RETENES 18	BUSHING GASKET SEALS 18	_	1						
22	P626110000	JUNTA CUBA 13	TUB GASKET 13	1	_						
22	P636108000	JUNTA CUBA 18	TUB GASKET 18	_	1						

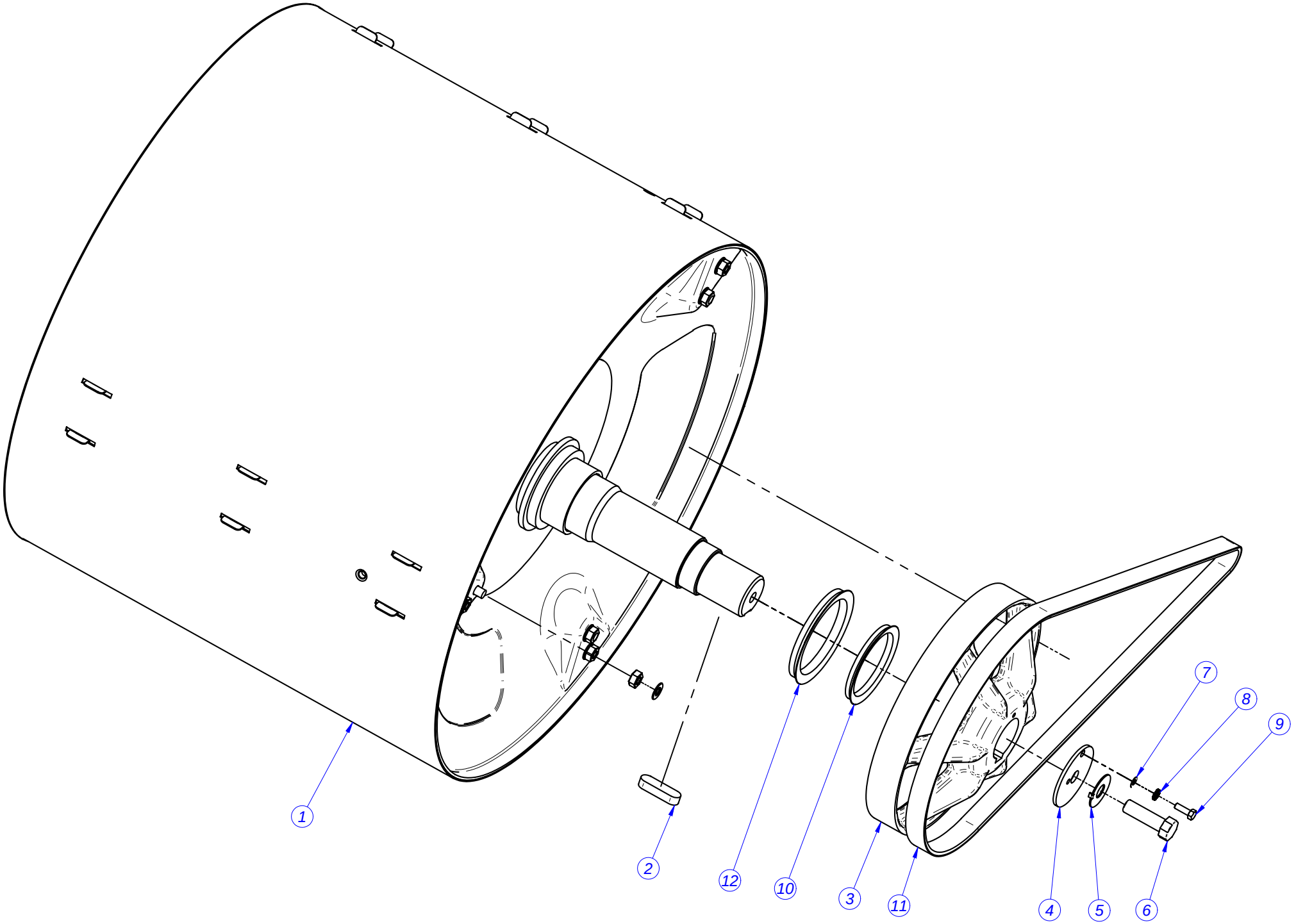

TAMBOR / DRUM

MOD.	LAVAVADORA / WASHING MACHINE	ZONA / ZONE	TAMBOR / DRUM	PLANO DIAGRAM	

ITEM	CODIGO CODE	DENOMINACION	DENOMINATION	LB-13M	LB-18M						
1	P624909000	TAMBOR COMPLETO 13	COMPLETE DRUM 13	1	_						
1	P634910000	TAMBOR COMPLETO 18	COMPLETE DRUM 18	_	1						
2	P626010000	CHAVETA 14x9x50	KEY 14x9x50	1	1						
3	P626006000	POLEA TAMBOR 13,18	DRUM PULLEY 13,18	1	1						
4	P626012000	ARANDELA POLEA 13,18	PULLEY WASHER 13,18	1	1						
5	Q301329000	ARANDELA SEGURIDAD 13	SAFETY WASHER 13	1	1						
6	Q011376000	TOR.EX.M12X40 H.ZINCADO	HEX.SCREW.M12X40 H.ZINC	1	1						
7	Q232030000	ARANDELA A5	WASHER A5	1	1						
8	Q242030000	ARAND.ABAN. A5 A.304	WASHER A5 A.304	1	1						
9	Q012032000	TORN.EXA. M5X15 A.304	HEX BOLT M5X15 A.304	1	1						
10	P624913000	RETEN V-RING VA070	V-RING RETAINER VA070	1	_						
10	P634911000	RETEN V-RING 78	V-RING RETAINER 78	_	1						
11	P625903000	CORREA 13	BELT 13	1	_						
11	P635902000	CORREA 18	BELT 18	_	1						
12	P624914000	RETEN V-RING VA085	V-RING RETAINER VA085	1	_						
12	P634912000	RETEN V-RING 92	V-RING RETAINER 92	_	1						

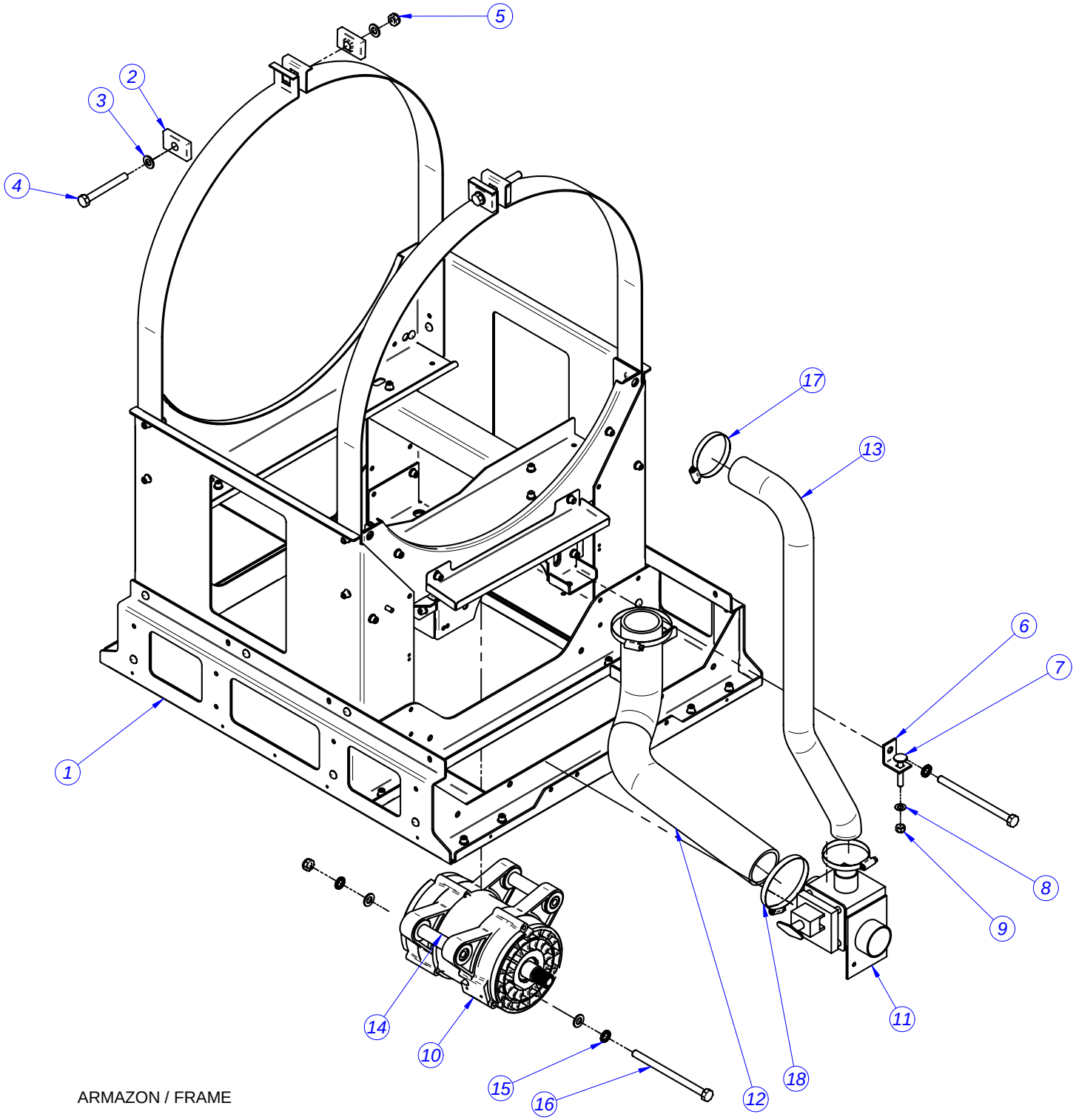

ARMAZON / FRAME

MOD.	LAVAVADORA / WASHING MACHINE	ZONA / ZONE	ARMAZON / FRAME	PLANO DIAGRAM	

ITEM	CODIGO CODE	DENOMINACION	DENOMINATION	LB-13M	LB-18M						
1	P480107000	ARMAZON COMPLETO 13	COMPLETE FRAME 13	1	_						
1	P490107000	ARMAZON COMPLETO 18	COMPLETE FRAME 18	_	1						
2	P620208000	AMARRE CUBA	TUB FASTENER	4	4						ELIMINADO 01.10.10
3	Q232060000	ARANDELA A10	WASHER A10	7	7						
4	Q011360000	TORNILLO EXAGONAL M10X80	HEXAGONAL SCREW M10X80	2	2						
5	Q221306000	TUE.EX.AUT.M10 8.8 ZIN	HEX.SCREW.AUT.M10 8.8 ZINC	4	4						
6	P620214000	TENSOR MOTOR	MOTOR TENSOR	1	1						
7	Q151398000	TORN. DIN 603 M8x45	BOLT, DIN 603 M8x45	1	1						
8	Q232050000	ARANDELA A8	WASHER A8	1	1						
9	Q221309000	TUE.EX.AUT.M8 8.8 ZINCADA	HEX.SCREW.AUT.M8 8.8 ZINC	1	1						
10	P625905000	MOTOR 13	MOTOR 13	1	_						
10	P635906000	MOTOR 18	MOTOR 18	_	1						
11	P302120000	VALVULA	VALVE	1	1						
12	P620703000	CONDUCTO DESAGUE 13	DRAIN PIPE 13	1	_						
12	P630703000	CONDUCTO DESAGUE 18	DRAIN PIPE 18	_	1						
13	P620704000	CONDUCTO REBOSADERO 13	OVERFLOW PIPE 13	1	_						
13	P630702000	CONDUCTO REBOSADERO 18	OVERFLOW PIPE 18	_	1						
14	P625901000	TUBO SOPORTE MOTOR 13	MOTOR BRACKET PIPE 13	2	_						
14	P635907000	TUBO SOPORTE MOTOR 18	MOTOR BRACKET PIPE 18	_	2						
15	Q241560000	ARAND. ABAN. A10 DIN6798	WASHER A10 DIN6798	4	4						
16	Q151525000	EXAG. M10X150(8.8) DIN931	HEX BOLT M10X150(8.8) DIN931	2	2						
17	Q881324000	ABRAZADERA 50-70L	CLAMP 50-70L	2	2						
18	Q881326000	ABRAZADERA 70-90	CLAMP 70-90	2	2						

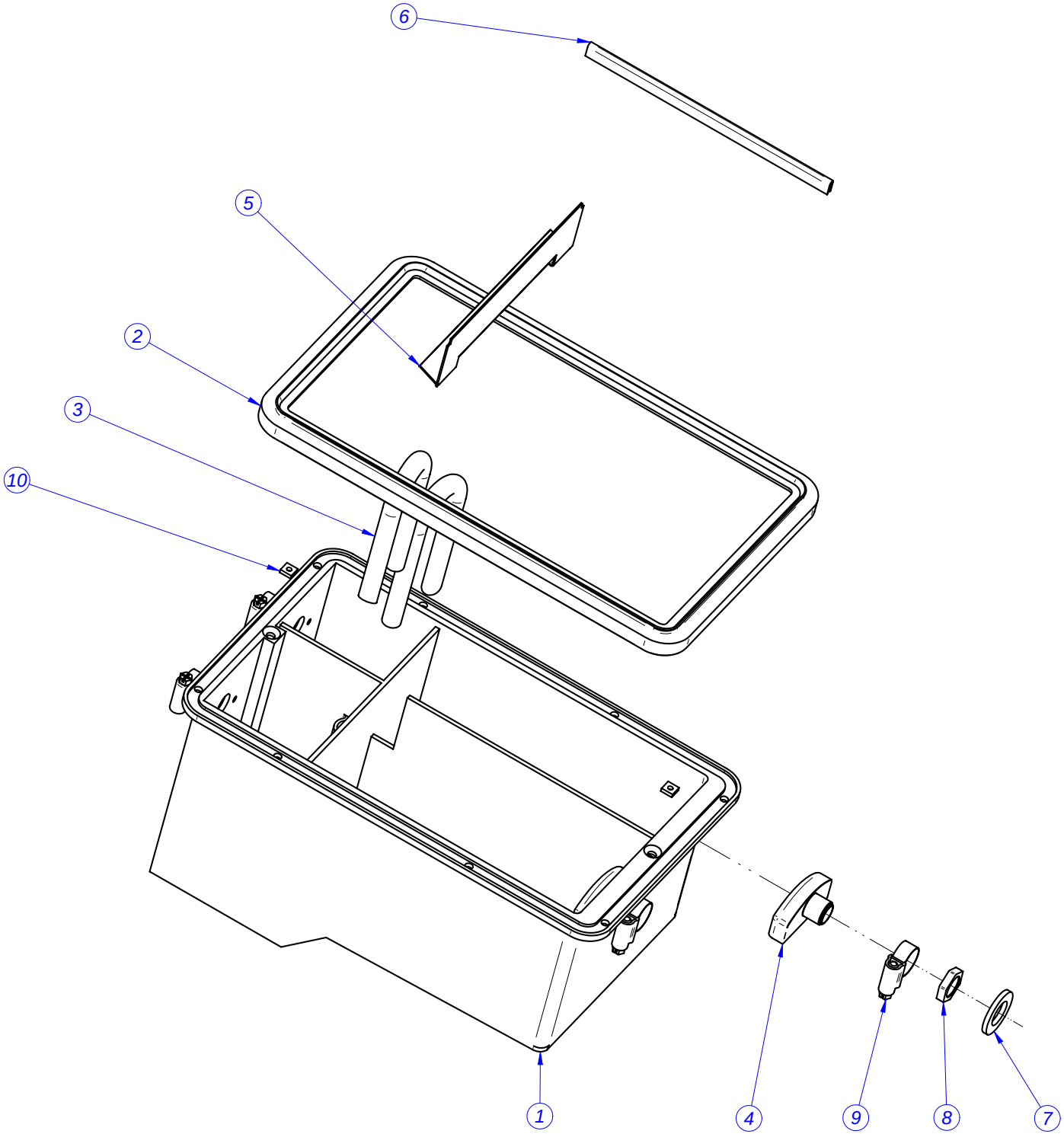
6
5
2
3
10
1
4
9
8
7

MOD.	LAVAVADORA / WASHING MACHINE	ZONA / ZONE	CUBETERA / DETERGENT TRAY	PLANO DIAGRAM	

ITEM	CODIGO CODE	DENOMINACION	DENOMINATION	LB-13M	LB-18M						
1	P440700000	CUBETA DE DETERGENTES	DETERGENT TRAY	1	1						
S/Nº	P640324000	SOPORTE CUBETERA	TRAY SUPPORT	1	1						INTRODUCIDO 01.09.09
2	P500702000	JUNTA CUBETA 1003431	TRAY JOINT 1003431	1	1						
3	P440702000	TUBO SIFON	SIPHON PIPE	2	2						
4	P440701000	DIFUSOR DE DETERGENTES	DETERGENT DISPERSER	2	2						
5	P440715000	ESCUADRA PROTECCION	BRACKET PROTECTION	1	1						
S/Nº	Q307002000	JUNTA DE GOMA 3031986	JOINT RUBBER 3031986	2	2						
6	P440721000	PERFIL REFUERZO	REINFORCEMENT PROFILE	1	1						
7	Q301302000	ARANDELA PLANA A17	FLAT WASHER A17	2	2						
8	Q223018000	TUERCA 16X1,5	NUT 16X1.5	2	2						
9	Q881305000	ABRAZADERA 25-40	CLAMP 25-40	4	4						
10	Q222004000	TUERCA CUADRADA M.4	SQUARE NUT M.4	2	2						

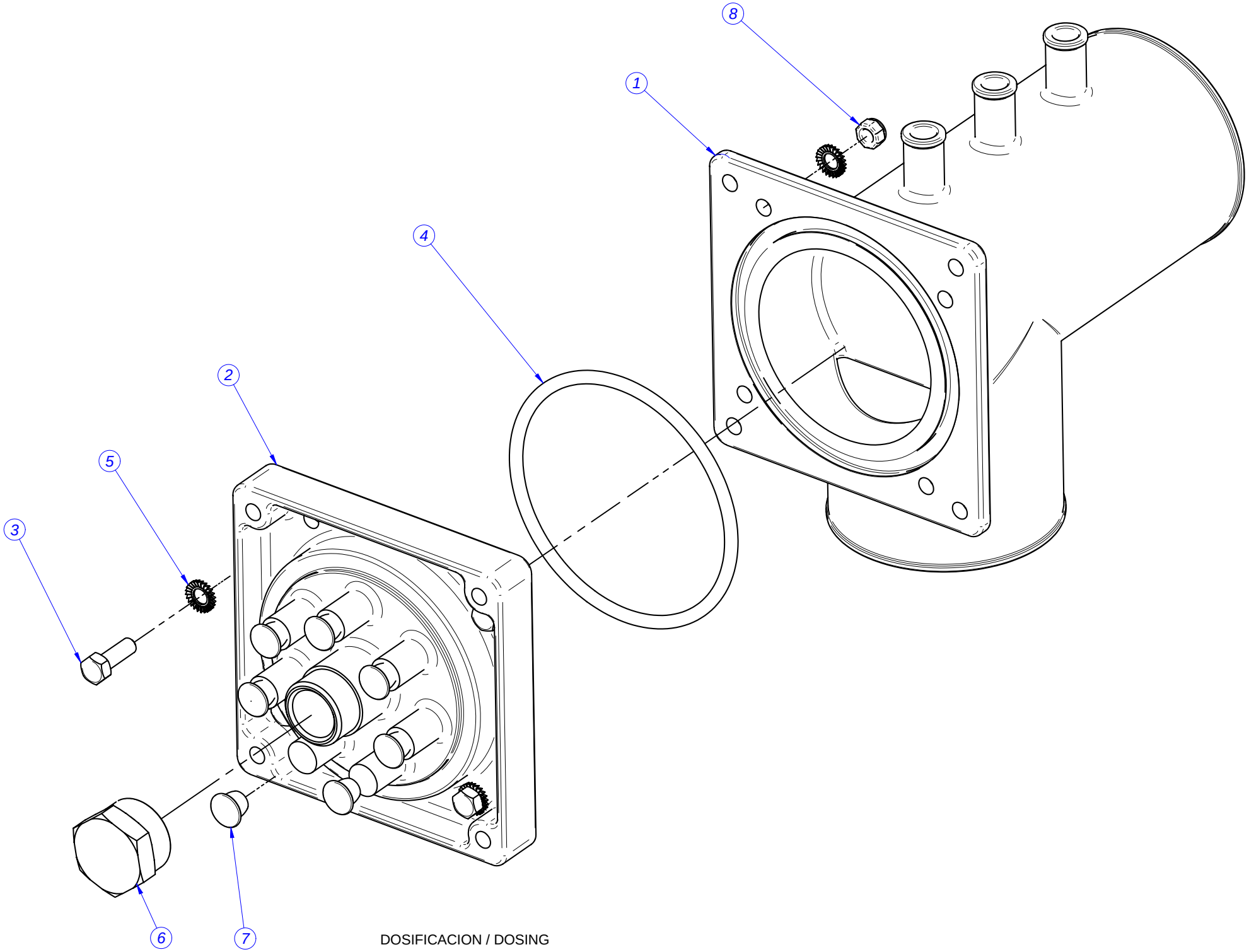

DOSIFICACION / DOSING

MOD.	LAVAVADORA / WASHING MACHINE	ZONA / ZONE	DOSIFICACION / DOSING	PLANO DIAGRAM	

ITEM	CODIGO CODE	DENOMINACION	DENOMINATION	LB-13M	LB-18M						
	P620707000	TOMA DOSIFICACION COMPLETA	COMPLETE DOSING INLET	1	1						
1	P620701000	TOMA DOSIFICACION INT. P	INN. DOSING INLET P	1	1						
2	P620706000	TOMA DOSIFICACION EXTERIOR	OUTER DOSING INLET	1	1						
3	Q012032000	TORN.EXA. M5X15 A.304	HEX BOLT M5X15 A.304	4	4						
4	Q307081000	JUNTA TÓRICA 75x4	"O" RING 75x4	1	1						
5	Q242030000	ARAND.ABAN. A5 A.304	WASHER A5 A.304	8	8						
6	P620710000	TAPA 1/2"	COVER 1/2"	1	1						
7	P620709000	TAPON DOSIFICADORES	DISPENSER PLUG	7	7						
8	Q222030000	TUER.AUTOB.M5	SELF-LOCK.NUT.M5	4	4						

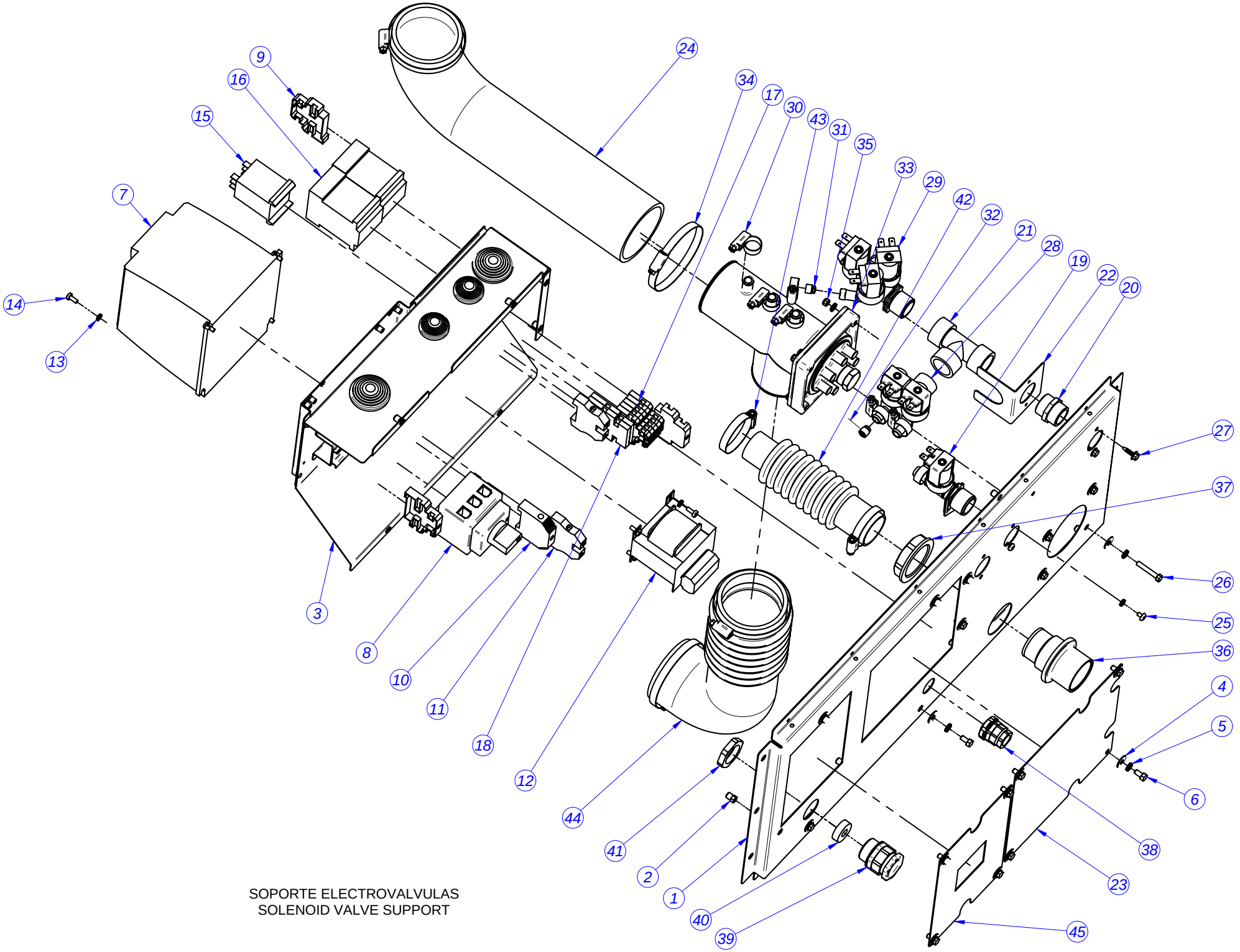
SOPORTE ELECTROVALVULAS
SOLENOID VALVE SUPPORT

MOD.	LAVAVADORA / WASHING MACHINE	ZONA / ZONE	SOPORTE ELECTROVALVULAS SOLENOID VALVE SUPPORT	PLANO DIAGRAM	

ITEM	CODIGO CODE	DENOMINACION	DENOMINATION	LB-13M E	LB-13M AC	LB-13M V	LB-18M E	LB-18M AC	LB-18M V		
1	P620331000	PANEL POSTERIOR TOMAS 13 V2	INLETS REAR PANEL 13 V2	1	1	1	1	1	1		
1	P630318000	PANEL POSTERIOR TOMAS 18 V2	INLETS REAR PANEL 18 V2	_	_	_	1	1	1		
2	Q221342000	REMACHE EXAGONAL M5	HEXAGONAL RIVET M5	14	14	14	14	14	14		
3	P620347000	PORTA CUADRO ALIMENTACION	SUPPLY PANEL HOLDER	1	1	1	1	1	1		
4	Q302022000	ARANDELA 16X6X1.2 A.304	WASHER 16X6X1.2 A.304	18	18	18	18	18	18		
5	Q242030000	ARAND.ABAN. A5 A.304	WASHER A5 A.304	22	22	22	22	22	22		
6	Q012031000	TORN.EXA. M5X10 A.304	HEX BOLT M5X10 A.304	14	14	14	14	14	14		
7	P623002000	VARIADOR 1.5 Kw	VARIATOR 1.5 Kw	1	1	1	_	_	_		ELIMINADO 03.09.07
7	P623027000	VARIADOR 13 PROGRAMADOR	VARIATOR 13 PROGRAMMER	1	1	1	_	_	_		INTRODUCIDO 03.09.07
7	P633003000	VARIADOR 2,2 Kw	VARIATOR 2,2 Kw	_	_	_	1	1	1		ELIMINADO 03.09.07
7	P633005000	VARIADOR 18 PROGRAMADO	VARIATOR 18 PROGRAMMER	_	_	_	1	1	1		INTRODUCIDO 03.09.07
8	P623003000	SECCIONADOR 32A	SECTION SWITCH 32A	1	1	1	1	1	1		ELIMINADO 22.11.10
8	P537038000	SECCIONADOR PRINCIPAL 25	MAIN SWITCH 25	1	1	1	1	1	1		INTRODUCIDO 22.11.10
9	Z263303000	TOPE FINAL	END STOP	3	3	3	3	3	3		
10	Z263302000	BORNA DE PASO AZUL	BLUE THROUGH TERMINAL	1	1	1	1	1	1		ELIMINADO 01.02.10
10	R673010000	BORNA DE PASO AZUL 35MM	BLUE THROUGH TERMINAL 35MM	1	1	1	1	1	1		INTRODUCIDO 01.02.10
11	P453026000	BORNE TIER 10 WPE-10103.O	TERMINAL TIER 10 WPE-10103.O	2	2	2	2	2	2		ELIMINADO 01.02.10
11	Z103035000	BORNE TIER 35MM	TERMINAL TIER 35MM	2	2	2	2	2	2		INTRODUCIDO 01.02.10
12	P623004000	TRANSFORMADOR 20020-024	TRANSFORMER 20020-024	1	1	1	1	1	1		ELIMINADO 01.07.08
12	P623028000	TRANSFORMADOR 0-20-0-230	TRANSFORMER 0-20-0-230	1	1	1	1	1	1		INTRODUCIDO 01.07.08
13	Q242020000	ARAND.ABAN. A.4 A304	WASHER A.4 A304	10	10	10	10	10	10		
14	Q032021000	TORN.ALOM.M4X10	CURVED SCREW M4X10	8	8	8	8	8	8		
15	Z203062000	RELE 230V. 16A 50-60 HZ	RELAY 230V. 16A 50-60 HZ	1	1	1	1	1	1		
16	Z203050000	CONTAC. SIRIUS 3R 230V.50-60	CONTACT. SIRIUS 3R 230V.50-60	2	_	2	2	_	2		
16	Z203050000	CONTAC. SIRIUS 3R 230V.50-60	CONTACT. SIRIUS 3R 230V.50-60	_	2	_	_	2	_		ELIMINADO 03.11.11
16	Z743009000	CONT. 230V AC 50/60Hz 20A 4via UL	CONTACT. 230V AC 50/60Hz 20A	_	1	_	_	1	_		INTRODUCIDO 03.11.11
16	Z953046000	CONTACTOR AUXILIAR 250V 10A UL	AUXIL. CONT. 250V 10A UL	_	1	_	_	1	_		ELIMINADO 03.11.11
17	P623006000	REGLETA BORNAJE 2 PISOS	TERMINAL STRIP 2 PISOS	5	5	5	5	5	5		
18	R073005000	BORNAS PORTA FUSIBLES	FUSE HOLDER TERMINALS	2	2	2	2	2	2		
19	Z701135000	E.V.SIMP.220V COD.255.208	SIMP.SV 220V COD.255.208	1	1	1	1	1	1		
20	Z102301000	MANGUITO 3/4"	HOSE 3/4"	1	1	1	1	1	1		

MOD.	LAVAVADORA / WASHING MACHINE	ZONA / ZONE	SOPORTE ELECTROVALVULAS SOLENOID VALVE SUPPORT	PLANO DIAGRAM	

ITEM	CODIGO CODE	DENOMINACION	DENOMINATION	LB-13M E	LB-13M AC	LB-13M V	LB-18M E	LB-18M AC	LB-18M V		
21	P535020000	TE 90º-3/4"	TE 90º-3/4"	1	1	1	1	1	1		
22	P535003000	TOPE ELECTROVALVULA	SOLENOID VALVE STOP	1	1	1	1	1	1		
23	P620342000	TAPA POSTERIOR V2	REAR COVER V2	1	1	1	1	1	1		
24	P620705000	CONDUCTO CUBETA-DOSIF. 13	DISPENSER TRAY PIPE 13	1	1	1	1	1	1		
24	P630704000	CONDUCTO CUBETA-DOSIF. 18	DISPENSER TRAY PIPE 18	_	_	_	1	1	1		
25	Q151320000	TOR.ALO.M4X6 H.ZINCADO	CURVED SCREW.M4X6 H.ZINC	2	2	2	2	2	2		
26	Q011353000	TORNILLO EXAGONAL M5X30	HEXAGONAL SCREW M5X30	4	4	4	4	4	4		
27	Q151323000	TORN.BROCA 4,8X16	SCREW BIT 4.8X16	2	2	2	2	2	2		
28	P255001000	ELECTROVALVULA DOBLE	DOUBLE SOLENOID VALVE	1	1	1	1	1	1		
29	Z611123000	ELECTROVALVULA TRIPLE 255.641	TRIPLE SOLENOID.255.641	1	1	1	1	1	1		
30	Q881302000	ABRAZADERA 12-20	CLAMP 12-20	9	9	9	9	9	9		
31	P443042000	REGULADOR 3L NE.254.023	REGULATOR 3L NE.254,023	1	1	1	1	1	1		
32	P443042000	REGULADOR 3L NE.254.023	REGULATOR 3L NE.254,023	1	1	1	1	1	1		
33	P620707000	TOMA DOSIFICACIÓN COMPLETA	COMPLETE DOSING INLET	1	1	1	1	1	1		
34	Q881326000	ABRAZADERA 70-90	CLAMP 70-90	4	4	4	4	4	4		
35	Q222030000	TUER.AUTOB.M5	SELF-LOCK.NUT.M5	4	4	4	4	4	4		
36	Z740701000	PASAMUROS ARBOL LAVADO	WASHING SHAFT WALL BUSHING	1	1	1	1	1	1		
37	Z710708000	TUERCA PASAMUROS	WALL BUSHING NUT	1	1	1	1	1	1		
38	R073004000	PRENSA ESTOPAS	STUFFING BOX	1	1	1	1	1	1		
39	R023013000	PRENSA ESTOPAS PG-21	STUFFING BOX PG-21	1	1	1	1	1	1		
40	R023026000	JUNTA GOMA (GAES)	RUBBER SEAL (GAES)	1	1	1	1	1	1		
41	Q223016000	TUERCA ROSCA Pg 21	SCREW THREAD Pg 21	1	1	1	1	1	1		
42	P620708000	CONDUCTO SALIDA VAPOR	STEAM OUTLET PIPE	1	1	1	1	1	1		
43	Q881306000	ABRAZADERA 32-50L	CLAMP 32-50L	2	2	2	2	2	2		
44	P620702000	CONDUCTO DOSIFICAD. CUBA 13	TUB DISPENSER PIPE 13	1	1	1	_	_	_		
44	P630701000	CONDUCTO DOSIFICAD. CUBA 18	TUB DISPENSER PIPE 18	_	_	_	1	1	1		
45	P620341000	TAPA SECCIONADOR V2	CIRCUIT BREAKER COVER V2	1	1	1	1	1	1		
S/Nº	P643005000	PTC+PUENTE RECTIFICADOR EL.	PTC+BRIDGE RECTIFIER ELT.	1	1	1	1	1	1		

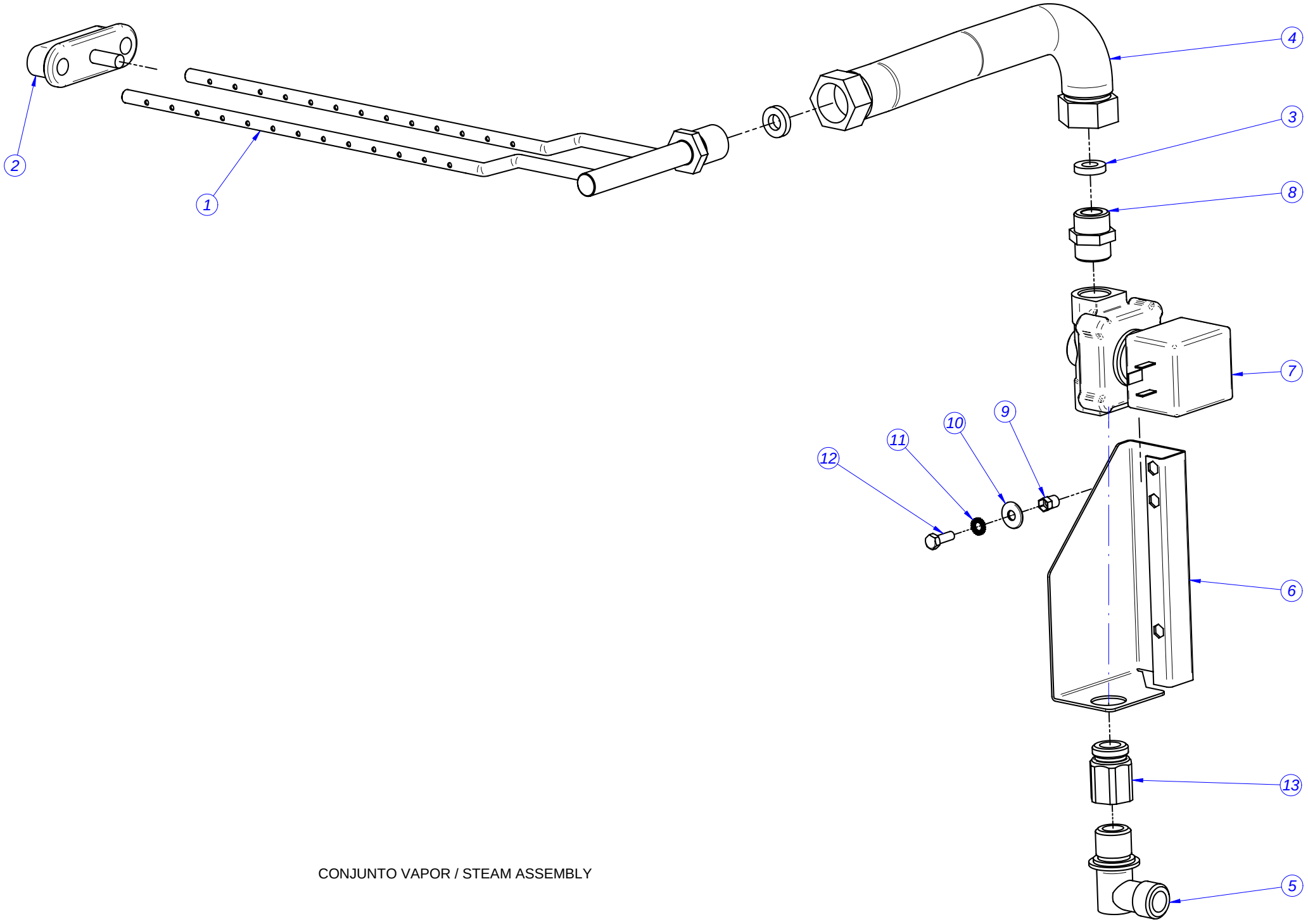

CONJUNTO VAPOR / STEAM ASSEMBLY

MOD.	LAVAVADORA / WASHING MACHINE	ZONA / ZONE	CONJUNTO VAPOR / STEAM ASSEMBLY	PLANO DIAGRAM	

ITEM	CODIGO CODE	DENOMINACION	DENOMINATION	LB-13M	LB-18M						
1	P615001000	INYECTOR VAPOR 10,13,18	STEAM JET 10,13,18	1	1						
2	P445011000	CIERRE COMPLETO	COMPLETE LOCK	1	1						
3	P615002000	ARANDELA VAPOR 10, 13, 18	STEAM WASHER 10,13,18	2	2						
4	P525005000	LATIGUILLO VAP.LF-14	STEAM WIRE VAP.LF-14	1	1						
5	S115013000	CODO LATON	BRASS ELBOW	1	1						
6	P620327000	SOPORTE VALVULA DE VAPOR	STEAM VALVE BRACKET	1	1						
7	P615003000	VALVULA VAPOR 1/2" 50/60 HZ	STEAM VALVE 1/2" 50/60 Hz	1	1						
8	S205023000	MANGUITO DOBLE 1/2	DOUBLE SLEEVE 1/2	1	1						
9	Q221342000	REMACHE EXAGONAL M5	HEXAGONAL RIVET M5	1	1						
10	Q302022000	ARANDELA 16X6X1.2 A.304	WASHER 16X6X1.2 A.304	1	1						
11	Q242030000	ARAND.ABAN. A5 A.304	WASHER A5 A.304	1	1						
12	Q012032000	TORN.EXA. M5X15 A.304	HEX BOLT M5X15 A.304	1	1						
13	X162101000	RACOR 1-2	CONNECTION 1-2	1	1						

MOD.	LAVAVADORA / WASHING MACHINE	ZONA / ZONE	CABLEADOS / WIRING	PLANO DIAGRAM	

ITEM	CODIGO CODE	DENOMINACION	DENOMINATION	LB-13M E	LB-13M AC	LB-13M V	LB-13MA E	LB-13MA AC			
	P623007000	INSTALACION ELECTR. L 8,13,18	ELEC. INSTALL. L 8,13,18	1	1	1	1	1			
	P623008000	CABLEADO RESISTENCIAS L-8,13	RESISTOR WIRING L-8,13	1	_	_	1	_			
	P623026000	CABLEADO TECLADO-SIMPLE	WIRED KEYBOARD-SIMPLE	1	1	1	1	1			
	P643003000	CABLEADO RESISTENCIAS LAV 25K	RESISTOR WIRING LAV 25KG	_	_	_	1	_			
	P643005000	PTC+PUENTE RECTIFICADOR EL.	PTC+BRIDGE RECTIFIER ELT.	1	1	1	1	1			
	P623044000	CABLEADO LEDS	LED WIRING	1	1	1	1	1			
	P643018000	CABLE DE VENTILADOR	FAN WIRING	_	_	_	1	_			
	P627019000	CABLEADO INTERRUPTOR GENER.	SWITCH GENERAL WIRING	1	1	1	1	1			
	P613016000	CABLEADO ELECTR.VALV.VAPOR	STEAM SOLENOID WIRING	_	_	1	_	_			
	P613015000	CABLEADO AGUA-CALIENTE 8/13/18	HOT WATER WIRING 8/13/18	_	1	_	_	1			
	P623029000	CABLEADO ARRASTRE-AC	TRAILING WIRING-AC	_	1	_	_	1			
	P623025000	CABLE. CONECTOR-PUENTE-ALIM	CONNECT.-BRIDGE-ALIM WIRING	_	_	_	1	1			

MOD.	LAVAVADORA / WASHING MACHINE	ZONA / ZONE	CABLEADOS / WIRING	PLANO DIAGRAM	

ITEM	CODIGO CODE	DENOMINACION	DENOMINATION	LB-18M E	LB-18M AC	LB-18M V	LB-18MA E	LB-18MA AC			
	P623007000	INSTALACION ELECTR. L 8,13,18	ELEC. INSTALL. L 8,13,18	1	1	1	1	1			
	P623008000	CABLEADO RESISTENCIAS L-8,13	RESISTOR WIRING L-8,13	1	_	_	1	_			
	P643027000	CABLEADO RESISTENCIAS AF 25KG	RESISTOR WIRING AF 25KG	_	_	_	_	_			
	P623026000	CABLEADO TECLADO-SIMPLE	WIRED KEYBOARD-SIMPLE	1	1	1	1	1			
	P643003000	CABLEADO RESISTENCIAS LAV 25K	RESISTOR WIRING LAV 25KG	_	_	_	_	_			
	P643005000	PTC+PUENTE RECTIFICADOR EL.	PTC+BRIDGE RECTIFIER ELT.	1	1	1	1	1			
	P623044000	CABLEADO LEDS	LED WIRING	1	1	1	1	1			
	P643018000	CABLE DE VENTILADOR	FAN WIRING	_	_	_	_	_			
	P627019000	CABLEADO INTERRUPTOR GENER.	SWITCH GENERAL WIRING	1	1	1	1	1			
	P613016000	CABLEADO ELECTR.VALV.VAPOR	STEAM SOLENOID WIRING	_	_	1	_	_			
	P613015000	CABLEADO AGUA-CALIENTE 8/13/18	HOT WATER WIRING 8/13/18	_	1	_	_	1			
	P623029000	CABLEADO ARRASTRE-AC	TRAILING WIRING-AC	_	1	_	_	1			
	P623025000	CABLE. CONECTOR-PUENTE-ALIM	CONNECT.-BRIDGE-ALIM WIRING	_	_	_	1	1			
	P623019000	CABLE. TRANSFORM. SIN NEUTRO	NO NEUTRAL TRANSFO. WIRING	1	_	_	_	_			LB-13 M E 400V 3-SN

Instalaciones	Referencia	LAV-10	LAV-13	LAV-18	Notas
Placa reles M	P-613019000	X	X	X	
Circuito teclado display	P-613018000	X	X	X	
Indicador de componentes Lav	P-623011000	X	X	X	
Interruptor general C.I.	P-623017000	X	X	X	
Leyenda Lav	P-623014000	X	X	X	
Componentes	**Reference**	**LAV-10**	**LAV-13**	**LAV-18**	
Borne doble piso 2,5mm Weidmuller DK 4/35 5276.6	P-623006000	7	7	7	
Borne Azul 10mm	Z-263302000	1	1	1	
Borne Portafusible	R-073005000	2	2	2	
Borne tierra 10mm	P-453026000	2	2	2	
Condensador antiparasitario 0,1 uF	Z-233012000	7	7	7	
Contactor 20A NA	Z-203050000	2	2	2	
Contactor 35 A	P-433030000				
Contactor 60 A	X-183011000				
Electrovalvula simple	Z-701135000	2	2	2	
Electrovalvula doble	P-255001000	X	X	X	
Electrovalvula Triple	Z-611123000	X	X	X	
Electrovalvula simple 120 L/h Z-102305	Z-102323000				
Electroiman Biestable	P-613002000	X	X	X	
Fusible 4A	P-184011000	2	2	2	
Interuptor magnetico desequilibrio NA	Z-100522000	X	X	X	
Monedero	P-613004000	X	X	X	
Motor 10	P-615904000	X			
Motor 13	P-625905000		X		
Motor 18	P-635906000			X	
PG-21 Prensaestopas	R-023013000	X	X	X	
PG21 Tuerca	Q-223016000	X	X	X	
PG21 Junta de goma					
PG36 Junta de goma					
PG36 Prensaestopas	R-143010000				
PG36 Tuerca					
Regleta 2,5 mm^2 TEKOX1106PL D.int = 3,2mm	R-693010000	2/12	2/12	2/12	
Regleta 6 mm^2 1/12 D.int = 4,1mm	Z-713035000				
Regleta 16 mm^2 1/6 Elettro Gibi D.int = 5,5mm	Z-743006000				
Rele 16 A 2NA 230V 50/60Hz Faston FINDER	Z-203062000	X	X	X	
Resistencia 2KW 8KG	P-613008000	3			
Resistencia 3KW 13KG	P-623005000		3		
Resistencia 4KW 18KG	P-633002000			3	
Resistencia 6KW	P-533001000				
Señalizacion R,S,T,N,PE	Z-683068000	X	X	X	
Seccionador 8KG 32A 11,5kw Siemens 3LD22 30-OTK13	P-623003000	X			
Seccionador 13,18,25KG 63 A 22 kw Siemens 3LD25 30-OTK13	P-537038000		X	X	
Seccionador 125 A 45 Kw Siemens 3LD28 30-OTK13	P-543039000				
Sonda NTC + Limitador	P-503025000	X	X	X	
Terminal mini Mate-n-lok Hembra 170362-1	P-623016000				
Tope final 10mm	Z-263303000	X	X	X	
Tapa Cubierta conector Sub-D	P-613014000	X	X	X	
Transformador 230/20-0-20 24-0	P-623004000	X	X	X	
Variador 10Kg	P-613007000	X			
Variador 13Kg	P-623002000		X		
Variador 18Kg	P-633003000			X	
Valvula de vaciado 8, 13, 18 Kg	P-302120000	X	X	X	
Cableado LEDS	P-623044000	X	X	X	Introducido 01.09.10

Installations	Reference	LAV-10	LAV-13	LAV-18	Notes
Relay plate M	P-613019000	X	X	X	
Keyboard display circuit	P-613018000	X	X	X	
Wash components display	P-623011000	X	X	X	
C.I. Power switch	P-623017000	X	X	X	
Wash legend	P-623014000	X	X	X	
Components	**Reference**	**LAV-10**	**LAV-13**	**LAV-18**	
Double floor terminal 2.5 mm Weidmuller DK 4/35 5276.6	P-623006000	7	7	7	
Blue terminal 10 mm	Z-263302000	1	1	1	
Fuse holder terminal	R-073005000	2	2	2	
Earth terminal 10 mm	P-453026000	2	2	2	
Antiparasitic condenser 0.1 uF	Z-233012000	7	7	7	
Contactor 20A NA	Z-203050000	2	2	2	
Contactor 35 A	P-433030000				
Contactor 60 A	X-183011000				
Simple solenoid valve	Z-701135000	2	2	2	
Double solenoid valve	P-255001000	X	X	X	
Triple solenoid valve	Z-611123000	X	X	X	
Simple solenoid valve 120 L/h Z-102305	Z-102323000				
Bistable electromagnet	P-613002000	X	X	X	
4A fuse	P-184011000	2	2	2	
Imbalance magnetic switch NA	Z-100522000	X	X	X	
Coin slot.	P-613004000	X	X	X	
Motor 10	P-615904000	X			
Motor 13	P-625905000		X		
Motor 18	P-635906000			X	
PG-21 Packing glands	R-023013000	X	X	X	
PG21 Nut	Q-223016000	X	X	X	
PG21 Rubber seal					
PG36 Rubber seal					
PG36 Packing gland	R-143010000				
PG36 Nut					
Terminal strip 2.5 mm^2 TEKOX1106PL Int. diam. = 3.2 mm	R-693010000	2/12	2/12	2/12	
Terminal strip 6 mm^2 1/12 Int. diam. = 4.1 mm	Z-713035000				
Terminal strip 16 mm^2 1/6 Elettro Gibi Int. Diam. = 5.5 mm	Z-743006000				
Relay 16 A 2NA 230V 50/60Hz Faston FINDER	Z-203062000	X	X	X	
Resistance 2KW 8KG	P-613008000	3			
Resistance 3KW 13KG	P-623005000		3		
Resistance 4KW 18KG	P-633002000			3	
Resistance 6KW	P-533001000				
R,S,T,N,PE indication	Z-683068000	X	X	X	
Circuit Breaker 8KG 32A 11.5kw Siemens 3LD22 30-OTK13	P-623003000	X			
Circuit Breaker 13,18,25 KG 63 A 22 kw Siemens 3LD25 30-OTK13	P-537038000		X	X	
Circuit Breaker 125 A 45 Kw Siemens 3LD28 30-OTK13	P-543039000				
NTC probe + Limiter	P-503025000	X	X	X	
Mini terminal Mate-n-lok female socket 170362-1	P-623016000				
End buffer 10 mm	Z-263303000	X	X	X	
Cover lid connector Sub-D	P-613014000	X	X	X	
Transformer 230/20-0-20 24-0	P-623004000	X	X	X	
Variator 10 Kg	P-613007000	X			
Variator 13 Kg	P-623002000		X		
Variator 18 Kg	P-633003000			X	
Drainage valve 8, 13, 18 Kg	P-302120000	X	X	X	
LED wiring	P-623044000	X	X	X	Introduced 01.09.10

LAVAD/E - 10,13,18 MPP, M

LAVAD/V - 10,13,18 MPP, M

LAVAD/AC - 10,13,18 MPP, M

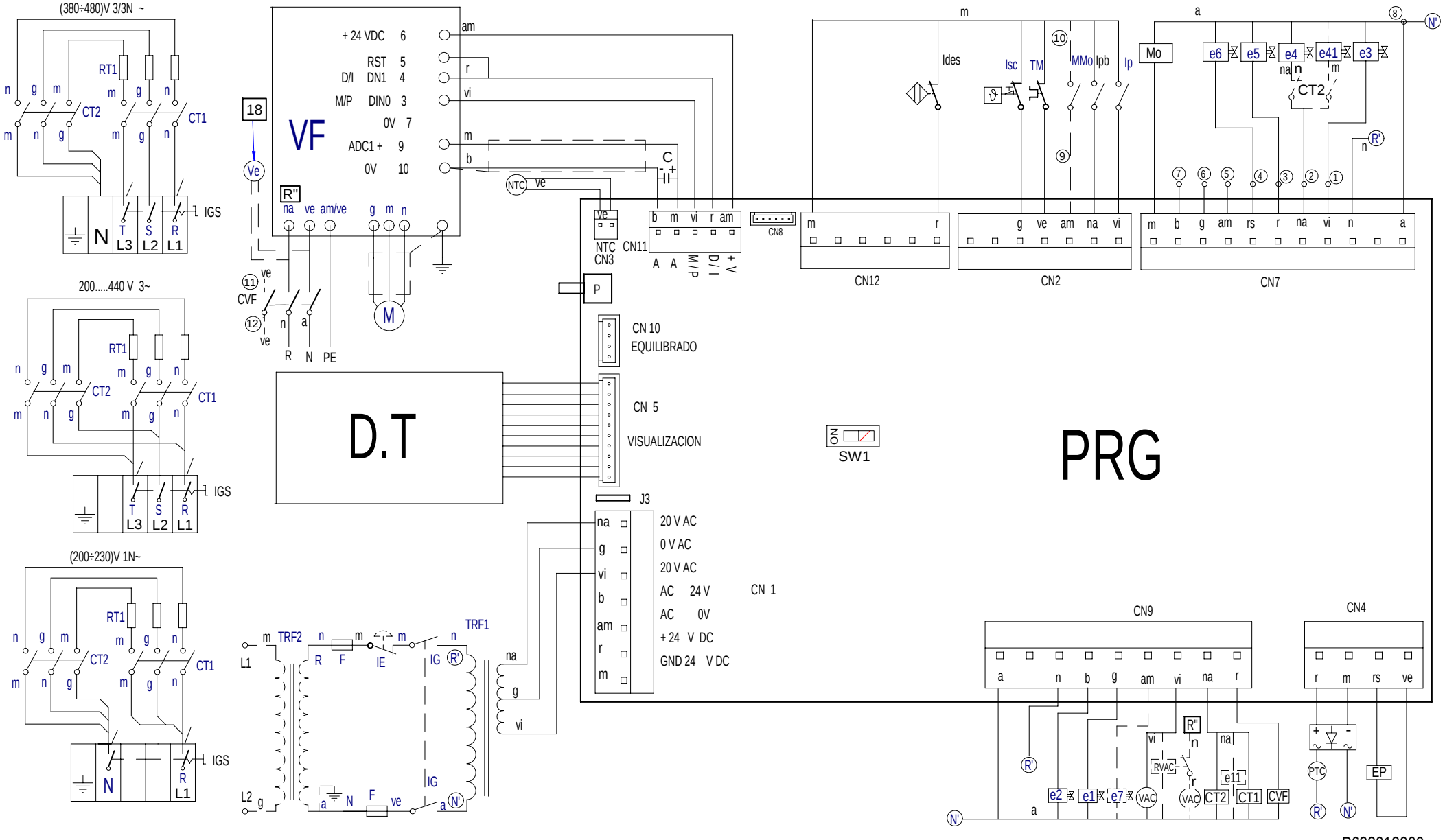

P623013000

Simb / LENG	ESPAÑOL	FRANÇAIS	ENGLISH	DEUTSCH	ITALIANO
CT =	Contactor Calentamiento	Contacteur Chauffe	Heating Contactor	Heizschütz	Contatore Riscaldamento
DP =	Detector posición.	Détecteur position	Position detector	Stellung Taster	Rilevatore posizione
DS1	Dosificador Neutralizante.	Doseur Neutralisant	Neutralizer feeder	Dosiervorrichtung Neutralspülmittel	Dosatore Neutralizzante
DS2	Dosificador jabon liquido.	Doseur lessive liquide	Liquid soap feeder	Dosiervorrichtung Flüssigseife	Dosatore sapone liquido
DS3	Dosificador aditivos.	Doseur additifs	Additive feeder	Dosiervorrichtung Zusatzmittel	Dosatore additivi
D.T.	Display/Teclado	Écran/Clavier	Display/Keyboard	Display/Tastatur	Display/Tastiera
e1 =	Electro válvula agua Fria.	Électrovanne eau Froide	Cold water electrically operated valve	Elektroventil Kaltwasser	Elettrovalvola acqua Fredda
e2 =	Electro válvula agua Caliente	Électrovanne eau Chaude	Hot water electrically operated valve	Elektroventil Warmwasser	Elettrovalvola acqua Calda
e3 =	Electro válvula Prelavado.	Électrovanne Prélavage	Pre-wash electrically operated valve	Elektroventil Vorwaschen	Elettrovalvola Prelavaggio
e4 =	Electro válvula Lavado.	Électrovanne Lavage	Wash electrically operated valve	Elektroventil Hauptwaschgang	Elettrovalvola Lavaggio
e5 =	Electro válvula Lejía.	Électrovanne Eau de Javel	Bleach electrically operated valve.	Elektroventil Bleiche	Elettrovalvola Candeggina
e6 =	Electro válvula Suavizante.	Électrovanne Assouplissant	Fabric softener electrically operated valve	Elektroventil Weichspüler	Elettrovalvola Ammorbidente
e7 =	Electro válvula agua Descalcificada	Électrovanne eau Adoucie	Delimed water electrically operated valve	Elektroventil entkalktes Wasser	Elettrovalvola acqua Decalcificata
e8 ,9,10 =	Electro válvula Equilibrado	Électrovanne Équilibrage	Balancer electrically operated valve	Elektroventil Gleichgewicht	Elettrovalvola Bilanciamento
e11 =	Electro válvula Vapor.	Électrovanne Vapeur	Steam electrically operated valve	Elektroventil Dampf	Equilibrado Vapore
EP =	Electroimán de Puerta.	Électro-aimant de Porte	Door electric magnet	Elektromagnet Gerätetür	Elettromagnete Porta
FI =	Filtro de Interferencias.	Filtre Anti-parasites	Interference filter	Störungsfilter	Filtro Interferenze
F =	Fusible.	Fusible	Fuse	Sicherung	Fusibile
G1,G2 =	Galga Sensor.	Jauge Capteur	Sensing gage	Meßsensor	Calibro Sensore
IE =	Pulsador Parada de emergencia.	Bouton-poussoir Arrêt d'urgence	Emergency stop push button	Not-Aus-Taster	Pulsante Arresto di emergenza
IG =	Interruptor general.	Interrupteur général	General switch	Hauptschalter	Interruttore generale
IGS =	Interruptor General de seguridad.	interrupteur Général de sécurité	General safety switch	Sicherheitshauptschalter	Interruttore Generale di sicurezza
Ides =	Interruptor de desequilibrio.	Interrupteur de balourd	Unbalance switch	Ungleichgewichtsschalter	Interruttore di squilibrio
IMo =	Interruptor Monedero.	Interrupteur Monnayeur	Coin slote switch	Münzschalter	Interruttore Portamonete
Ip =	Interruptor puerta Cerrada.	Interrupteur porte Fermée	Closed door switch	Schalter Tür geschlossen	Interruttore porta Chiusa
Ipb =	Interruptor puerta bloqueada.	Interrupteur porte verrouillée	Door lock switch	Schalter Tür verriegelt	Interruttore porta bloccata
Isc	Interruptor seguridad Temperatura	Thermostat Limiteur	Hi-limit Thermostat	Grenzthermostat	Termostato Limitatore
M =	Motor.	Moteur	Motor	Motor	Motore
Mo =	Monedero.	Monnayeur	Coin slot	Münzvorrichtung	Portamonete
NTC =	Sensor temperatura..	Capteur température	Temperature sensor	Temperatursensor	Sensore temperatura
RT =	Resistencia Calentamiento.	Résistance Chauffe	Heating Resistors	Widerstand Aufheizung	Resistenza Riscaldamento
Tm =	Térmico de Motor.	Thermique du Moteur	Motor hot-wire	Motorwärmeschalter	Termico del Motore
Trf =	Transformador	Transformateur	Transformer	Transformator	Trasformatore
Trf s/N =	Transformador Versión sin Neutro.	Transformateur Version sans Neutre	Transformer Version without Neutral	Transformator Modell ohne Neutralstellung	Trasformatore Versione senza Neutro
VAC =	Válvula Vaciado	Vanne Vidange	Emptying valve	Ablassventil	Valvola Scarico
Ve =	Ventilador.	Ventilateur	Fan	Ventilator	Ventola
VF =	Convertidor de Frecuencia.	Convertisseur de Fréquence	Frequency converter	Frequenzumwandler	Convertitore di Frequenza
VM =	Ventilador Motor.	Ventilateur Moteur	Fan motor	Ventilator Motor	Ventola Motore
1...8 =	Puntos conexión dosificadores.	Points raccordement doseurs	Feeder connection points	Anschlussstellen Dosiervorrichtungen	Punti connessione dosatori
COLOR	**COLORES**	**COULEURS**	**COLOUR**	**FARBEN**	**COLORE**
a =	Azul	Bleu	Blue	Blau	Blu
am =	Amarillo	Jaune	Yellow	Gelb	Giallo
am/ve =	Amarillo/verde	Jaune / vert	Yellow / green	Gelb/grün	Giallo/verde
b =	Blanco	Blanc	White	Weiß	Bianco
g =	Gris	Gris	Grey	Grau	Grigio
m =	Marrón	Marron	Brown	Braun	Marrone
n =	Negro	Noir	Black	Schwarz	Nero
na =	Naranja	Orange	Orange	Orange	Arancio
r =	Rojo	Rouge	Red	Rot	Rosso
rs =	Rosa	Rose	Pink	Rosa	Roseo
ve =	Verde	Vert	Green	Grün	Verde
vi =	Violeta	Violet	Purple	Violett	Viola