FAGOR INDUSTRIAL

DESPIECE TÉCNICO
TECHNICAL PARTS

Lavavajillas
Dishwasher

MODELOS
CO-500 / DD / B / B DD
CO-501 / DD / B / B DD

Diciembre 2014 December
Revisado Enero 2017 January Revised



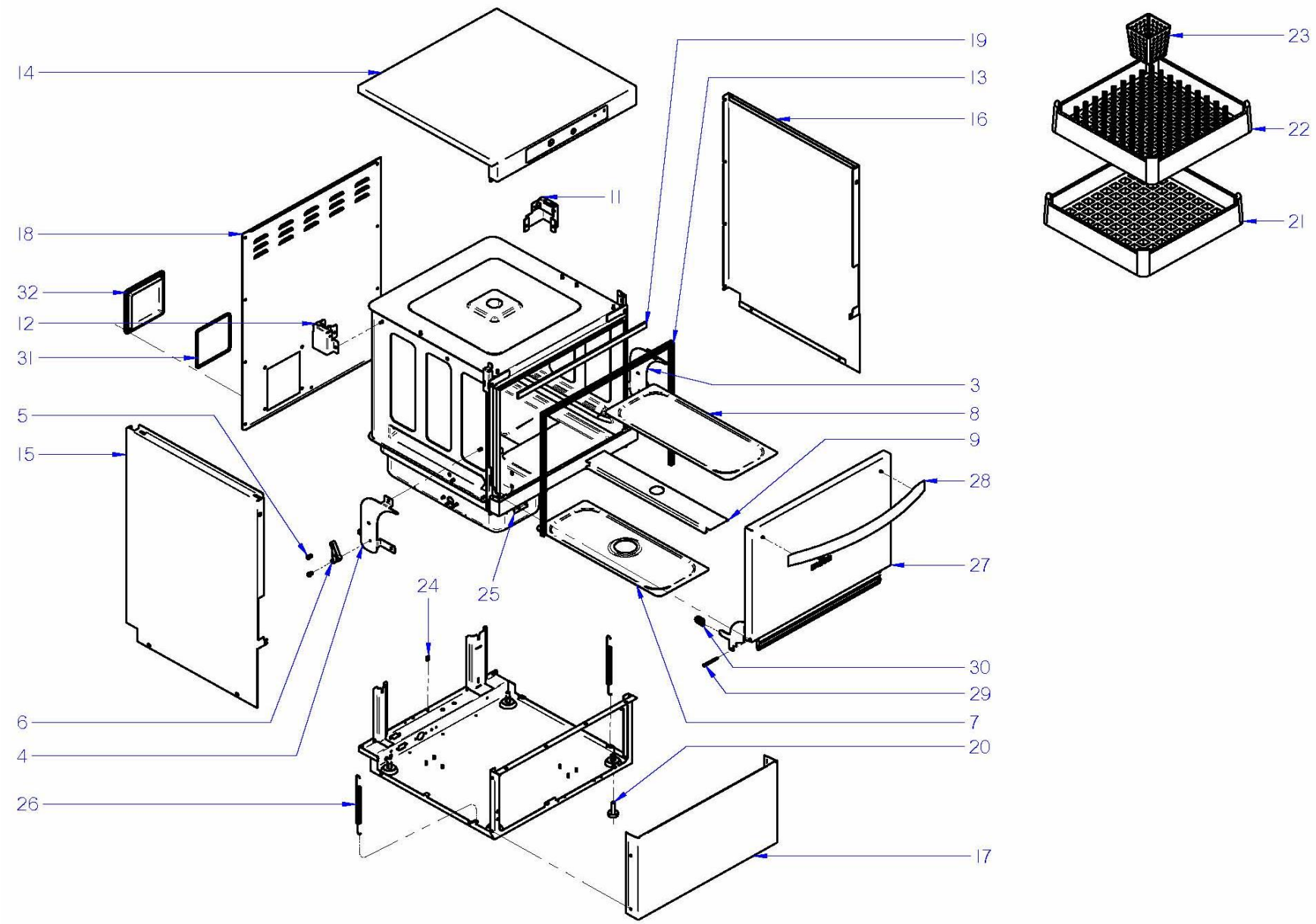

Drawing Nr.	Signature	Date	MUEBLE / CABINET	Sheet
C-3286	Iban R.	nov-15	CO-500-501	1

FAGOR

ZONA / ZONE	ARMAZON / FRAME	LÁMINA / DRAWING	C-3286	FAGOR

ITEM	REFERENCIA REFERENCE	DENOMINACIÓN	DENOMINATION	CO-501	CO-500						RECOMMENDED	ELIMINADO ELIMINATED	INTRODUCIDO INTRODUCED	NOTAS / NOTES
3	12043455	SOPORTE RESORTE PUERTA DCHA	DOOR SPRING RIGHT SUPPORT	1	1									
4	12043457	SOPORTE RESORTE PUERTA IZDA	DOOR SPRING LEFT SUPPORT	1	1									
5	12043554	EJE RESORTE	SPRING SHAFT	4	4									
6	12043429	RESORTE PUERTA	DOOR SPRING	2	2									
7	12109967	BANDEJA FILTRO ALIVIADERO	SPILLWAY FILTER TRAY	1	_									
7	12152952	BAMDEJA FILTRO CO-500 COMPLETA	CO-500 COMPLETE FILTER TRAY	_	1									
8	12109964	BANDEJA CONCEPT LISA (DCHA.)	CONCEPT FLAT TRAY (RIGHT)	1	_									
9	12098244	SOPORTE CENTRAL BANDEJAS	CENTRAL TRAYS SUPPORT	1	_									
11	12103774	SUJECIÓN PANEL LATERAL DCHO.	RIGHT SIDE PANEL FASTENING	1	1							13/06/2016		
11	12135515	SUJECIÓN PANEL LATERAL DCHO.	RIGHT SIDE PANEL FASTENING	1	1								13/06/2016	
12	12103787	SUJECIÓN PANEL LATERAL IZDO.	LEFT SIDE PANEL FASTENING	1	1							13/06/2016		
12	12135516	SUJECIÓN PANEL LATERAL IZDO.	LEFT SIDE PANEL FASTENING	1	1								13/06/2016	
13	12049352	BURLETE APERTURA FRONTAL	FRONT LOADING GASKET	1	1									
14	12103683	TAPA PORTAMANDOS CONCEPT	CONTROL PANEL COVER CONCEPT	1	1									
15	12122224	PANEL LATERAL IZDO	LEFT SIDE PANEL	1	1							13/06/2016		
15	12133785	PANEL LATERAL IZDO	LEFT SIDE PANEL	1	1								13/06/2016	
16	12122222	PANEL LATERAL DCHO	RIGHT SIDE PANEL	1	1							13/06/2016		
16	12133784	PANEL LATERAL DCHO	RIGHT SIDE PANEL	1	1								13/06/2016	
17	12122220	PANEL FRONTAL	FRONT PANEL	1	1									
18	12127604	PANEL POSTERIOR	REAR PANEL	1	_							13/06/2016		
18	12133825	PANEL POSTERIOR	REAR PANEL	1	_								13/06/2016	
18	12127604	PANEL POSTERIOR	REAR PANEL	_	1							07/03/2016		
18	12133350	PANEL POSTERIOR	REAR PANEL	_	1							13/06/2016	07/03/2016	SIN VENTANA/WITHOUT WINDOW
18	12138017	PANEL POSTERIOR	REAR PANEL	_	1								13/06/2016	
19	12111378	ESPUMA CIERRE TAPA PORTAMAND.	CTRL. P. COVER CLOSURE FOAM	1	1									
20	12024163	PATA REGULABLE	REGULABLE FEET	4	4									
21	12025011	CESTILLO BASE CT-10	CT-10 BASE BASKET	1	1									
22	12024990	CESTILLO PLATOS CP-16-18	CP-16-18 PLATES BASKET	1	1									
23	12023745	CESTILLO CUBIERTOS	CUTLERY BASKET	1	1									
24	12087215	TUERCA RÁPIDA M5 MIKALOR	MIKALOR QUICK NUT M5	19	19									
25	12044905	SOPORTE BULBO TERMOMETRO	THERMOSTAT BULB SUPPORT	1	1									
26	12097279	MUELLE APERTURA FRONTAL	FRONT LOADING SPRING	2	2									

ZONA / ZONE	ARMAZON / FRAME	LÁMINA / DRAWING	C-3286	FAGOR

ITEM	REFERENCIA REFERENCE	DENOMINACIÓN	DENOMINATION	CO-501	CO-500						RECOMMENDED	ELIMINADO ELIMINATED	INTRODUCIDO INTRODUCED	NOTAS / NOTES
27	12097227	PUERTA COMPLETA	COMPLETE DOOR	1	1									
28	12049466	ASA PUERTA	DOOR HANDLE	1	1									
29	12048418	TORN_ESPECIAL_EJE_PUERTA_M6	DOOR AXIS SPECIAL SCREW M-6	2	2									
30	12047927	TOPE BISAGRA	HINGE DOORSTOP	2	2									
31	12096947	JUNTA TAPA	COVER'S SEAL	1	1							07/03/2016		
31	12096947	JUNTA TAPA	COVER'S SEAL	1	_								08/03/2016	
32	12095220	TAPA PLASTICO CAJA CONEXIONES	CONNECTIONS BOX COVER	1	1							07/03/2016		
32	12095220	TAPA PLASTICO CAJA CONEXIONES	CONNECTIONS BOX COVER	1	_								08/03/2016	

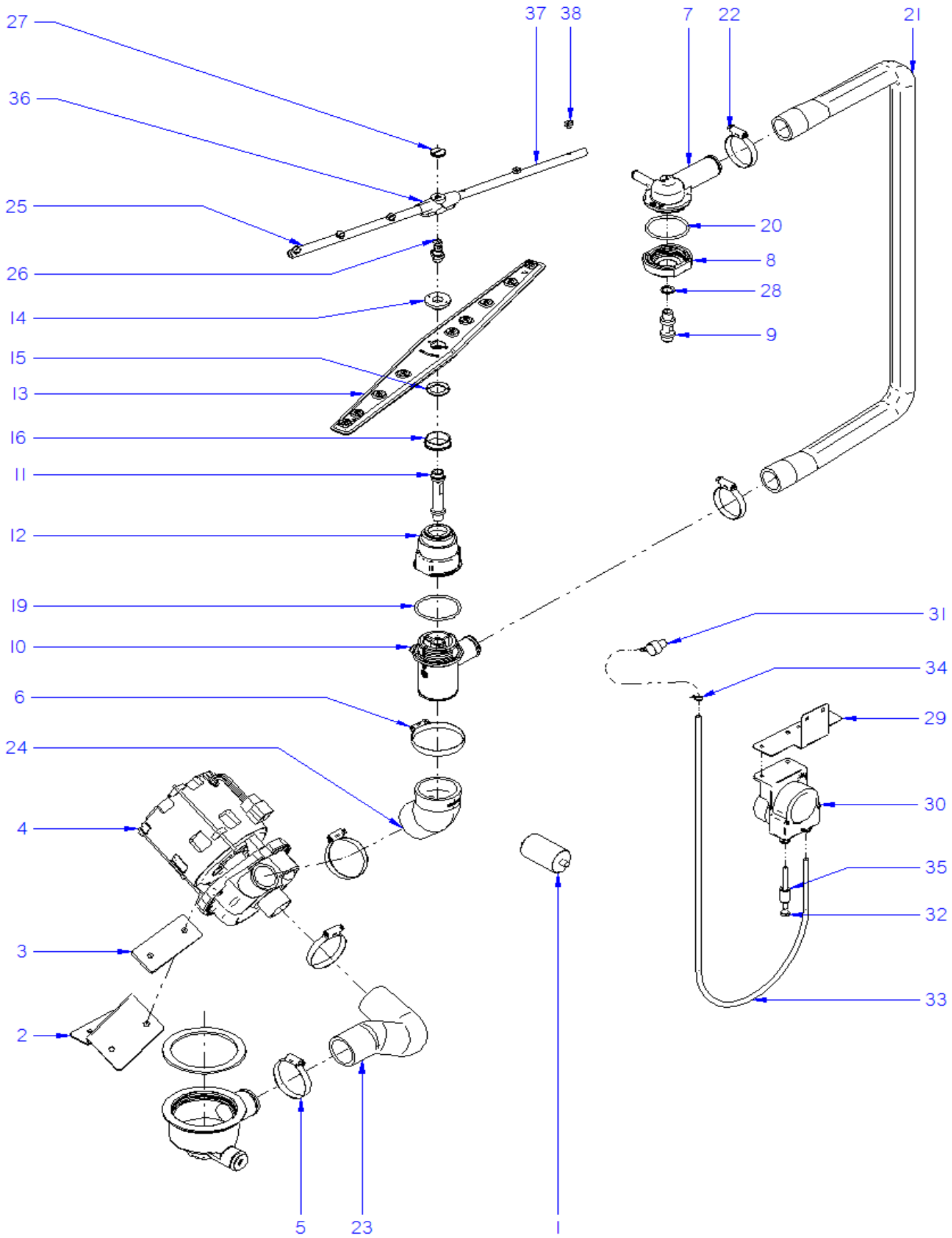

Drawing Nr.	Signature	Date	LAVADO / WASHING FUNCTIONAL PART	Sheet
C3287	Iban R.	nov-14	CO-500-501	2

FAGOR

ZONA / ZONE	PARTE FUNCIONAL LAVADO / WASHING FUNCTIONAL PART	LÁMINA / DRAWING	C-3287	FAGOR

ITEM	REFERENCIA REFERENCE	DENOMINACIÓN	DENOMINATION	CO-500-501	CO-500-501 DD						RECOMMENDED	ELIMINADO ELIMINATED	INTRODUCIDO INTRODUCED	NOTAS / NOTES
1	12024376	CONDENSADOR 10MF	10MF CAPACITOR	1	1						X			
2	12043784	SOPORTE BOMBA LAVADO	WASHIG PUMP SUPPORT	1	1									
3	12023556	BASE BOMBA LAVADO 1003016	WASHIG PUMP BASE 1003016	1	1									
4	12043287	MOTOBOMBA 590KW 50Hz	WASHIG PUMP 590KW 50Hz	1	1						X			
4	12102834	MOTOBOMBA 590KW 60Hz	WASHIG PUMP 590KW 60Hz	1	1						X			
5	12009962	ABRAZADERA 40-60	40-60 CLAMP	3	3									
6	12009933	ABRAZADERA 50-70L	50-70L CLAMP	1	1									
7	12041614	SOP. DISTRIBUIDOR SUPERIOR	UPPER SPRY-ARM SUPPORT	1	1									
8	12041531	AMARRE SOPORTE DISTR. SUPERIOR	UPPER DISTRIB. SUPPORT FASTENING	1	1									
9	12043289	EJE LAVADO FRONTAL	WASHING SHAFT FRONT LOADING	1	1									
10	12047863	SOP. DISTRIBUIDOR INFERIOR	LOWER SPRY-ARM SUPPORT	1	1									
11	12048535	EJE LAVADO AF CONCEPT	WASHING SHAFT FRONT LOADING	1	1									
12	12048042	AMARRE SOPORTE DISTR. INFERIOR	LOW. DISTRIB. SUPPORT FASTENING	1	1									
13	12025122	DISTRIBUIDOR MONTADO	COMPLETE DISTRIBUTOR	2	2									
14	12110631	ENGANCHE DISTRIBUIDOR LATON	LATON DISTRIBUTOR HOOK	2	2									
15	12024289	AMARRE ENGANCHE DISTRIBUI	DISTRIBUTOR HOOK FASTENING	2	2									
16	12041629	PROTECTOR FUGAS	LEAKAGE PROTECTOR	2	2									
19	12049052	JUNTA 53,57x3,53 SOP DISTRI INFE	O-RING Ø53,57 x 3,53 LOW. DISTRIB.	1	1									
20	12049055	JUNTA TORICA Ø50,39 x 3,53	O-RING Ø50,39 x 3,53	1	1									
21	12041930	ARBOL LAVADO	WASHING TREE	1	1									
22	12009986	ABRAZADERA 32-50L	32-50L CLAMP	2	2									
23	12103941	CODO ASPIRACION CONCEPT	SUCTION ELBOW ADVANCE	1	1									
24	12041926	CODO IMPULSION CONCEPT	EXPULSION ELBOW ADVANCE	1	1									
25	12113596	RAMA ACLARADO IZQ COMPLETA	COMPLETE LEFT RINSE BRANCH	2	2									
26	12113893	EJE ACLARADO CONCEPT EVO	RINSE SHAFT CONCEPT EVO	2	2									
27	12009829	TORNILLO ESPECIAL M.5X0.8	SPECIAL SCREW M.5X0.8	2	2									
28	12115944	CALZO EJE LAVADO	WASHING SHAFT SHIM	1	1									
29	12102040	SOPORT. DOSIFICADORES	DISPENSERS SUPPORT	_	1									
30	12024216	DOSIFIC. DGTE REGULABLE G300	REGUL. DETERG. DISPENSER G300	_	1						X			
31	12024531	INYECTOR DETERGENTE INOX	DETERGENT INJECTOR	_	1									
32	12024139	CONDUCTO ASPIRACIÓN AZKOY CO	AZKOY SUCTION PIPE	_	1									

ZONA / ZONE	PARTE FUNCIONAL LAVADO / WASHING FUNCTIONAL PART	LÁMINA / DRAWING	C-3287	FAGOR

ITEM	REFERENCIA REFERENCE	DENOMINACIÓN	DENOMINATION	CO-500-501	CO-500-501 DD						RECOMMENDED	ELIMINADO ELIMINATED	INTRODUCIDO INTRODUCED	NOTAS / NOTES
33	11000079	CONDUCTO DOSIF. TRANSP 6X4	DISPENSER TRANSPARENT PIPE	_	1									
34	12023707	BRIDA ELASTICA TUBO	ELASTIC CLAMP FOR PIPES	_	1									
35	12024353	PESO FILTRO	FILTER'S WEIGHT	_	1									
36	12024470	SOPORTE RAMAS ACLARAD.COM	RINSE BRANCH SUPPORT	2	2									
37	12113595	RAMA ACLARADO DCH COMPLETA	COMPLETE RIGHT RINSE BRANCH	2	2									
38	12024252	TOBERA ACLARADO	RINSE NOZZLE	12	12									
	19022347	**KIT DOSIFICADOR DETERGENTE EVO**	**DETERGENT DISPENSER KIT EVO**											

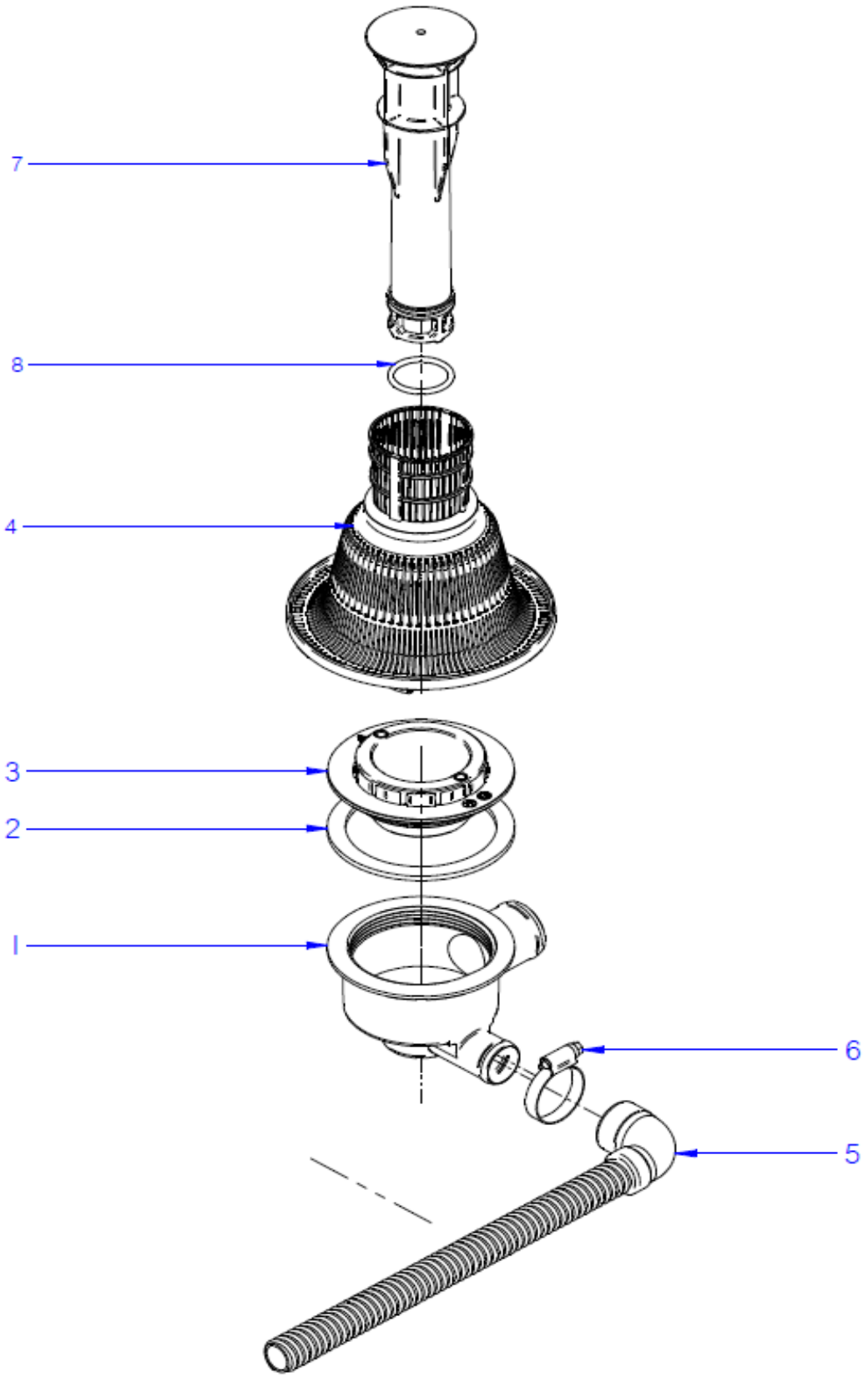

Drawing Nr.	Signature	Date	DESAGÜE / DRAINING PART	Sheet
C3288	Iban R.	oct-14	CO-500-501	3

FAGOR

ZONA / ZONE	DESAGÜE / DRAIN	LÁMINA / DRAWING	C-3288	FAGOR

ITEM	REFERENCIA REFERENCE	DENOMINACIÓN	DENOMINATION	CO-500-501							RECOMMENDED	ELIMINADO ELIMINATED	INTRODUCIDO INTRODUCED	NOTAS / NOTES
1	12041533	CUBETA A.F. ADVANCE	FRONT LOADING PAIL ADVANCE	1										
2	12041925	JUNTA Ø110xØ89x3.5	Ø110xØ89x3.5 SEAL	1										
3	12041600	AMARRE CUBETA A.F. ADVANCE	FRONT LOADING PAIL FASTENING	1										
4	12150515	FILTRO COMPLETO CONCEPT	COMPLETE FILTER CONCEPT	1										
5	12115471	MANGUERA DESAGÜE	DRAINING PIPE	1							X			
6	12009997	ABRAZADERA 25-40	25-40 CLAMP	1										
7	12049632	ALIVIADERO COMPLETO	COMPLETE SPILLWAY	1										
8	12115850	JUNTA TORICA ALIVIADERO	SPILLWAY O-RING	1										
	19013376	**KIT BOMBA DE DESAGÜE**	**DRAINING PUMP KIT**											

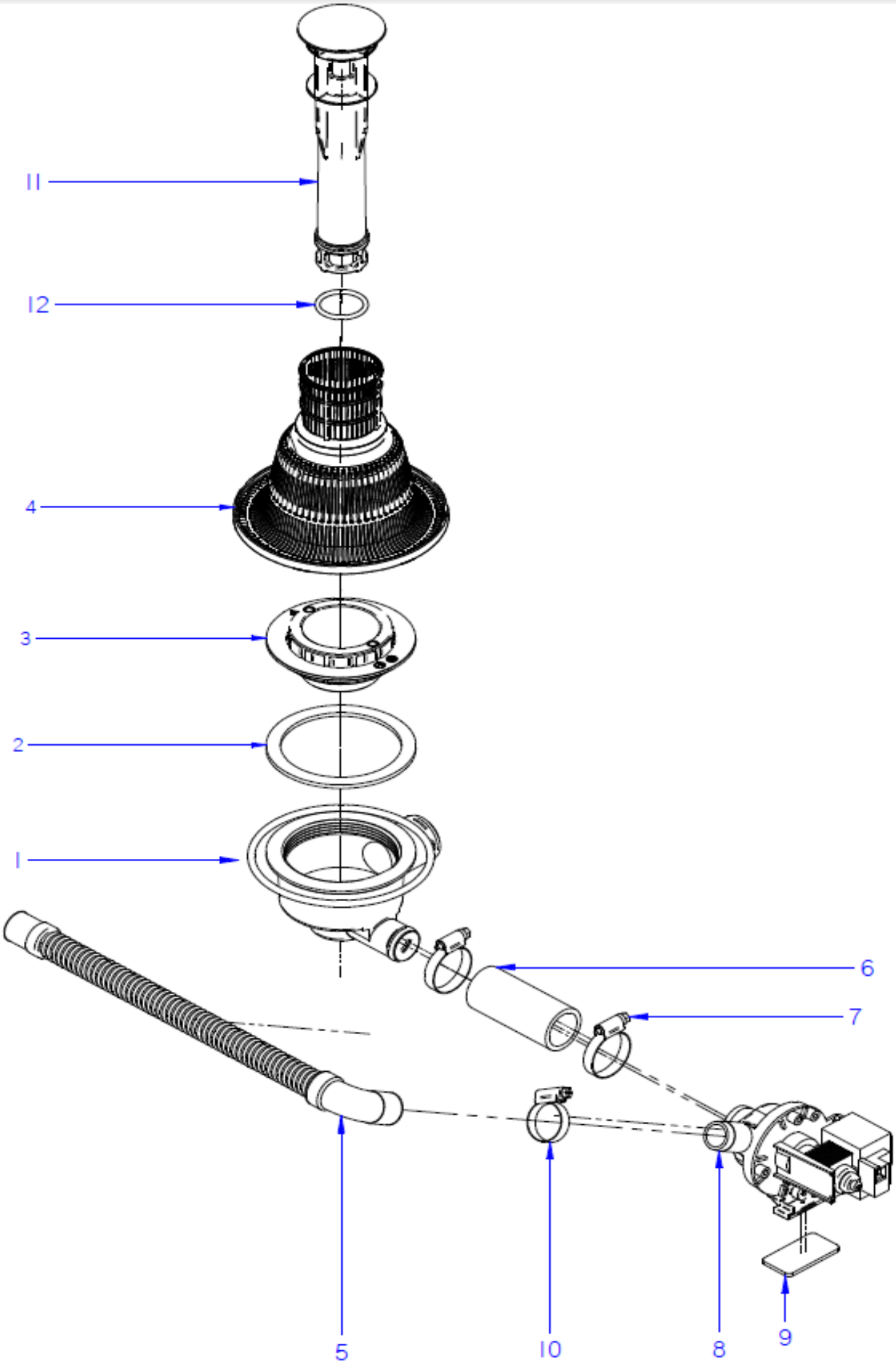

Drawing Nr.	Signature	Date	DESAGÜE (BOMBA) / DRAIN (PUMP)	Sheet
C3289	Iban R.	nov-14	CO-500-501	4

FAGOR

ZONA / ZONE	DESAGÜE / DRAIN	LÁMINA / DRAWING	C-3289	FAGOR

ITEM	REFERENCIA REFERENCE	DENOMINACIÓN	DENOMINATION	CO-500-501 B							RECOMMENDED	ELIMINADO ELIMINATED	INTRODUCIDO INTRODUCED	NOTAS / NOTES
1	12041533	CUBETA A.F.	FRONT LOADING PAIL	1										
2	12041925	JUNTA Ø110xØ89x3.5	Ø110xØ89x3.5 SEAL	1										
3	12041600	AMARRE CUBETA A.F. ADVANCE	FRONT LOADING PAIL FASTENING	1										
4	12150515	FILTRO COMPLETO CONCEPT	COMPLETE FILTER CONCEPT	1										
5	12023666	MANGUERA DESAGÜE	DRAINING PIPE	1							X			
6	12041924	COND. CUBETA-BOMBA DESAGÜE	PAIL - DRAINING PUMP PIPE	1										
7	12009997	ABRAZADERA 25-40	25-40 CLAMP	2										
8	12094265	BOMBA DESAGÜE	DRAINING PUMP	1							X			
9	12010021	JUNTA GUIA	GUIDE SEAL	1										
10	12010023	ABRAZADERA 20-32	20-32 CLAMP	1										
11	12114854	ALIVIADERO COMP. VERSION BD	DR. PUMP VERSION SPILLWAY	1										
12	12115850	JUNTA TORICA ALIVIADERO	SPILLWAY O-RING	1										

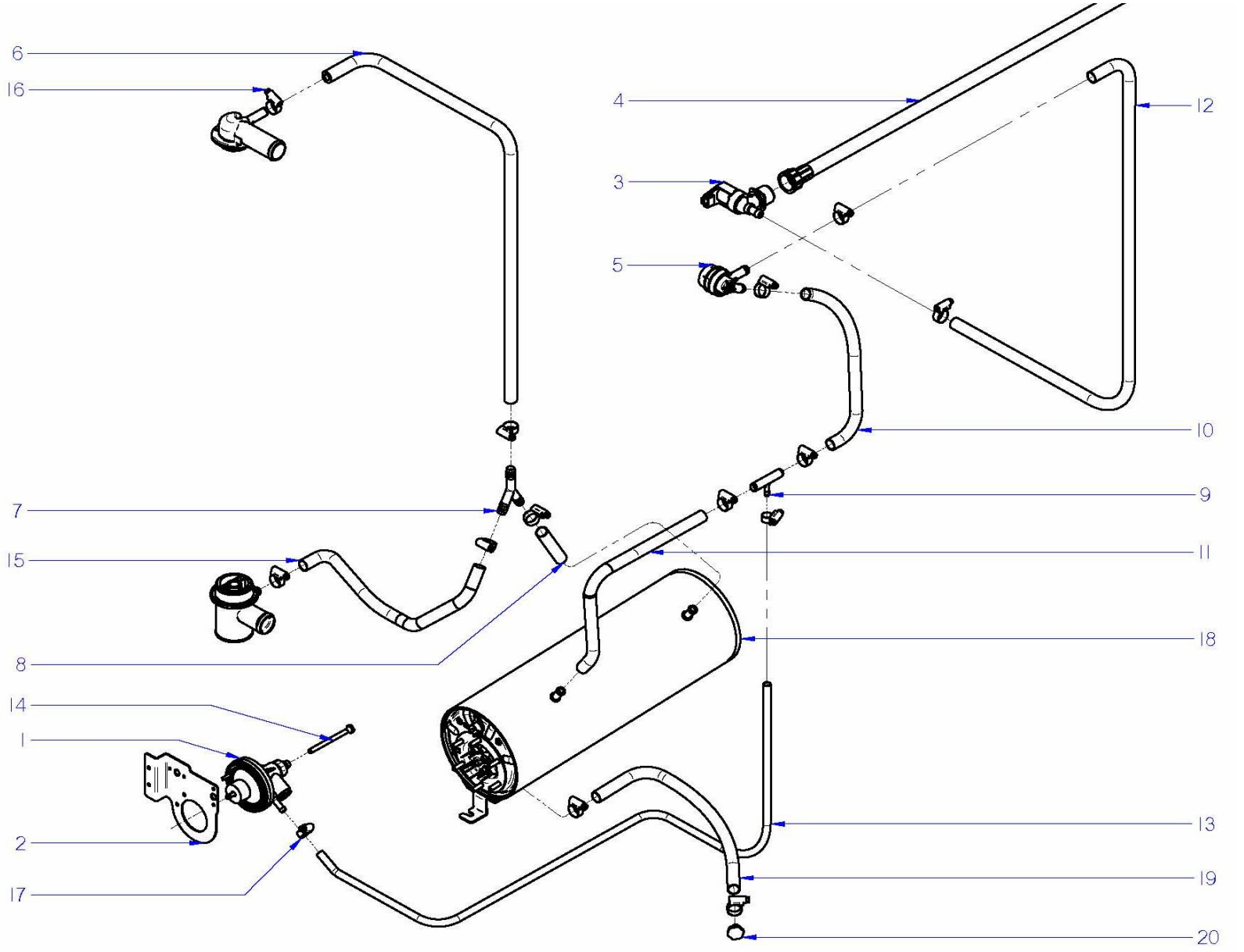

Drawing Nr.	Signature	Date	ACLARADO / RINSE	Sheet
C-3290	Iban R.	oct-15	CO-500-501	5

FAGOR

ZONA / ZONE	PARTE FUNCIONAL ACLARADO / FUNCTIONAL RINSE PART	LÁMINA / DRAWING	C-3290	FAGOR

ITEM	REFERENCIA REFERENCE	DENOMINACIÓN	DENOMINATION	CO-500-501							RECOMMENDED	ELIMINADO ELIMINATED	INTRODUCIDO INTRODUCED	NOTAS / NOTES
1	12136986	KIT DOSIF. ABRILL. HIDRAULIC. SEKO	KIT HIDRAUL. RINSE AID DISP. SEKO	1								01/05/2016		SOLO / ONLY **B** MODELS
1	12133010	DOSIFICADOR ABRILL. SEKO	SEKO RINSE AID DISPENSER	1							X			
2	12136226	SOPORTE TERMOSTATO Y DOSIFIC	THERMOST. AND DISPENSER SUPP.	1										
3	12095427	E.V SIMPLE 220V SALIDA A 90º	SIMPLE E.V 90º EXIT	1							X			
4	12024115	MANGUERA ENTRADA AGUA	WATER SUPPLY HOSE	1										
5	12024568	VALVULA ANTIRRETORNO	NON-RETURN VALVE	1										
6	11000083	TUBO GOMA NEGRA D 17x10	BLACK RUBBER PIPE D 17x10	1										
7	12023511	RACORD EN Y	Y FITTING	1										
8	11000083	TUBO GOMA NEGRA D 17x10	BLACK RUBBER PIPE D 17x10	1										
9	12025288	TOMA PRESION	PRESSURE FITTING	1										
10	11000083	TUBO GOMA NEGRA D 17x10	BLACK RUBBER PIPE D 17x10	1										
11	11000083	TUBO GOMA NEGRA D 17x10	BLACK RUBBER PIPE D 17x10	1										
12	11000083	TUBO GOMA NEGRA D 17x10	BLACK RUBBER PIPE D 17x10	1										
13	11002150	TUBO_EPDM_TRENZADO_6x12	BRIDED PIPE D 6X12	1										
14	12024139	CONDUCTO ASPIRACIÓN AZKOY CO	AZKOY SUCTION PIPE	1										
15	11000083	TUBO GOMA NEGRA D 17x10	BLACK RUBBER PIPE D 17x10	1										
16	12010036	ABRAZADERA 12-20	12-20 CLAMP	10										
17	12010047	ABRAZADERA 8-14L	8-14L CLAMP	2										
18	12097081	CALDERIN CONCEPT SOLDADO	CONCEPT BOILER WELDED	1										
19	11000083	TUBO GOMA NEGRA D 17x10	BLACK RUBBER PIPE D 17x10	1										
20	12041528	TAPON M10x1.5	M10x1.5 CAP	1										

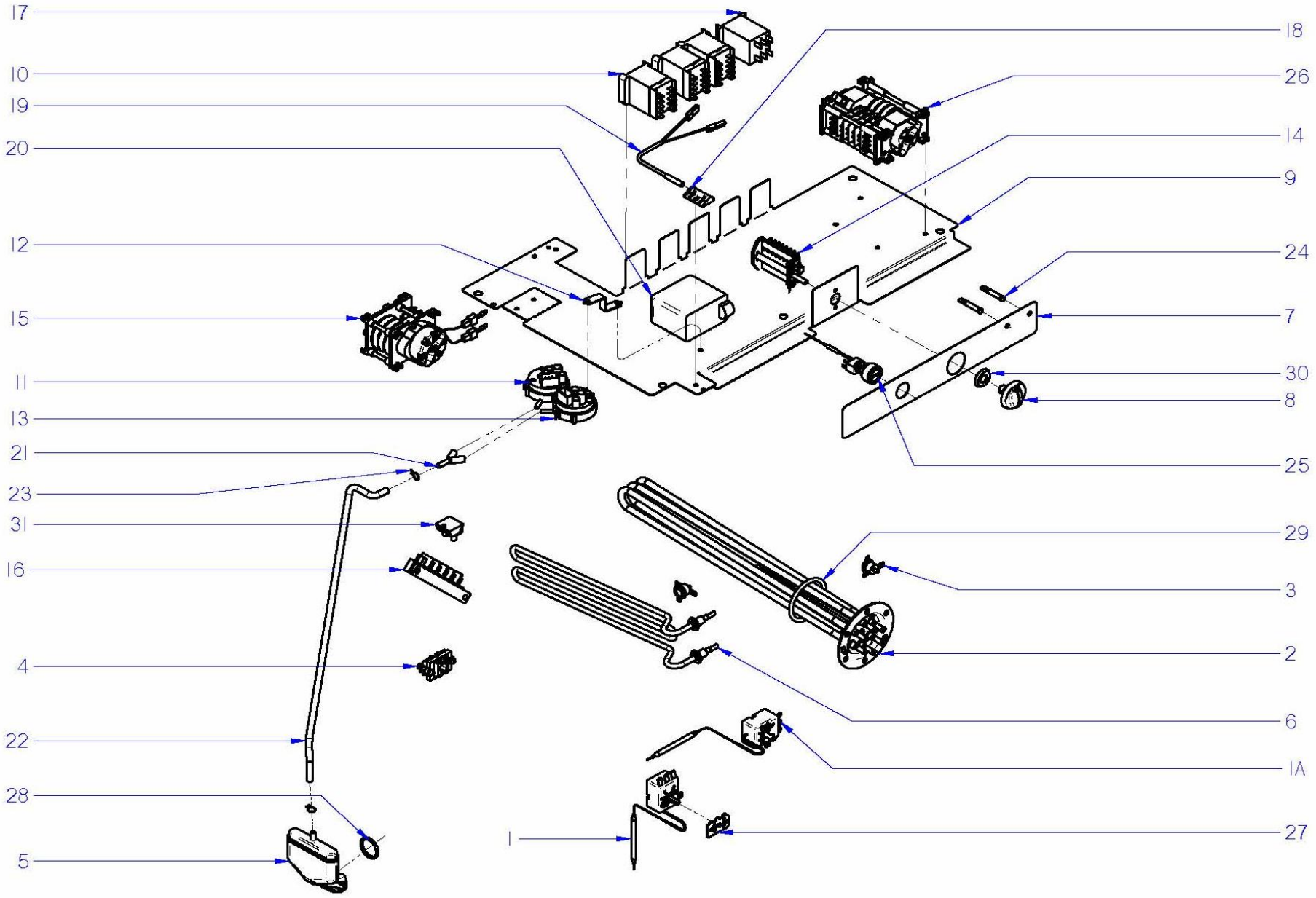

CO-501 HASTA / UNTIL 07-03-2016

Drawing Nr.	Signature	Date	CONJUNTO ELECTRICO / ELECTRIC PART	Sheet
C-3291	Iban R.	nov-15	CO-500-501	7

FAGOR

ZONA / ZONE	CONJ. ELECTRICO / ELECT. PART (CO-501 UNTIL 07-03-2016)	LÁMINA / DRAWING	C-3291	FAGOR

ITEM	REFERENCIA REFERENCE	DENOMINACIÓN	DENOMINATION	CO-500	CO-501						RECOMMENDED	ELIMINADO ELIMINATED	INTRODUCIDO INTRODUCED	NOTAS / NOTES
1	12130561	KIT TERMOSTATO TECASA 85 + REG.	KIT THERMOSTAT TECASA 85 + REG.	1	1						X			
1A	12134992	TERMOSTATO CALDERIN 85º TECASA	THERMOSTAT 85°C TECASA	1	1									
2	12098745	RESISTENCIA CALDERIN 6KW	BOILER'S RESISTOR 6KW	1	1									
3	12096597	TERM.SEG. 261B 110ºC FAST 90	SAFETY THER. 261B 110ºC FAST 90	2	2						X			
4	12024230	RETENEDOR DE CABLE	CABLE RETAINER	1	1									
5	12093146	CAMPANA TANQUE	TUB'S PRESSURE CHAMBER	1	1						X			
6	12048965	RESISTENCIA TANQUE 2800W	TUB'S RESISTOR 2800W	1	1						X			
7	12092556	EMBELLECEDOR CO-501 SOFT	CO-501 STICKER	1	1						X			
8	12115972	CONJUNTO MANDO CONCEPT	CONCEPT KNOB ASSEMBLED	1	1						X			
9	12047982	SOP. COMPONENTES ELECTRICOS	ELECTRIC COMPONENTS SUPPORT	1	1									
10	12024011	CONTACTOR 230 V. 50-60 HZ	230 V. 50-60 HZ CONTACTOR	3	3						X			
11	12096970	PRESOSTATO 1,40-6,30 BAR SIMPLE	1,40-6,30 BAR PRESSURE SWITCH	1	1						X			
12	12098323	SOPORTE PRESOSTATO AF	PRESSURE SWITCH SUPPORT	1	1									
13	12096968	PRESOSTATO 1,40-6,30 BAR SIMPLE	1,40-6,30 BAR PRESSURE SWITCH	1	1						X			
14	12024445	CONMUTADOR DE FUNCIONES	SWITCH FOR FUNCTIONS	1	1									
16	12025183	REGLETA AUXILIAR FV-122	AUX. CONNECTION STRIP FV-122	1	1									
17	12023706	RELE 230V. 16A 50-60 HZ	230V. 16A 50-60 HZ RELAY	1	1						X			
18	12024066	AMARRE INTERRUPTOR MAGNETICO	MAGNETIC SWITCH'S SUPPORT	1	1									
19	12024477	INTERRUPTOR MAGNETICO	MAGNETIC SWITCH	1	1						X			
20	12110686	SOFT START AF	SOFT START AF	1	1						X			
21	12023510	RACORD EN Y	Y FITTING	1	1									
22	11000066	TUBO GOMA NEGRO D 8*4	BLACK RUBBER PIPE D 8*4	1	1									
23	12023707	BRIDA ELASTICA TUBO	ELASTIC CLAMP FOR PIPES	2	2									
24	12132355	PILOTO BLANCO	WHITE PILOT	2	2									
25	12115383	PULSADOR 220V AC 5A 1VIA 1POS	220V AC 5A 1WAY 1POS PUSHBUTTON	1	1						X			
26	12092150	PROGRAMADOR 230V AC 50Hz 5LEV	PROGRAMMER 230 AC 50Hz 16A 5LEV	1	1						X	08/09/2016		
26	12024873	PROGRAMADOR DE CICLO	CYCLE PROGRAMMER	1	_						X		08/09/2016	
26	12102987	PROGRAMADOR 230V AC 60Hz 5LEV	PROGRAMMER 230 AC 60Hz 16A 5LEV	1	1						X	07/03/2016		
26	12024871	PROGRAMADOR 230V AC 60Hz 5LEV	PROGRAMMER 230 AC 60Hz 16A 5LEV	1	1						X		07/03/2016	
27	12044848	REGULADOR A 60ºC Tt DE 85ºC	60ºC Tt DE 85ºC REGULATOR	1	1									
28	12093145	JUNTA TORICA CAMPANA	PRESSURE CHAMBER'S O-RING	1	1									

ZONA / ZONE	CONJ. ELECTRICO / ELECT. PART (CO-501 UNTIL 07-03-2016)	LÁMINA / DRAWING	C-3291	FAGOR

ITEM	REFERENCIA REFERENCE	DENOMINACIÓN	DENOMINATION	CO-500	CO-501						RECOMMENDED	ELIMINADO ELIMINATED	INTRODUCIDO INTRODUCED	NOTAS / NOTES
29	12010051	JUNTA TORICA RESIST. CALDERIN	BOILER'S RESISTOR'S O-RING	1	1						X			
30	12024516	JUNTA CONMUTADOR	FUNCTIONS SWITCH SEAL	1	1									
31	12024110	REGLETA DE CONEXIONES	CONNECTION STRIP	1	1									

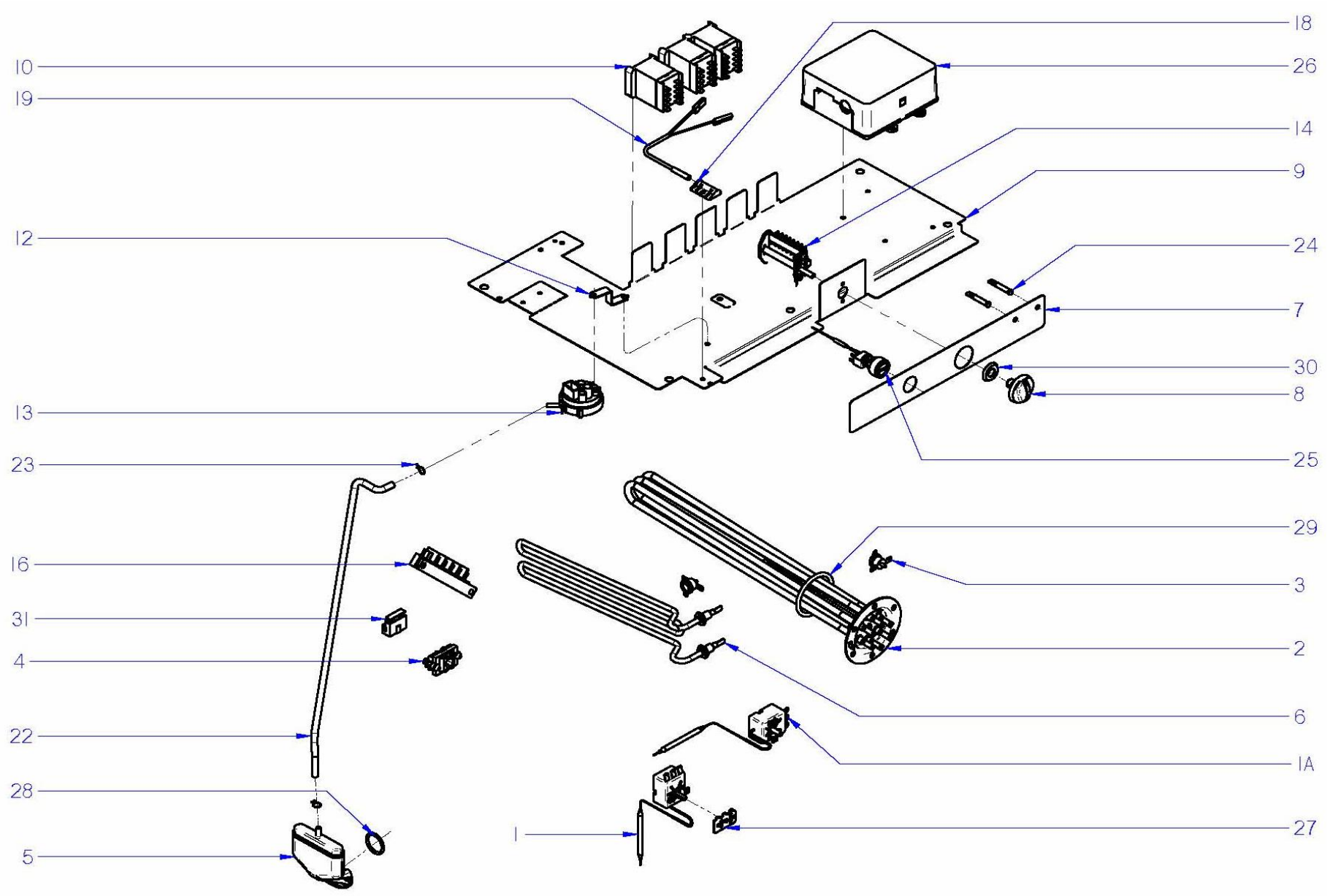

DESDE-FROM 07-03-2016

Drawing Nr.	Signature	Date	CONJUNTO ELECTRICO / ELECTRIC PART	Sheet
C-3291-1	Iban R.	mar-16	CO-501	7

FAGOR

ZONA / ZONE	CONJ. ELECTRICO / ELECT. PART **DESDE / FROM 07-03-2016**	LÁMINA / DRAWING	C-3291-1	FAGOR

ITEM	REFERENCIA REFERENCE	DENOMINACIÓN	DENOMINATION	CO-501							RECOMMENDED	ELIMINADO ELIMINATED	INTRODUCIDO INTRODUCED	NOTAS / NOTES
1	12130561	KIT TERMOSTATO TECASA 85 + REG.	KIT THERMOSTAT TECASA 85 + REG.	1							X			
1A	12134992	TERMOSTATO CALDERIN 85º TECASA	THERMOSTAT 85°C TECASA	1										
2	12098745	RESISTENCIA CALDERIN 6KW	BOILER'S RESISTOR 6KW	1							X			
3	12096597	TERM.SEG. 261B 110ºC FAST 90	SAFETY THER. 261B 110ºC FAST 90	2							X			
4	12024230	RETENEDOR DE CABLE	CABLE RETAINER	1										
5	12093146	CAMPANA TANQUE	TUB'S PRESSURE CHAMBER	1							X			
6	12048965	RESISTENCIA TANQUE 2800W	TUB'S RESISTOR 2800W	1							X			
7	12132310	EMBELLECEDOR CO-501	CO-501 STICKER	1							X			
8	12115972	CONJUNTO MANDO CONCEPT	CONCEPT KNOB ASSEMBLED	1							X			
9	12047982	SOP. COMPONENTES ELECTRICOS	ELECTRIC COMPONENTS SUPPORT	1										
10	12024011	CONTACTOR 230 V. 50-60 HZ	230 V. 50-60 HZ CONTACTOR	3							X			
12	12098323	SOPORTE PRESOSTATO AF	PRESSURE SWITCH SUPPORT	1										
13	12096968	PRESOSTATO 1,40-6,30 BAR SIMPLE	1,40-6,30 BAR PRESSURE SWITCH	1							X			
14	12133039	CONMUTADOR DE FUNCIONES	SWITCH FOR FUNCTIONS	1										
16	12025183	REGLETA AUXILIAR FV-122	AUX. CONNECTION STRIP FV-122	1										
18	12024066	AMARRE INTERRUPTOR MAGNETICO	MAGNETIC SWITCH'S SUPPORT	1										
19	12024477	INTERRUPTOR MAGNETICO	MAGNETIC SWITCH	1							X			
22	11000066	TUBO GOMA NEGRO D 8*4	BLACK RUBBER PIPE D 8*4	1										
23	12023707	BRIDA ELASTICA TUBO	ELASTIC CLAMP FOR PIPES	2										
24	12087178	PILOTO BLANCO	WHITE PILOT	2										
25	12115384	PULSADOR 5V DC 5A	220V 5V DC 5A PUSHBUTTON	1							X			
26	12110837	CONTROL TARJETA 230V AC 50/60 HZ	230V AC 50/60 HZ CONTROL CARD	1							X			
27	12044848	REGULADOR A 60ºC Tt DE 85ºC	60ºC Tt DE 85ºC REGULATOR	1										
28	12093145	JUNTA TORICA CAMPANA	PRESSURE CHAMBER'S O-RING	1										
29	12010051	JUNTA TORICA RESIST. CALDERIN	BOILER'S RESISTOR'S O-RING	1							X			
30	12024516	JUNTA CONMUTADOR	FUNCTIONS SWITCH SEAL	1										
31	12045569	BORNA PORTAFUSIBLE 13A 2,50MM2	13A 2,50MM2 FUSE TERMINAL	1										
	12024152	FUSIBLE 10A DIAMETRO 5 MM 20X5	10A 5MM 20X5 FUSE	1										

ZONA / ZONE	VARIOS / VARIOUS	LÁMINA / DRAWING		FAGOR

ITEM	REFERENCIA REFERENCE	DENOMINACIÓN	DENOMINATION	CO-500	CO-501						RECOMMENDED	ELIMINADO ELIMINATED	INTRODUCIDO INTRODUCED	NOTAS / NOTES
	12117503	CABLEADO PORTAMAN. CO-21-48-64	CNTRL. PANEL WIRING CO-21-48-64	1	1							07/03/2016		
	12133140	CABLEADO CONTRL. CONMUT.	CONTRL. PANEL WIRING CO-501	_	1								08/03/2016	
	12117503	CABLEADO PORTAMAN. CO-21-48-64	CNTRL. PANEL WIRING CO-21-48-64	1	_								08/03/2016	
	12119611	INSTALACION GENERAL CO 64, 48	ELECTRICAL WIRING CO-64-48	1	1							07/03/2016		
	12133130	INSTALACIÓN ELECTRICA CO-500	ELECTRICAL WIRING CO-500	1	_								07/03/2016	
	12133132	INSTALACIÓN ELECTRICA CO-501	ELECTRICAL WIRING CO-501	_	1								08/03/2016	Con conmutador 12133039
	12024651	CABLE DE ALIMENTACION 4X2.5MM2	POWER CORD 4X2.5MM2	1	1									
	12009946	CABLEADO TENSOR	TENSIONER WIRING	1	1									
	12117380	CABLEADO RESIS+DIODO PARA LED	RESIST+DIODE FOR LED WIRING	2	3									
	12120166	CABL. ADAPTADOR H6,3 - RAST 5	H6,3 - RAST 5 ADAPTER WIRING	_	1								07/03/2016	
	12110837	CONTROL TARJETA 230V AC 50/60 HZ	230V AC 50/60 HZ CONTROL CARD	_	1								08/03/2016	

ZONA / ZONE	RECOMENDADOS / RECOMMENDED	LÁMINA / DRAWING		FAGOR

ITEM	REFERENCIA REFERENCE	DENOMINACIÓN	DENOMINATION	CO-500	CO-500 DD	CO-500 B	CO-500 B DD					ELIMINADO ELIMINATED	INTRODUCIDO INTRODUCED	NOTAS / NOTES
1	12024376	CONDENSADOR 10MF	10MF CAPACITOR	1	1	1	1							C-3287
4	12043287	MOTOBOMBA 590KW 50Hz	WASHIG PUMP 590KW 50Hz	1	1	1	1							C-3287
4	12102834	MOTOBOMBA 590KW 60Hz	WASHIG PUMP 590KW 60Hz	1	1	1	1							C-3287
30	12024216	DOSIFIC. DGTE REGULABLE G300	REGUL. DETERG. DISPENSER G300	_	1	_	1							C-3287
5	12115471	MANGUERA DESAGÜE	DRAINING PIPE	1	1	_	_							C-3288
5	12023666	MANGUERA DESAGÜE	DRAINING PIPE	_	_	1	1							C-3289
8	12094265	BOMBA DESAGÜE	DRAINING PUMP	_	_	1	1							C-3289
1	12133010	DOSIFICADOR ABRILL. SEKO	SEKO RINSE AID DISPENSER	1	1	1	1							C-3290
3	12095427	E.V SIMPLE 220V SALIDA A 90º	SIMPLE E.V 90º EXIT	1	1	1	1							C-3290
1	12130561	KIT TERMOSTATO TECASA 85 + REG.	KIT THERMOSTAT TECASA 85 + REG.	1	1	1	1							C-3291
2	12098745	RESISTENCIA CALDERIN 6KW	BOILER'S RESISTOR 6KW	1	1	1	1					07/03/2016		C-3291
2	12098745	RESISTENCIA CALDERIN 2,8KW	BOILER'S RESISTOR 2.8KW	1	1	1	1						07/03/2016	C-3291
3	12096597	TERM.SEG. 261B 110ºC FAST 90	SAFETY THER. 261B 110ºC FAST 90	2	2	2	2							C-3291
5	12093146	CAMPANA TANQUE	TUB'S PRESSURE CHAMBER	1	1	1	1							C-3291
6	12048965	RESISTENCIA TANQUE 2800W	TUB'S RESISTOR 2800W	1	1	1	1							C-3291
7	12092556	EMBELLECEDOR CO-501	CO-501 STICKER	1	1	1	1					07/03/2016		C-3291
7	12093682	EMBELLECEDOR CO-400 B	CO-400 B STICKER	1	1	1	1						07/03/2016	C-3291
8	12115972	CONJUNTO MANDO CONCEPT	CONCEPT KNOB ASSEMBLED	1	1	1	1							C-3291
10	12024011	CONTACTOR 230 V. 50-60 HZ	230 V. 50-60 HZ CONTACTOR	3	3	3	3							C-3291
11	12096970	PRESOSTATO 1,40-6,30 BAR SIMPLE	1,40-6,30 BAR PRESSURE SWITCH	1	1	1	1							C-3291
13	12096968	PRESOSTATO 1,40-6,30 BAR SIMPLE	1,40-6,30 BAR PRESSURE SWITCH	1	1	1	1							C-3291
14	12024445	CONMUTADOR DE FUNCIONES	SWITCH FOR FUNCTIONS	1	1	1	1					07/03/2016		C-3291
14	12024972	CONMUTADOR DE FUNCIONES	SWITCH FOR FUNCTIONS	1	1	1	1						07/03/2016	C-3291
17	12023706	RELE 230V. 16A 50-60 HZ	230V. 16A 50-60 HZ RELAY	1	1	1	1							C-3291
19	12024477	INTERRUPTOR MAGNETICO	MAGNETIC SWITCH	1	1	1	1							C-3291
20	12110686	SOFT START AF	SOFT START AF	1	1	1	1							C-3291
25	12115383	PULSADOR 220V AC 5A 1VIA 1POS	220V AC 5A 1WAY 1POS PUSHBUTTON	1	1	1	1							C-3291
26	12092150	PROGRAMADOR 230V AC 50Hz 5LEV	PROGRAMMER 230 AC 50Hz 5LEV	1	1	1	1							C-3291
26	12102987	PROGRAMADOR 230V AC 60Hz 5LEV	PROGRAMMER 230 AC 60Hz 5LEV	1	1	1	1							C-3291
29	12010051	JUNTA TORICA RESIST. CALDERIN	BOILER'S RESISTOR'S O-RING	1	1	1	1							C-3291

ZONA / ZONE	RECOMENDADOS / RECOMMENDED	LÁMINA / DRAWING		FAGOR

ITEM	REFERENCIA REFERENCE	DENOMINACIÓN	DENOMINATION	CO-501	CO-501 DD	CO-501 B	CO-501 B DD					ELIMINADO ELIMINATED	INTRODUCIDO INTRODUCED	NOTAS / NOTES
1	12024376	CONDENSADOR 10MF	10MF CAPACITOR	1	1	1	1							C-3287
4	12043287	MOTOBOMBA 590KW 50Hz	WASHIG PUMP 590KW 50Hz	1	1	1	1							C-3287
4	12102834	MOTOBOMBA 590KW 60Hz	WASHIG PUMP 590KW 60Hz	1	1	1	1							C-3287
30	12024216	DOSIFIC. DGTE REGULABLE G300	REGUL. DETERG. DISPENSER G300	_	1	_	1							C-3287
5	12115471	MANGUERA DESAGÜE	DRAINING PIPE	1	1	_	_							C-3288
5	12023666	MANGUERA DESAGÜE	DRAINING PIPE	_	_	1	1							C-3289
8	12094265	BOMBA DESAGÜE	DRAINING PUMP	_	_	1	1							C-3289
1	12045206	DOSIFICADOR ABRILL. AQUA	AQUA RINSE AID DISPENSER	1	1	1	1							C-3290
3	12095427	E.V SIMPLE 220V SALIDA A 90º	SIMPLE E.V 90º EXIT	1	1	1	1							C-3290
1	12130561	KIT TERMOSTATO TECASA 85 + REG.	KIT THERMOSTAT TECASA 85 + REG.	1	1	1	1							C-3291-1
2	12098745	RESISTENCIA CALDERIN 6KW	BOILER'S RESISTOR 6KW	1	1	1	1							C-3291-1
3	12096597	TERM.SEG. 261B 110ºC FAST 90	SAFETY THER. 261B 110ºC FAST 90	2	2	2	2							C-3291-1
5	12093146	CAMPANA TANQUE	TUB'S PRESSURE CHAMBER	1	1	1	1							C-3291-1
6	12048965	RESISTENCIA TANQUE 2800W	TUB'S RESISTOR 2800W	1	1	1	1							C-3291-1
7	12132310	EMBELLECEDOR CO-501	CO-501 STICKER	1	1	1	1						08/03/2016	C-3291-1
8	12115972	CONJUNTO MANDO CONCEPT	CONCEPT KNOB ASSEMBLED	1	1	1	1							C-3291-1
10	12024011	CONTACTOR 230 V. 50-60 HZ	230 V. 50-60 HZ CONTACTOR	3	3	3	3							C-3291-1
13	12096968	PRESOSTATO 1,40-6,30 BAR SIMPLE	1,40-6,30 BAR PRESSURE SWITCH	1	1	1	1							C-3291-1
14	12133039	CONMUTADOR DE FUNCIONES	SWITCH FOR FUNCTIONS	1	1	1	1							C-3291-1
19	12024477	INTERRUPTOR MAGNETICO	MAGNETIC SWITCH	1	1	1	1							C-3291-1
25	12115384	PULSADOR 5V DC 5A	5V DC 5A PUSHBUTTON	1	1	1	1							C-3291-1
26	12110837	TARJ. CONTROL AC 50/60Hz 5rel UL	CONTROL CARD AC 50/60Hz 5rel UL	1	1	1	1							C-3291-1
29	12010051	JUNTA TORICA RESIST. CALDERIN	BOILER'S RESISTOR'S O-RING	1	1	1	1							C-3291-1
	12110837	CONTROL TARJETA 230V AC 50/60 HZ	230V AC 50/60 HZ CONTROL CARD	1	1	1	1						08/03/2016	C-3291-1

CO 501

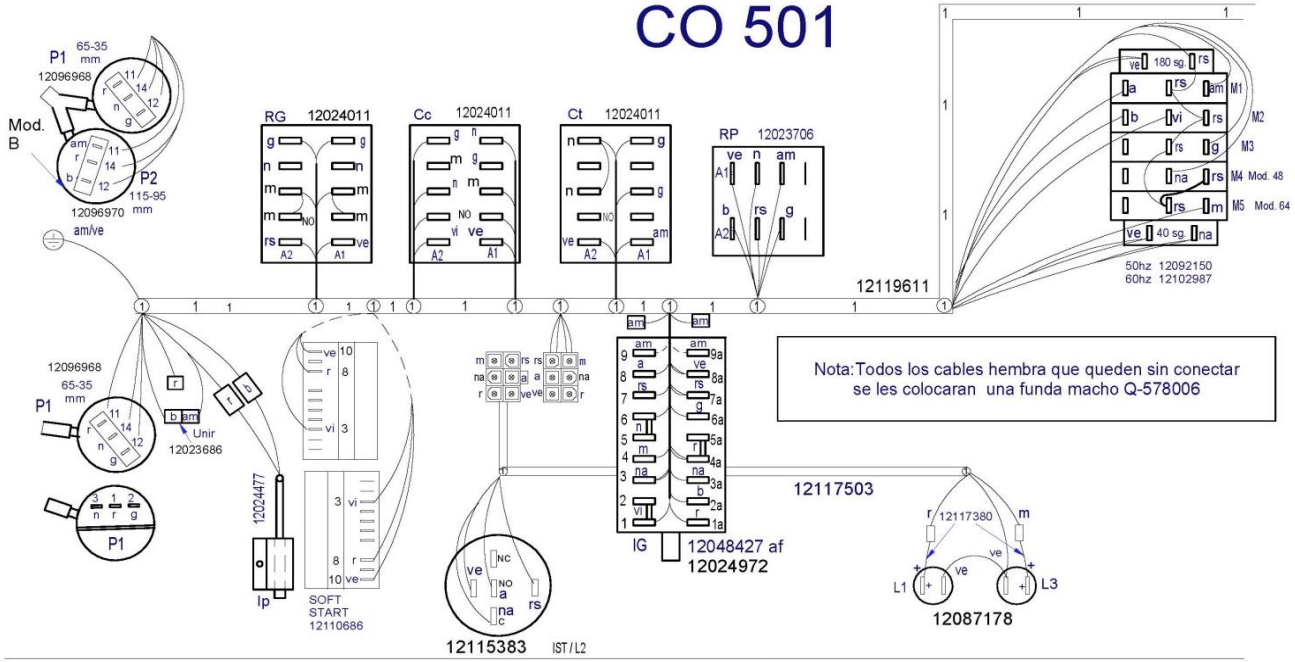

Nota: Todos los cables hembra que queden sin conectar se les colocaran una funda macho Q-578006

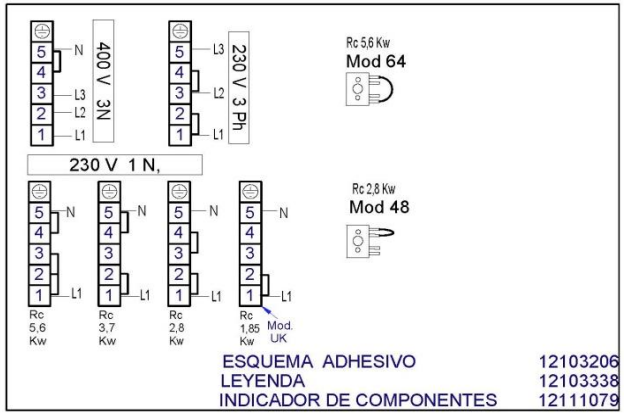

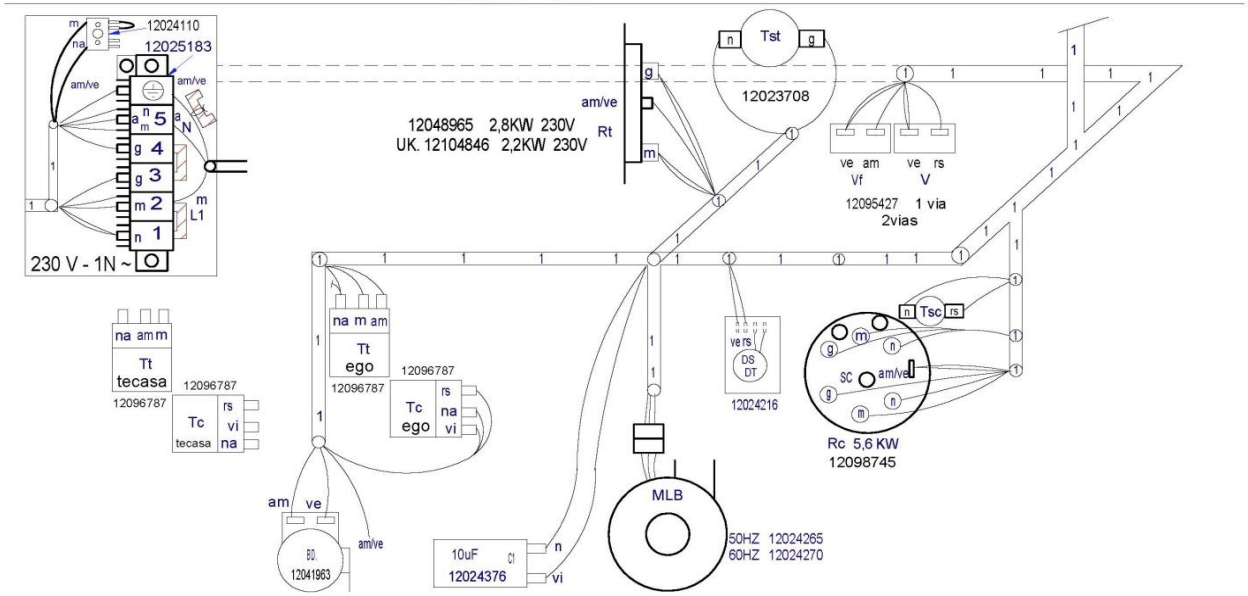

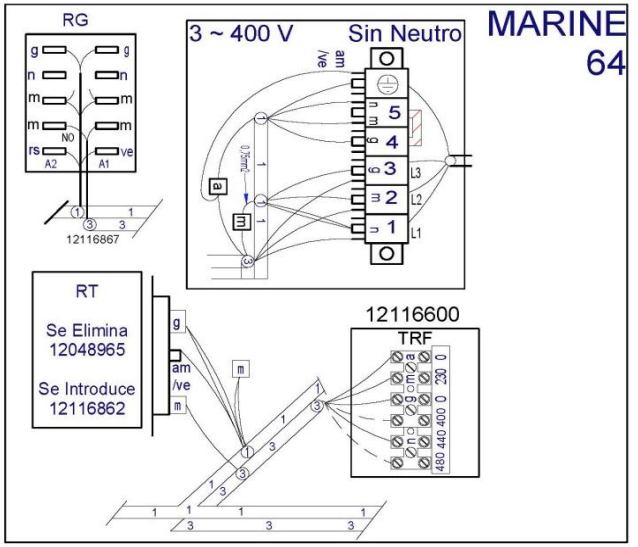

HASTA / UNTIL 07-03-2016	Drawing Nr.	Signature	Date	ESQUEMA MONTAJE / ASS. DIAGRAM	Sheet
		Iban R.	oct-15	CO-500-501	

FAGOR

CO 500

Nota:Todos los cables hembra que queden sin conectar se les colocaran una funda macho Q-578006

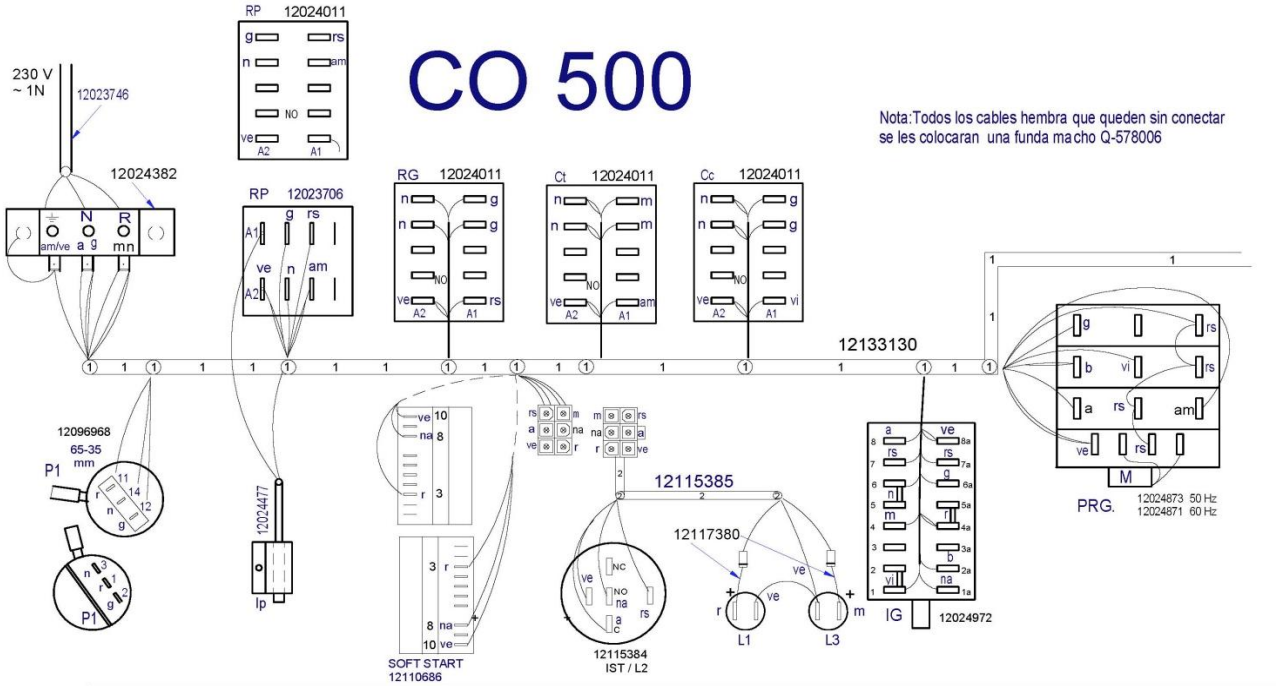

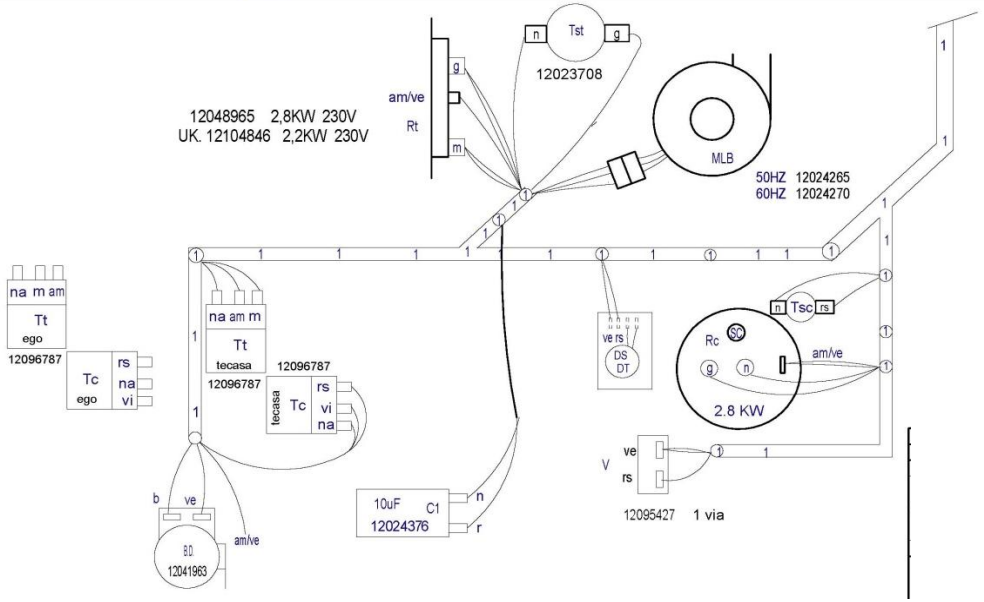

DESDE / FROM 07-03-2016	Drawing Nr.	Signature	Date	ESQUEMA MONTAJE / ASS. DIAGRAM	Sheet
		Iban R.	abr-16	CO-500	

FAGOR

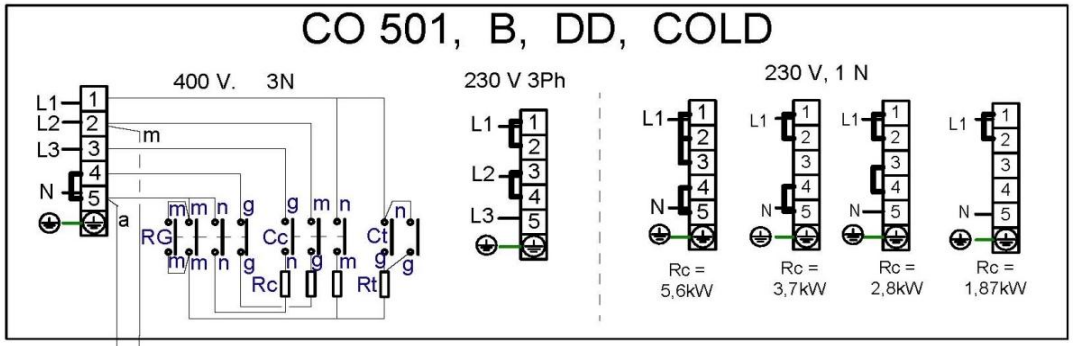

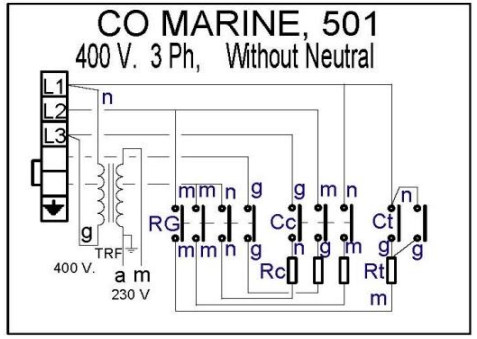

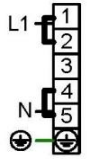

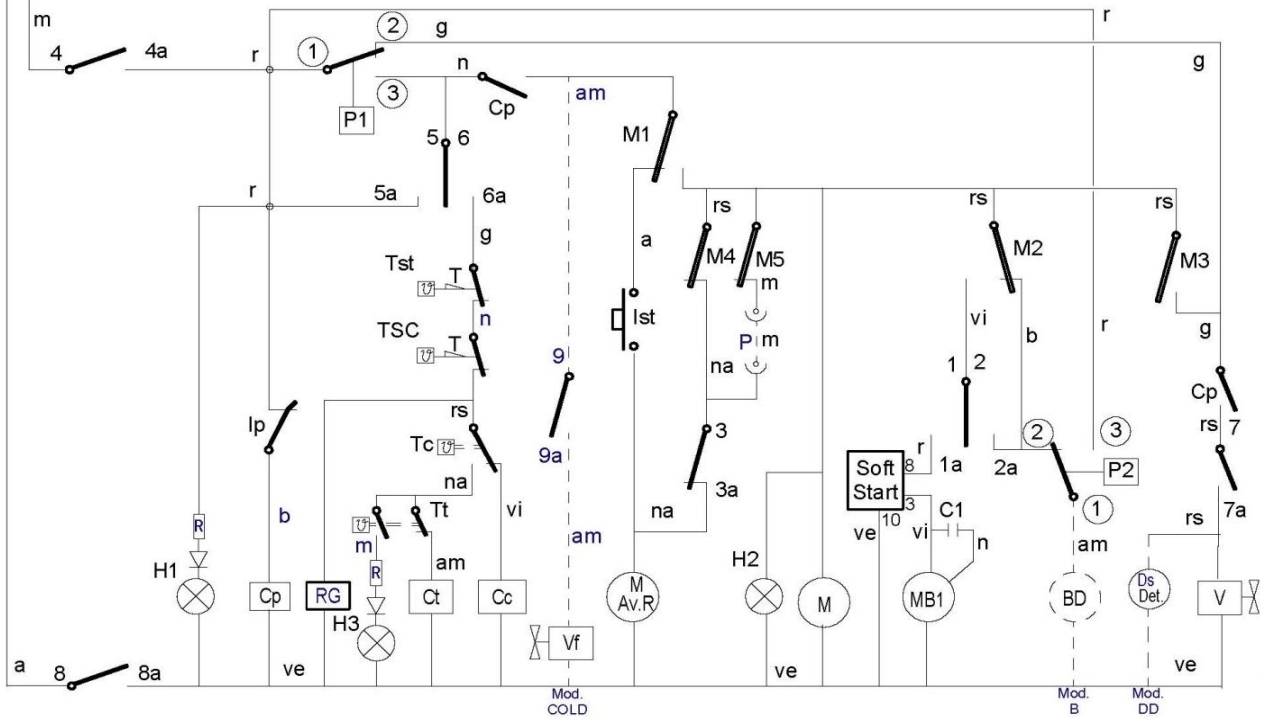

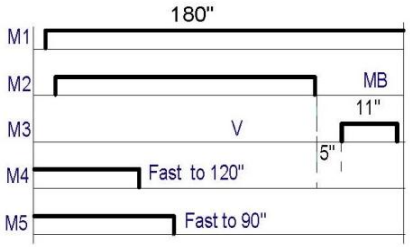

I G	1 — 2 1a	2a	3 3a	4 4a	5 — 6 5a	6a	7 7a	8 8a	9 9a
		X		X	X			X	
0									
90-120	X		X	X		X	X	X	
180	X			X		X	X	X	
	X			X		X	X	X	X

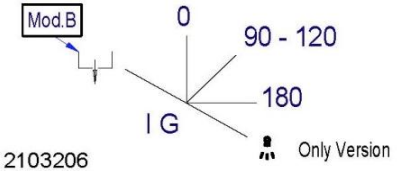

12103206

HASTA / UNTIL 07-03-2016	Drawing Nr.	Signature	Date	ESQUEMA ELECTRIC. / ELECTRIC DIAGRAM	Sheet
		Iban R.	oct-15	CO-500-501	

FAGOR

CO 500, B, DD

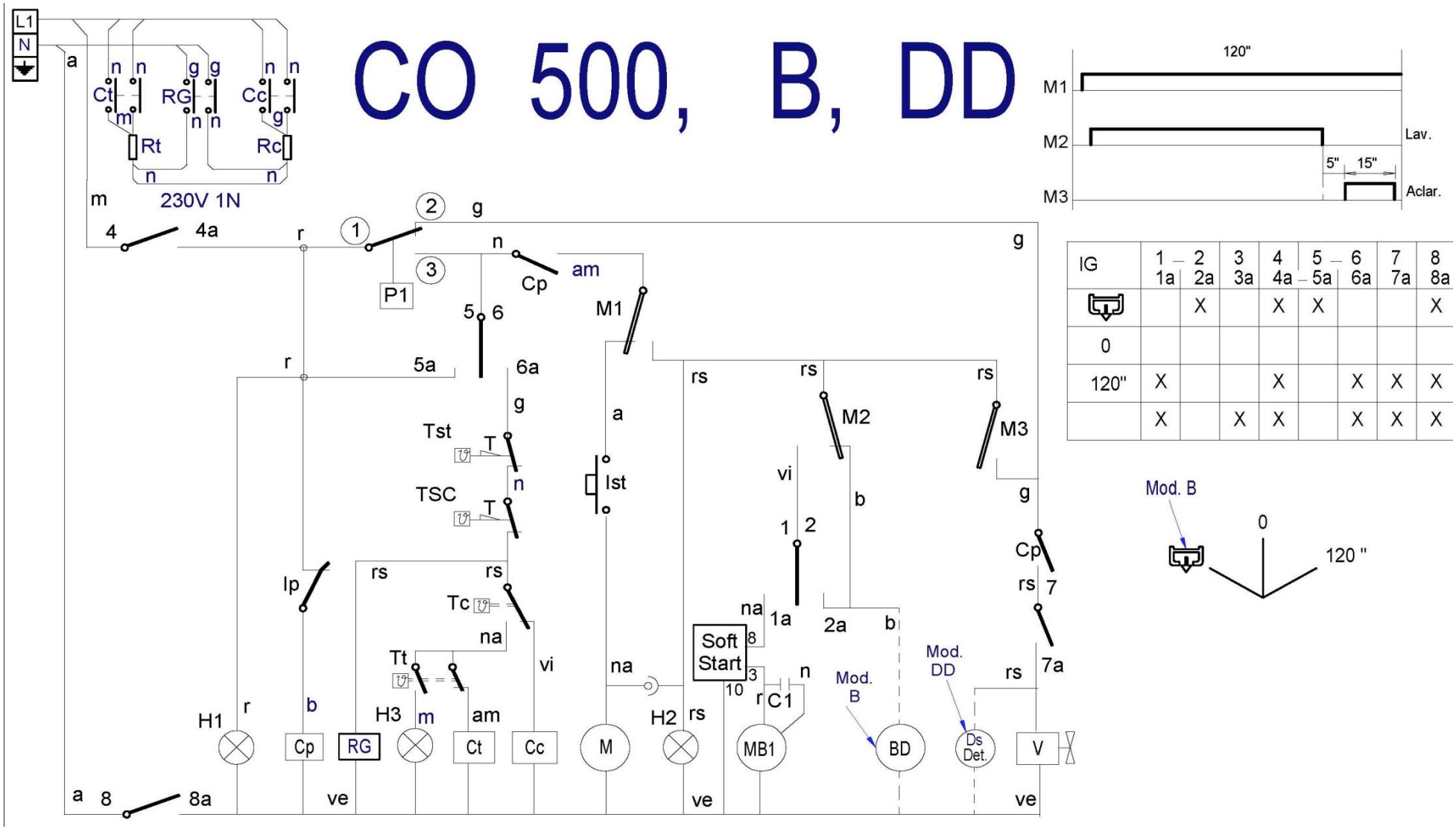

IG	1 – 1a	2 2a	3 3a	4 4a	5 – 5a	6 6a	7 7a	8 8a
		X		X	X			X
0								
120"	X			X		X	X	X
	X		X	X		X	X	X

DESDE / FROM 07-03-2016	Drawing Nr.	Signature	Date	ESQUEMA ELECTRIC. / ELECTRIC DIAGRAM	Sheet
		Iban R.	abr-16	CO-500	

FAGOR

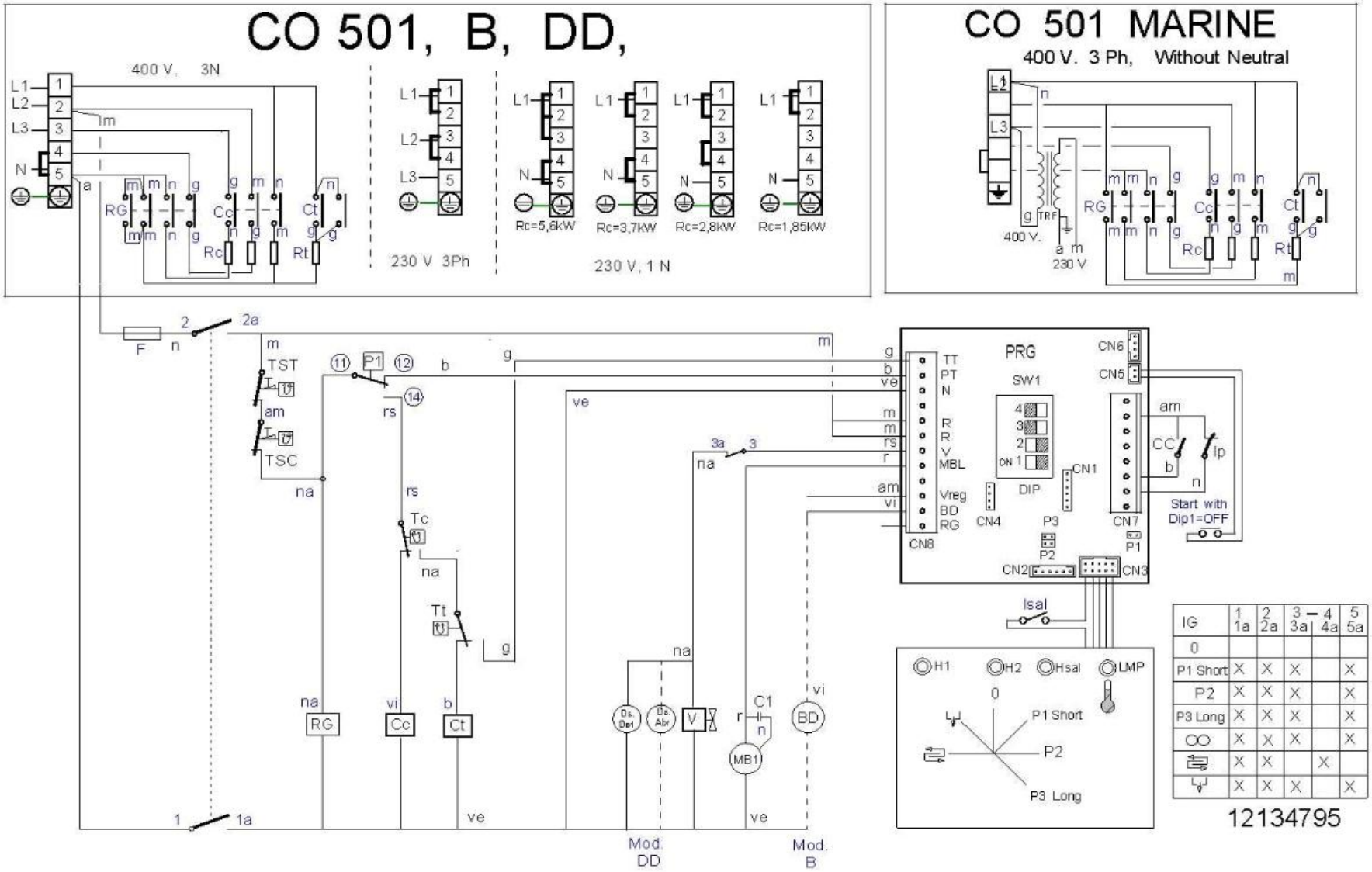

IG	1 1a	2 2a	3 – 3a	4 4a	5 5a
0					
P1 Short	X	X	X		X
P2	X	X	X		X
P3 Long	X	X	X		X
∞	X	X	X		X
⇄	X	X		X	
⏚	X	X	X		X

DESDE / FROM 07-03-2016

Drawing Nr.	Signature	Date	ESQUEMA TEORIC. / THEOR. DIAGRAM	Sheet
	Iban R.	abr-16	CO-501	

FAGOR

LEYENDA APERTURA FRONTAL Y CAPOTA

	ESPAÑOL	ENGLISH	FRANÇAIS	DEUTSCH	ITALIANO	中文
Ⓐ Ⓑ	Puntos de conexion con R	Conecction point with R	Points de conexion R	Anschlußpunkte mit R	Punti di collegamento con R	带R接触点
BA	Bomba Aclarado	Rinse pump				
BD	Bomba desagüe	Drain pump	Pompe de vidange	Abflußpumpe	Pompa scarico	排水泵
C1, C2, C3	Condensador	Condenser	Condensateur	Kondensator	Condensatore	电容
CMB	Contactor bomba lavado	Wash pump contactor	Contacteur pompe lavage	Türrelais	Contattore pompa lavaggio	清洗泵接触器
Cc	Contactor calentamiento calderin	Boiler heating contactor	Contacteur chauf. surchauffeur	Kontaktschütz Waschpumpe	Contattore riscaldamento boiler	升温箱加热接触器
Ct	Contactor calentamiento tanque	Tank heating contactor	Contacteur chaufage cuve	Kontaktschütz Boilerheizung	Contattore riscaldamento serbatoio	水箱加热接触器
CP	Rele puerta	Door relay	Relais porte	Kontaktschütz Heizung Tank	Rele porta	门继电器
Ds.	Dosificador	Detergent doser	Dosseur	Dosierer Spülmittel	Dosatore detersivo	清洗剂药液泵
E.B	Electrobomba de presion	Electric pressure pump	Electropompe de pression	Elektro-Drucksteigungspumpe	Electropompa pressione	电子压力泵
IG	Interruptor general	Main switch	Interrupteur general	Hauptschalter	Interruttore generale	主开关
IP	Micro puerta	Door microswitch	Micro porte	Mikroschalter Tür	Micro porta	门磁开关
H1	Piloto de encendido	Operation light	Voyant funcionement	Betriebsanzeigelampe	Spia accensione	运行指示灯
H2	Piloto marcha	Start light	Voyant demarrage	Startanzeigelampe	Spia avvio	开始指示灯
H3	Piloto maquina preparada	Light machine ready	Voyant machine prêt	Betriebsbereitschaftsanzeigelampe	Pilota macchina preparata	加热完成 指示灯
HSal	Piloto falta de Sal	Light Lack of Salt				
MB1, MB2	Bomba lavado	Wash pump	Pompe lavage	Waschpumpe	Pompa lavaggio	清洗泵
M	Motor programador	Motor programmer	Moteur du programmateur	Motor Programmiervorrichtung	Motore programmatore	程序电机
M Av. R	Motor program. avance rapido	Motor program. rapid advance	Moteur du progr.avance rapide	Motor Programmiervorrich. Betrieb	Motore programmatore avanzamento rapido	程序电机. 高速高级
M1	Micro programador marcha	Micro programmer on	Micro du programm. de marche	Motor Programmiervorrich. Waschen	Micro programma. di funzionamento	微程序 开
M2	Micro programador lavado	Micro programmer wash	Micro du programm. de lavage	Motor Programmiervorrich. Spülen	Micro programmatore di lavaggio	微程序 清洗
M3	Micro programador aclarado	Micro programmer rinse	Micro du programm. de rinçage	Motor Programmiervorrich. Vorlauf	Micro programmatore di risciacquo	微程序 喷淋
M4, M5	Micro programador avance	Micro programmer advance	Micro du programm. avance	Motor Programmiervorrich. schneller Vorlauf	Micro programmatore avanzamento	微程序 高级
P1, P3	Presostato	Pressure switch	Pressostat	Druckwächter	Pressostato	压力开关
P2	Presostato limitador	Hi-limit pressure switch	Pressostat de securité	Begrenzer Druckwächter	Pressostato limitatore	高水位限制 压力开关
R	Rele de Generador de A.C.	Generator relay	Relais du Generateur	Relais Generator	Rele Generatore	热水供应器继电器
RG	Rele General	Main Relay		Stromversorgungsanschluß Gener.		
Ⓛ1 Ⓛ2 Ⓛ3 Ⓝ	Alimentac. Generador A.C.	Water heater feeding	Alimentation generateur		Alimentazione generatore	热水供应器电源线
RC	Resistencia calderin	Boiler heating element	Resistance surchauffeur	Heizwiderstand Boiler	Resistenza boiler	升温箱加热管
RT	Resistencia tanque	Tank heater	Resistance cuve	Heizwiderstand Tank	Resistenza serbatoio	水箱加热管
Tt	Termostato tanque	Tank thermostat	Thermostat de cuve	Thermostat Tank	Termostato serbatoio	水箱温控器
TC	Termostato calderin	Boiler thermostat	Thermostat surchauffeur	Thermostat kessel	Termostato boiler	升温箱温控器
Tst	Limitador tanque	Tank limiter	Limitateur de cuve	Begrenzer Tank	Limitatore serbatoio	水箱安全温控器
TSC	Limitador calderin	Boiler Hi-limit	Limiteur surchauffeur	Begrenzer Boiler	Limitatore boiler	升温箱安全温控器
TSTP	Termostato termo-stop	Termo-stop Thermostat	Thermostat Termo-stop	Thermostat Termo-stop	Termostato Termo-stop	温度停止温控器
V	Electrovalvula llenado y aclarado	Fill and rinse valve	Electrovan. remplissage rinçage	Elektroventil Füllen und Spülen	Elettroval. riempimento e risciacquo	电磁阀
Vf	Electrovalvula Aclarado Frio	Cold Water rinse valve				
VR1, VR2, VR3, BR	Electrovalvula Descalcificacion	Soft Water valve				
VE,	Ventilador cuadro electrico	Switchboard fan	Ventilateur tableau electrique	Schalttafelventilator	Ventilatore quadro elettrico	风机
HRS	Sistema recuperacion energia	Heat Recovery System				
COLOR	COLORES	COLOUR	COULEURS	FARBEN	COLORE	颜色
a = BLU =	Azul	Blue	Bleu	Blau	Blu	蓝
am = YEL =	Amarillo	Yellow	Jaune	Gelb	Giallo	黄
am/ve = YEL/GRN	Amarillo/verde	Yellow / green	Jaune / vert	Gelb/grün	Giallo/verde	黄/绿
b = WHT =	Blanco	White	Blanc	Weiß	Bianco	白
g = GRY =	Gris	Grey	Gris	Grau	Grigio	灰
m = BRN =	Marrón	Brown	Marron	Braun	Marrone	棕
n = BLK =	Negro	Black	Noir	Schwarz	Nero	黑
na = ORG =	Naranja	Orange	Orange	Orange	Arancio	橙
r = RED =	Rojo	Red	Rouge	Rot	Rosso	红
rs = PNK =	Rosa	Pink	Rose	Rosa	Roseo	粉
ve = GRN =	Verde	Green	Vert	Grün	Verde	绿
vi = PRP =	Violeta	Purple	Violet	Violett	Viola	紫

12103338