Mod./Type:	_70/... FRG...VL - _90/... FRG...VL EXTREME	cod./num.	2531750.00
		data/date:	28/08/2014

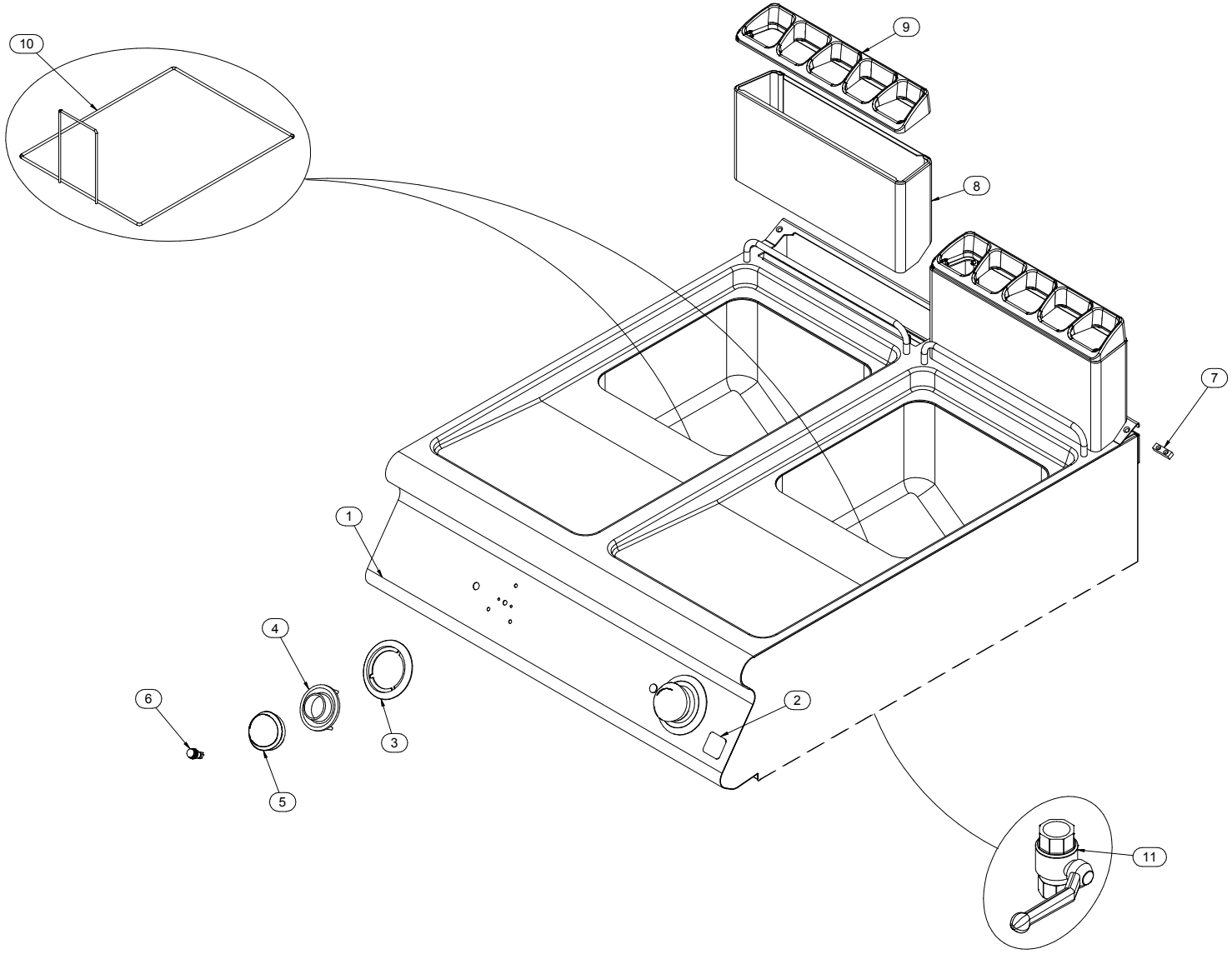

Mod./Type:	_70/... FRG...VL - _90/... FRG... VL EXTREME	cod./num.	2531752.00
		data/date:	25/07/2014

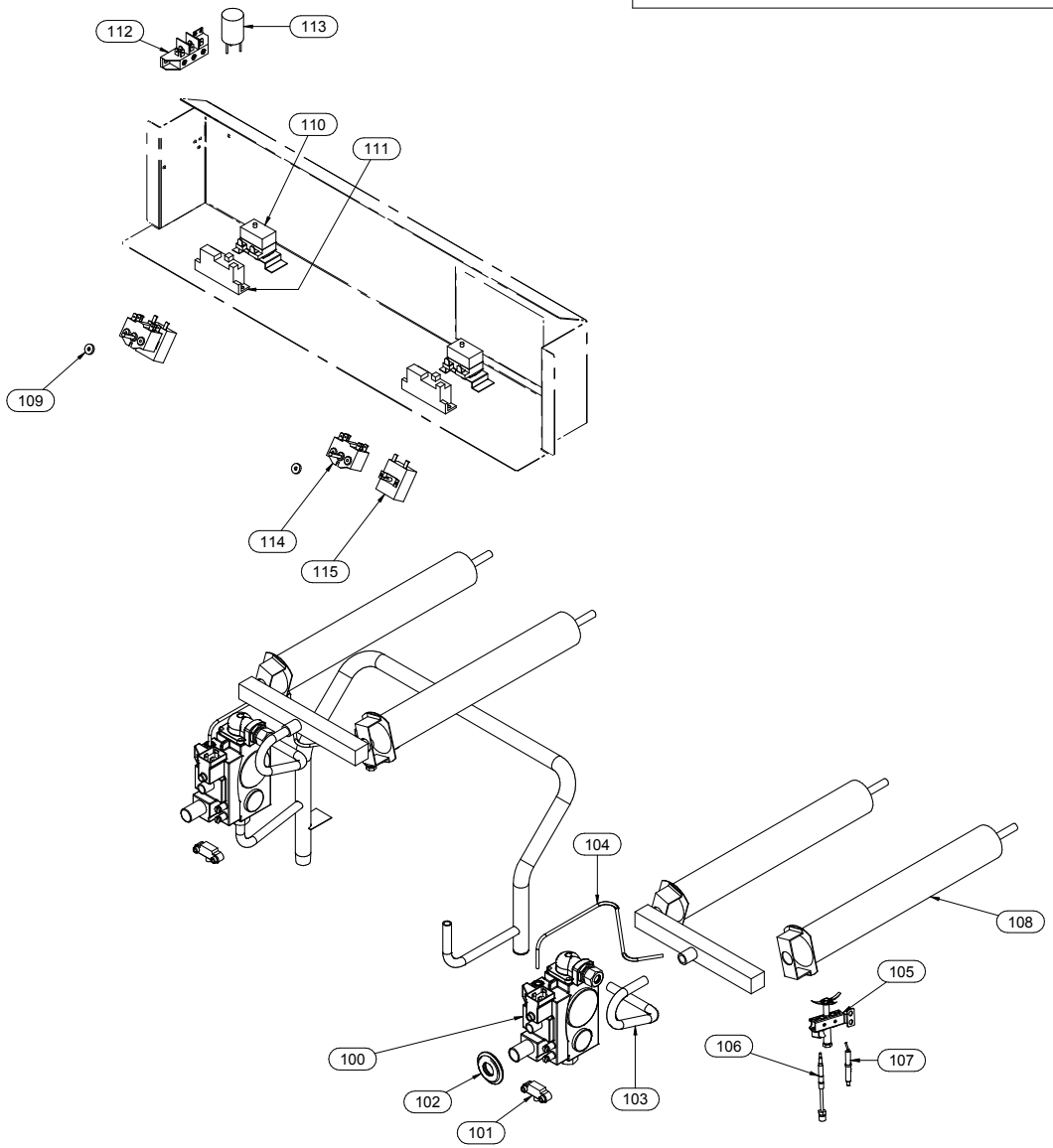

Mod./Type: **_70 - _90 .../40 ... - .../80 ... - .../120 ...**

VANO / CABINET - ...B - ...BE - ...BH2

cod./num. 2531578.00

data/date: 05/06/2014

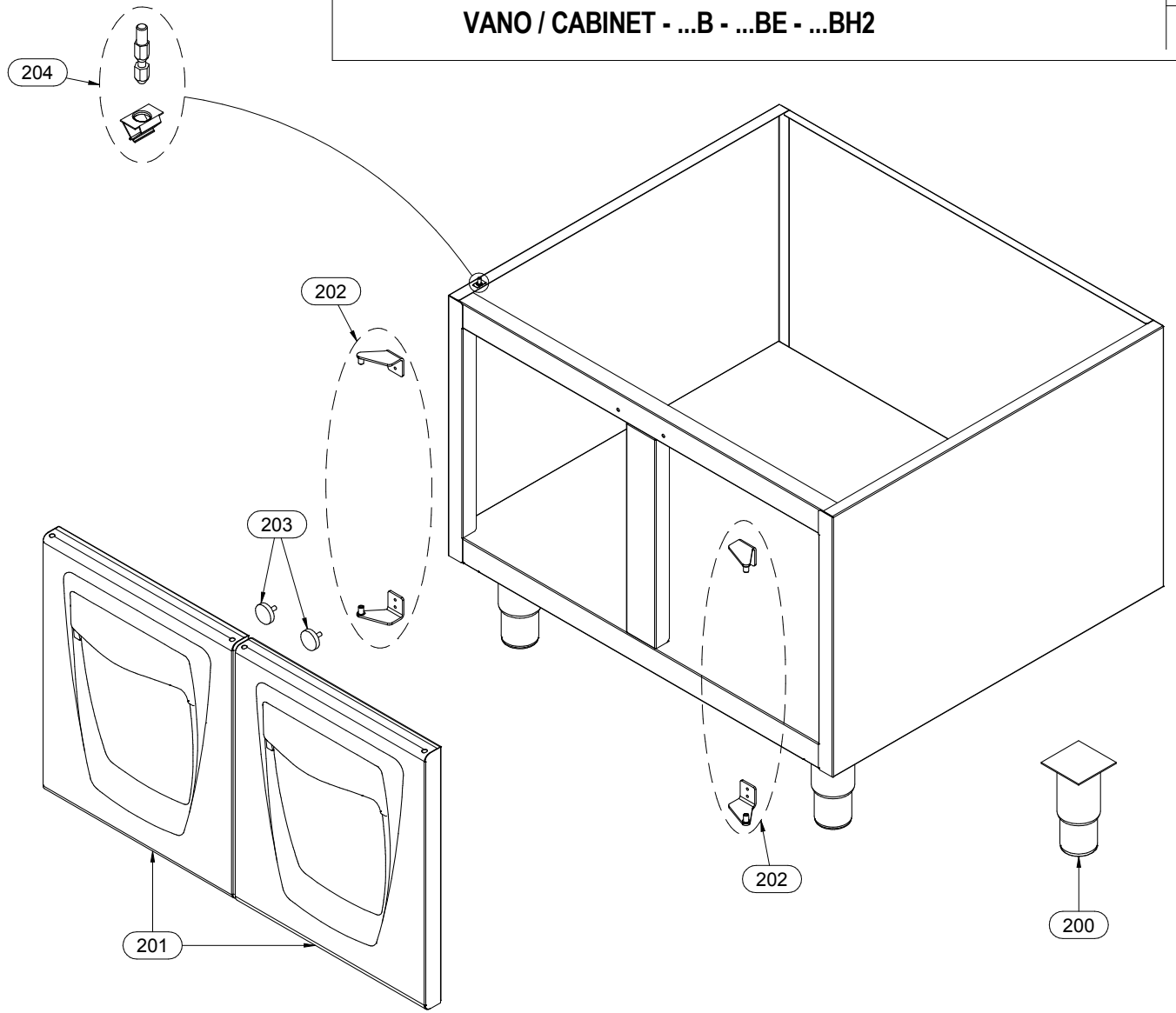

Mod.:	_70/... FRG...VL _90/... FRG...VL			cod. / num. 2531751.00 data / date 28/08/2014 rif. / ref. 2531750.00		RICAMBI CONSIGLIATI - RECOMMENDED SPARE PARTS - PIECES DETACHEES RECOMMANDÉES - EMPFOHLENEN ERSATZTEILE	EM70/40 FRG13VL	EM70/80 FRG13VL	EM70/40 FRG17VL	EM70/80 FRG17VL	EM90/40 FRG13VL	EM90/80 FRG13VL	EM90/40 FRG17VL	EM90/80 FRG17VL	EM90/40 FRG21VL	EM90/80 FRG21VL	NOTE	
POS.	DESCRIZIONE	DESCRIPTION	DENOMINATION	BENENNUNG	COD.		Q. ty											
1	CRUSCOTTO	CONTROL PANEL	BANDEAU	BEDIENBLENDE	6111165.13		1		1		1		1		1			
					6111166.13			1		1		1		1		1		
2	MARCHIO	BRAND NAME	MARQUE	MARKENZEICHEN	982.021.00		1	1	1	1	1	1	1	1	1	1	FROM: 15.12.2011	TO: 31.01.2014
					982.023.00		1	1	1	1	1	1	1	1	1	1	FROM: 01.02.2014	TO:...
3	SERIGRAFIA	SCREEN PRINT	SÉRIGRAPHIE	SIEBDRUCK	910.174.00		1	2	1	2	1	2	1	2	1	2		
4	LABIRINTO	LABYRINTH	LABYRINTHE	LABYRINTH	256.235.00		1	2	1	2	1	2	1	2	1	2		
5	MANOPOLA	KNOB	BOUTON	DREHKNOPF	256.234.00	*	1	2	1	2	1	2	1	2	1	2		
6	LAMPADA SPIA ARANCIO	ORANGE INDICATOR LIGHT	LAMPE TEMOIN ORANGE	ORANGE KONTROLLAMPE	963.013.00		1	2	1	2	1	2	1	2	1	2		
7	PIASTRINA GIUNZIONE	FIXING PLATE	PLAQUETTE FIXAGE	BEFESTIGUNGSPLATTE	941.130.00		1	1	1	1	1	1	1	1	1	1		
8	CAMINO	CHIMNEY	CHEMINÉE	KAMIN	256.309.00		1	2	1	2	1	2	1	2	1	2		
9	GRIGLIA CAMINO	FLUE GRIDDLE	GRILLE POUR CHEMINÉE	KAMINROST	982.014.00		1	2	1	2	1	2	1	2	1	2		
10	FILTRO	FILTER	FILTER	FILTER	683.096.00		1	2			1	2						
					983.048.00				1	2			1	2				
					983.045.00										1	2		
11	VALVOLA	VALVE	SOUPAPE	VENTIL	678.007.00		1	2	1	2	1	2	1	2	1	2		
12																		
13																		
14																		
15																		
16																		
17																		
18																		
19																		
20																		
21																		
22																		
23																		
24																		
25																		
26																		
27																		
28																		
29																		
30																		
31																		
32																		
33																		
34																		
35																		
36																		
37																		
38																		
39																		
40																		
41																		

Mod.:	_70/... FRG...VL - _90/... FRG...VL EXTREME			cod. / num. 2531753.00 data / date 25/07/2014 rif. / ref. 2531752.00		_70/40 FRG13VL	_70/80 FRG13VL	_70/40 FRG17VL	_70/80 FRG17VL	_90/40 FRG13VL	_90/80 FRG13VL	_90/40 FRG17VL	_90/80 FRG17VL	_90/40 FRG21VL	_90/80 FRG21VL	NOTE	
POS.	DESCRIZIONE	DESCRIPTION	DENOMINATION	BENENNUNG	COD.	Q. ty											
100	VALVOLA GAS	GAS VALVE	SOUPAPE GAZ	GAS VENTIL	256.331.00	1	2	1	2	1	2	1	2	1	2		
101	IMPULSO ACCENSIONE	IGNITION PULSE	IMPULSION ALLUMAGE	EINSCHALTEN DRÜCK-TASTE	968.501.00	1	2	1	2	1	2	1	2	1	2		
102	GUARNIZIONE	WASHER	GUARNITURE	DICHTUNGSRING	953.018.00	1	2	1	2	1	2	1	2	1	2		
103	TUBO GAS	GAS PIPE	TUBE GAZ	GASROHR	256.327.00	1	2										
					256.328.00			1	2								
					256.359.00					1	2						
					256.360.00							1	2				
					256.361.00									1	2		
104	TUBO GAS	GAS PIPE	TUBE GAZ	GASROHR	256.329.00	1	2										
					256.330.00			1	2							FROM: 15.12.2011	TO: 24.10.2013
					256.330.13			1	2							FROM: 25.10.2013	TO:...
					256.362.00					1	2						
					256.363.00							1	2			FROM: 15.12.2011	TO: 24.10.2013
					256.363.13							1	2			FROM: 25.10.2013	TO:...
					256.364.00									1	2	FROM: 15.12.2011	TO: 24.10.2013
					256.364.13									1	2	FROM: 25.10.2013	TO:...
105	GRUPPO PILOTA	PILOT GROUP	GROUPE VEILLEUSE	ZÜNDBRENNER GRUPPE	672.172.00	1	2	1	2	1	2	1	2	1	2		
106	TERMOCOPPIA	THERMOCOUPLE	THERMOCOUPLE	THERMOELEMENT	6101082.00	1	2	1	2	1	2	1	2	1	2		
107	CANDELA ACCENSIONE	IGNITION ELECTRODE	BOUGIE D'ALLUMAGE	KERZE SCHNELLBRENNER	672.060.00	1	2	1	2	1	2	1	2	1	2		
108	BRUCIATORE	BURNER	BRULEUR	BRENNER	672.175.00	2	4	2	4	2	4	2	4				
					972.045.00									2	4		
109	GUARNIZIONE	WASHER	GUARNITURE	DICHTUNGSRING	953.020.00	1	2	1	2	1	2	1	2	1	2		
110	TERMOSTATO SICUREZZA	SAFETY THERMOSTAT	THERMOSTAT DE SECURITÉ	TEMPERATURBEGRENZER	961.035.00	1	2	1	2	1	2	1	2	1	2		
111	ACCENDITORE	ELECTRONIC LIGHTER	ALLUMEUR ELECTRONIQUE	ELEKTRONISCHER ZUENDER	661.118.00	1	2	1	2	1	2	1	2	1	2		
112	MORSETTIERA	TERMINAL BOARD	BORNES	KLEMMENBRETT	M566050000	1	1	1	1	1	1	1	1	1	1		
113	FILTRO ANTIDISTURBO	LIMITER FILTER	FILTRE DE BRUIT	ANTIJAMMING FILTER	464.067.00	1	1	1	1	1	1	1	1	1	1		
114	COMMUTATORE	CHANGE-OVER SWITCH	COMMUTATEUR	UMSCHALTER	661.093.00	1	2	1	2	1	2	1	2	1	2		
115	TERMOSTATO	THERMOSTAT	THERMOSTAT	THERMOSTAT	961.034.00	1	2	1	2	1	2	1	2	1	2		
116																	
117																	
118																	
119																	
120																	
121																	
122																	
123																	
124																	
125																	
126																	
127																	

Mod.:	_70/... - _90/… VANO / CABINET …B - …BE - …BH2			cod. / num. 2531579.00 data / date 05/06/2014 rif. / ref. 2531578.00		RICAMBI CONSIGLIATI - RECOMMENDED SPARE PARTS - PIÈCES DÉTACHÉES RECOMMANDÉES - EMPFOHLENEN ERSATZTEILE	EM70/40 ...	EM70/80 ...	EM70/120 ...	EM90/40 ...	EM90/80 ...	EM90/120 ...	NOTE	
POS.	DESCRIZIONE	DESCRIPTION	DENOMINATION	BENENNUNG	COD.		Q. ty							
200	PIEDINO	FOOT	PIED	STELLFUSS	912.090.00		4	4	4	4	4	4	FROM: 15.12.2011	TO: 17.05.2013
					912.090.14		4	4	4	4	4	4	FROM: 18.05.2013	TO:...
201	PORTA	DOOR	PORTE	TÜR	256.215.00		1	2	3	1	2	3		
202	COPPIA CERNIERE	GASKETS PAIR	COUPLE CHARNIÈRES	SCHARNIERPAAR	256.216.00		1	2	3	1	2	3		
203	MAGNETE	MAGNET	MAGNÉTO	MAGNET	684.007.00		1	2	3	1	2	3	FROM: 15.12.2011	TO: 01.01.2014
					984.006.00		1	2	3	1	2	3	FROM: 02.01.2014	TO:...
204	FISSAGGIO	FIXING	FIXAGE	BEFESTIGUNG	256.431.00		4	4	4	4	4	4	FROM: 04.05.2015	TO:...
205														
206														
207														
208														
209														
210														
211														
212														
213														
214														
215														
216														
217														
218														
219														
220														
221														
222														
223														
224														
225														
226														
227														
228														
229														
230														
231														
232														
233														
234														