SAGI - BASE REFRIGERATA 530 lt,prof.70 cm, -2/+8°C
KIRC2 - 26-10-2005 » 01-11-2005

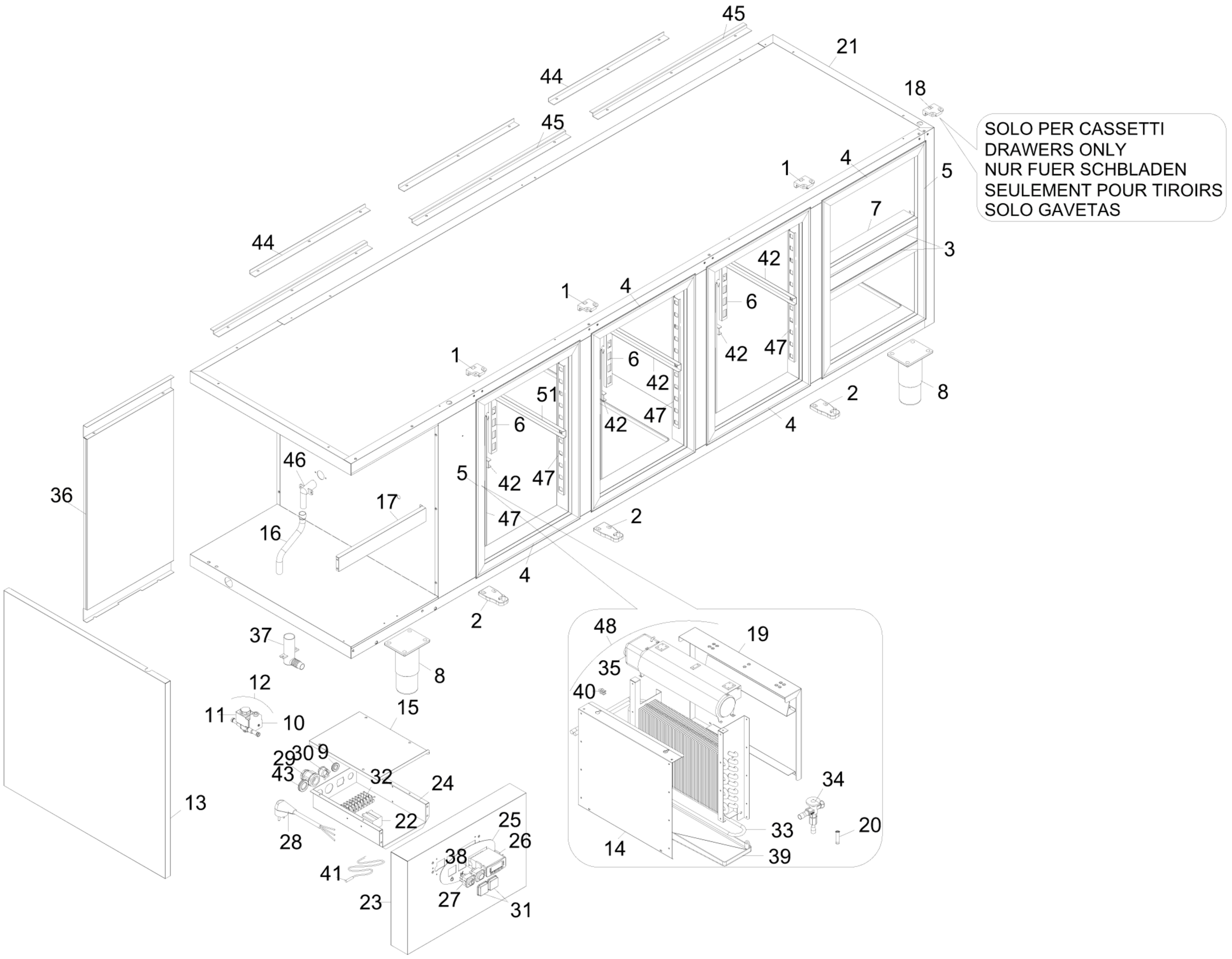

SAGI - BASE REFRIGERATA 530 lt,prof.70 cm, -2/+8°C
KIRC2 - A000350 - GRUPPO PORTE-CASSETTI - 26-10-2005 » 01-11-2005

Modello Typ Model Modele Modelo

		KIRA KIRAA KIRAM KIRAB KIRABA KIRABM	KIRA2 KIRA2A KIRA2M	KIRB KIRBA KIRBM KIRBB KIRBBA KIRBBM	KIRB2 KIRB2A KIRB2M	KIRB4 KIRB4A KIRB4M	KIRC KIRCA KIRCM KIRCB KIRCBA KIRCBM	KIRC2 KIRC2A KIRC2M	KIRC4 KIRC4A KIRC4M
Num.cassetti Schublad Drawers Tiroirs Gabetas	1/2 1/2SUP 1/2INF	1 - -	1 1 1	1 - -	1 1 1	1 2 2	1 - -	1 1 1	1 2 2
Porte Türen Doors Portes Puertas		2	1	3	2	1	4	3	2

