/A=PIANO CON ALZATINA
/A=SHELF+ RIDGE
/A=PLATTE MIT RUECKLEISTE
/A=RAYON AVEC ETAGERE
/A=TOPE CON ELEV.

/X=PIANO SENZA ALZATINA
/X=SHELF WITHOUT RIDGE
/X=PLATTE OHNE RUECKLEISTE
/X=RAYON SANS ETAGERE
/X=TOPE SIN ELEV

SOLO PER CASSETTI
DRAWERS ONLY
NUR FUER SCHUBLADEN
SEULEMENT POUR TIROIRS
SOLO GAVETAS

Modello Typ Model Modele Modelo

		TM1A TM1A/X TM1A/A	TM1A/2 TM1A/2X TM1A/2A	TM1A/11 TM1A/11X TM1A/11A	TM1A/3 TM1A/3X TM1A/3A	TM1B TM1B/X TM1B/A	TM1B/2 TM1B/2X TM1B/2A	TM1B/4 TM1B/4X TM1B/4A	TM1B/11 TM1B/11X TM1B/11A	TM1B/22 TM1B/22X TM1B/22A	TM1B/3 TM1B/3X TM1B/3A
Num. Cassetti Schublad Drawers Tiroirs Gabetas	1/2	---	2	---	---	---	2	4	---	---	---
	1/3	---	---	1	3	---	---	---	1	2	3
	2/3	---	---	1	---	---	---	---	1	2	---

		TM1C TM1C/X TM1C/A	TM1C/2 TM1C/2X TM1C/2A	TM1C/4 TM1C/4X TM1C/4A	TM1C/6 TM1C/6X TM1C/6A	TM1C/11 TM1C/11X TM1C/11A	TM1C/22 TM1C/22X TM1C/22A	TM1C/33 TM1C/33X TM1C/33A	TM1C/3 TM1C/3X TM1C/3A
Num. Cassetti Schublad Drawers Tiroirs Gabetas	1/2	---	2	4	6	---	---	---	---
	1/3	---	---	---	---	1	2	3	3
	2/3	---	---	---	---	1	2	3	---

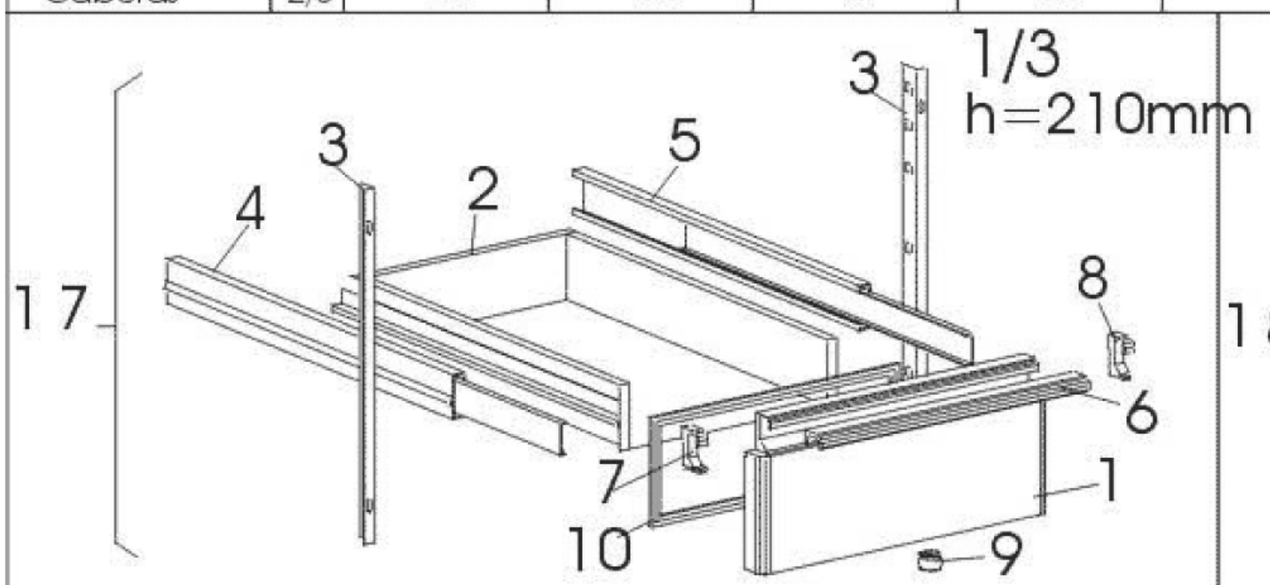

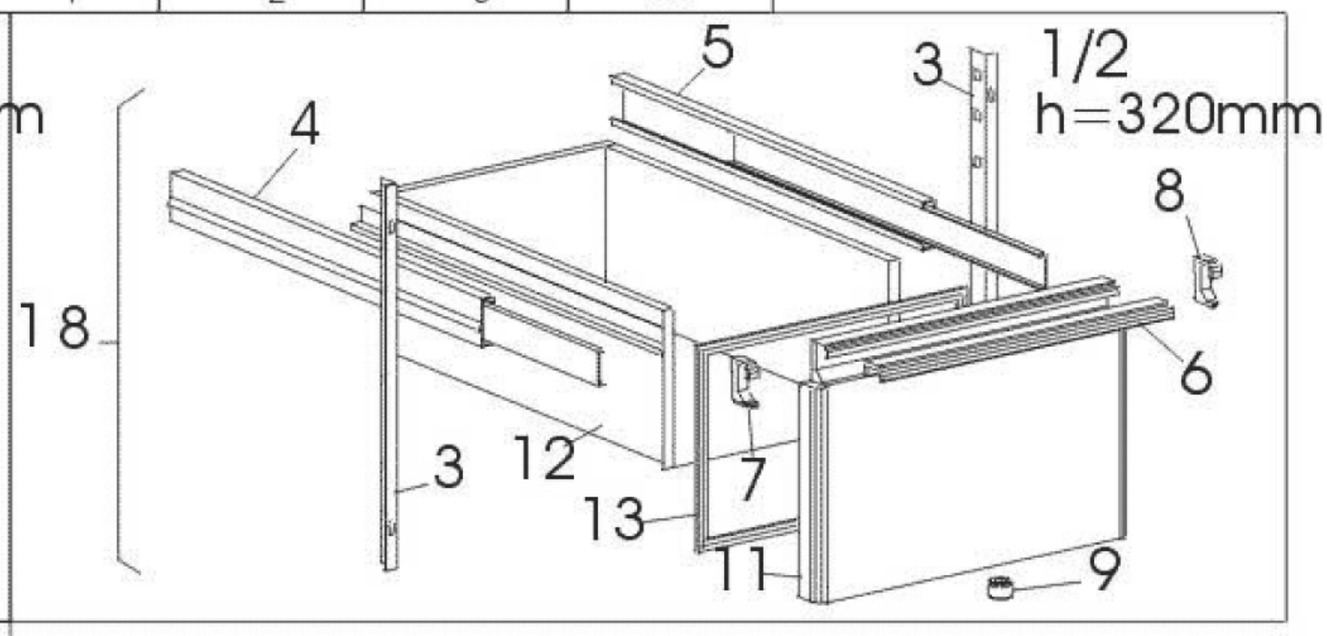

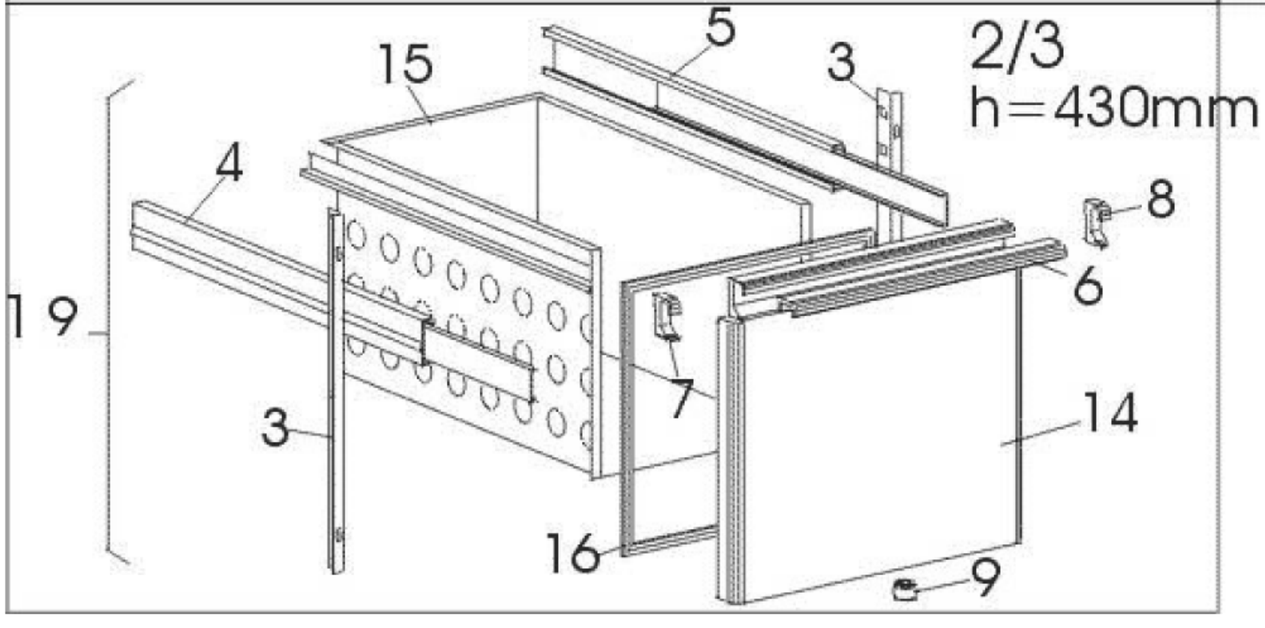

Modello Typ Model Modele Modelo

		TM1A TM1A/X TM1A/A	TM1A/2 TM1A/2X TM1A/2A	TM1A/11 TM1A/11X TM1A/11A	TM1A/3 TM1A/3X TM1A/3A	TM1B TM1B/X TM1B/A	TM1B/2 TM1B/2X TM1B/2A	TM1B/4 TM1B/4X TM1B/4A	TM1B/11 TM1B/11X TM1B/11A	TM1B/22 TM1B/22X TM1B/22A
Porte Ture Doors Portes Portas Gabetas	SX DX	1 1	1 ---	1 ---	1 ---	2 1	2 ---	1 ---	2 ---	1 ---
		TM1B/3 TM1B/3X TM1B/3A	TM1C TM1C/X TM1C/A	TM1C/2 TM1C/2X TM1C/2A	TM1C/4 TM1C/4X TM1C/4A	TM1C/6 TM1C/6X TM1C/6A	TM1C/11 TM1C/11X TM1C/11A	TM1C/22 TM1C/22X TM1C/22A	TM1C/33 TM1C/33X TM1C/33A	TM1C/3 TM1C/3X TM1C/3A
Porte Ture Doors Portes Portas Gabetas	SX DX	2 ---	3 1	3 ---	2 ---	1 ---	3 ---	2 ---	1 ---	3 ---

SX

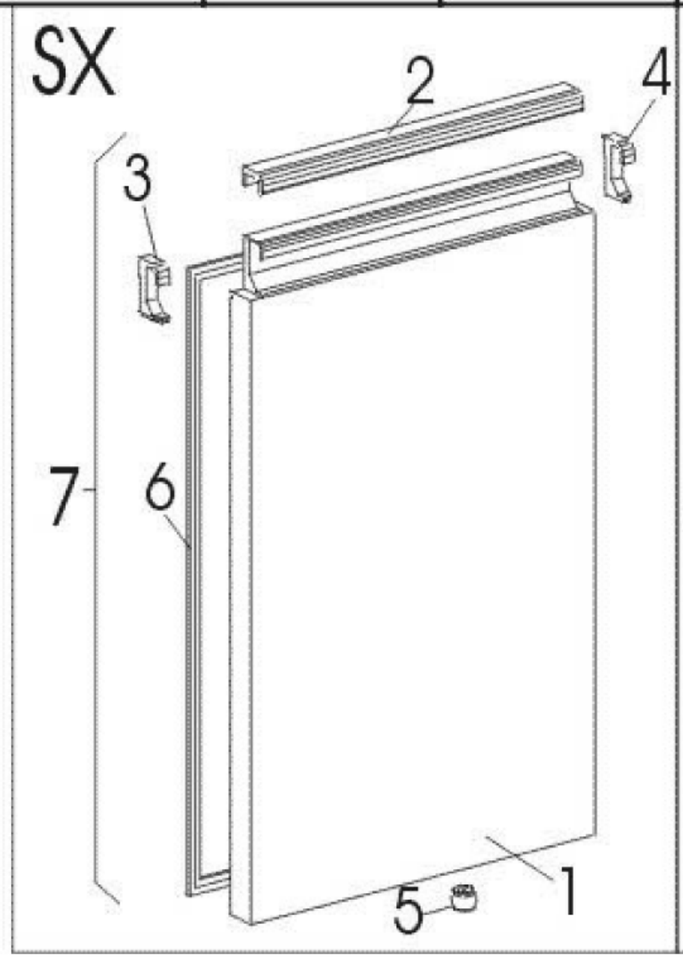

DX

