SAGI - BANCHI ATTREZZATI PER PIZZA
KPZ1633A - 18-05-2000 » 22-11-2001

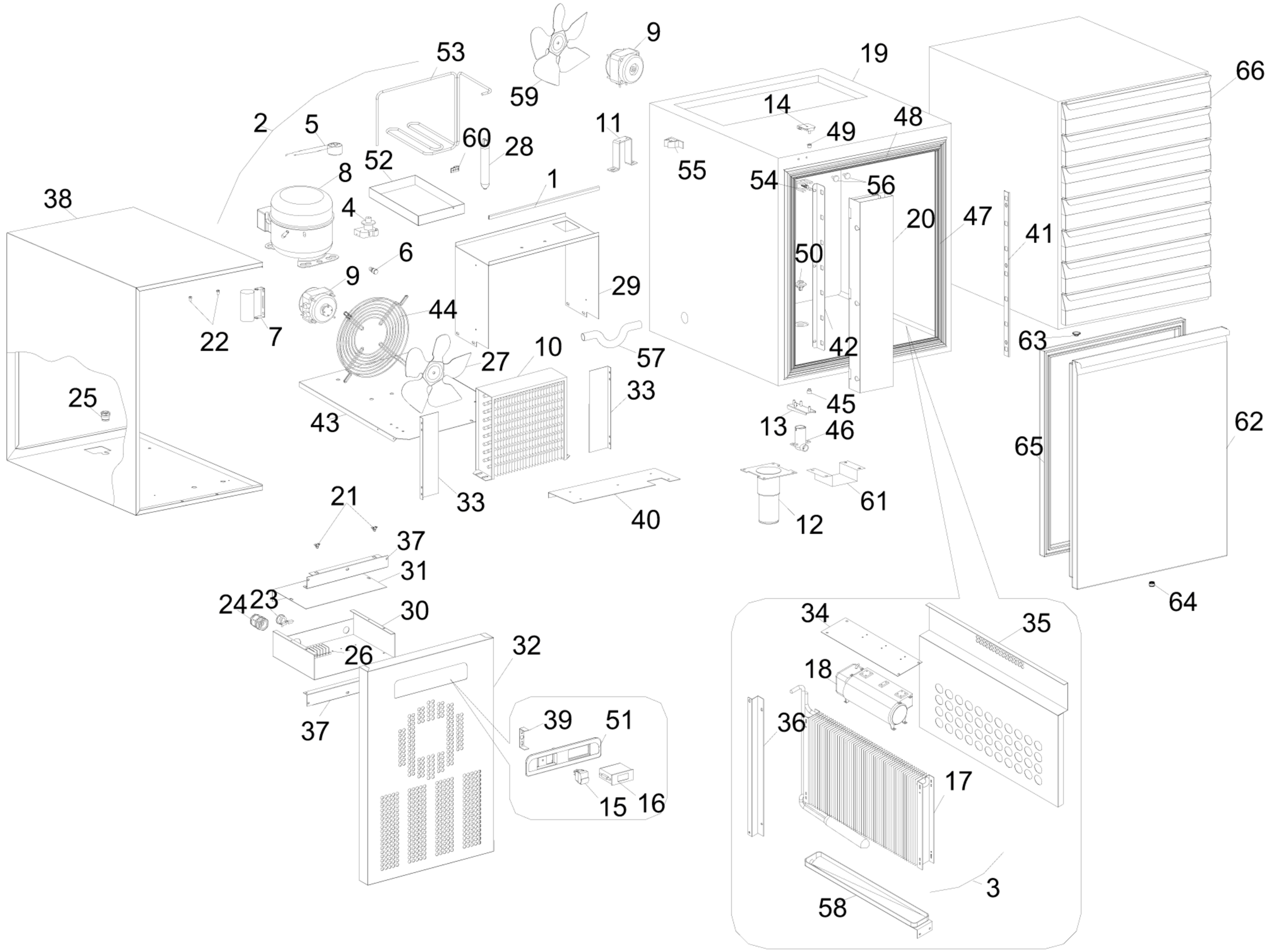

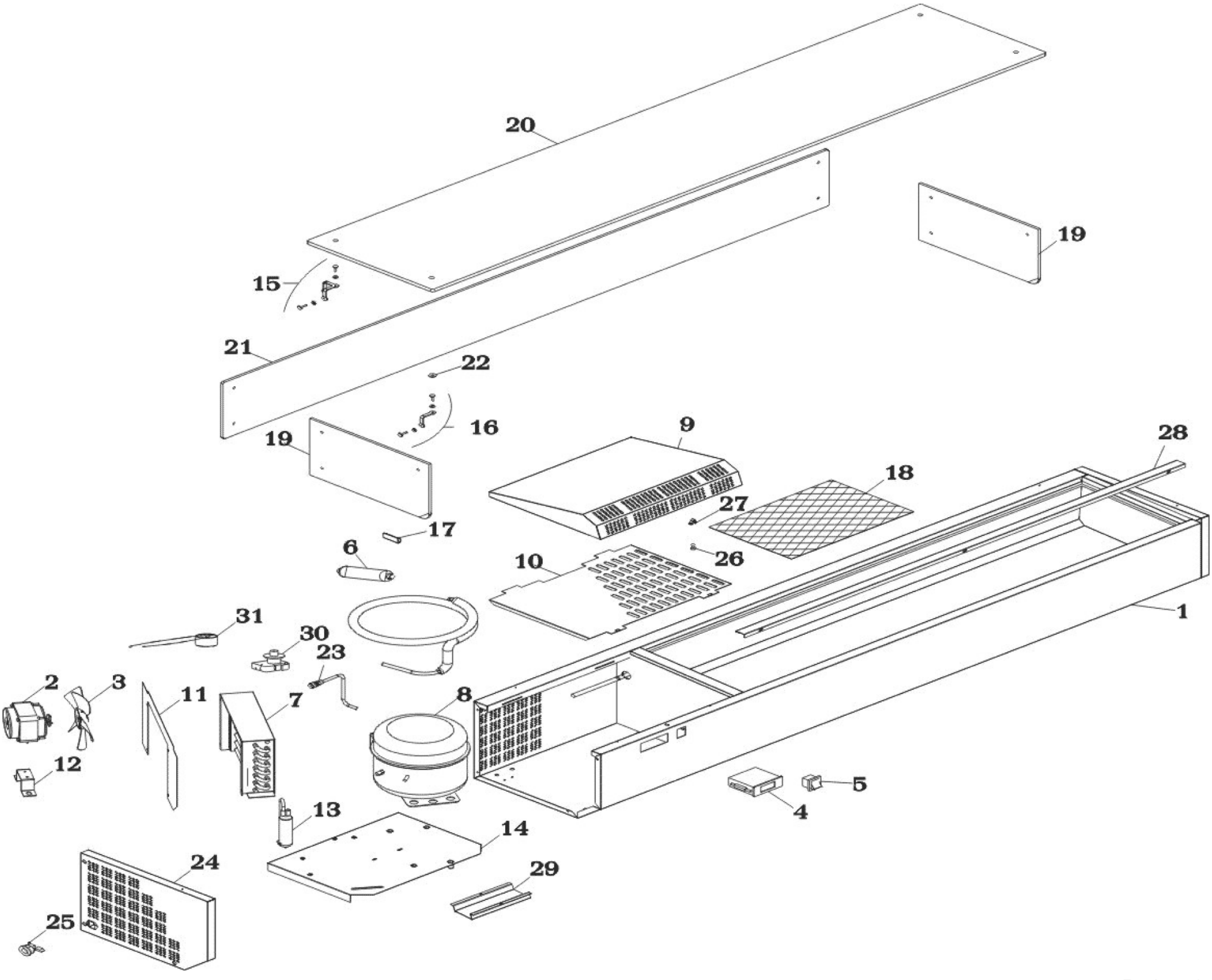
20
19
15
21
22
16
19
9
28
18
27
17
6
26
10
1
31
30
23
2
3
11
7
8
12
13
14
5
4
24
29
25