DESPIECE TECNICO

# Hornos Mixtos Gas
# Fours Mixtes á Gaz
# Combined Gas Ovens
# Gas-Konvektionsöfen
# Forni Misti a Gas

## SERIE "EVOLUTION"

**Modelos:**

**HGC-10/21**

*Febrero 2005 February*

FAGOR

Fagor Industrial

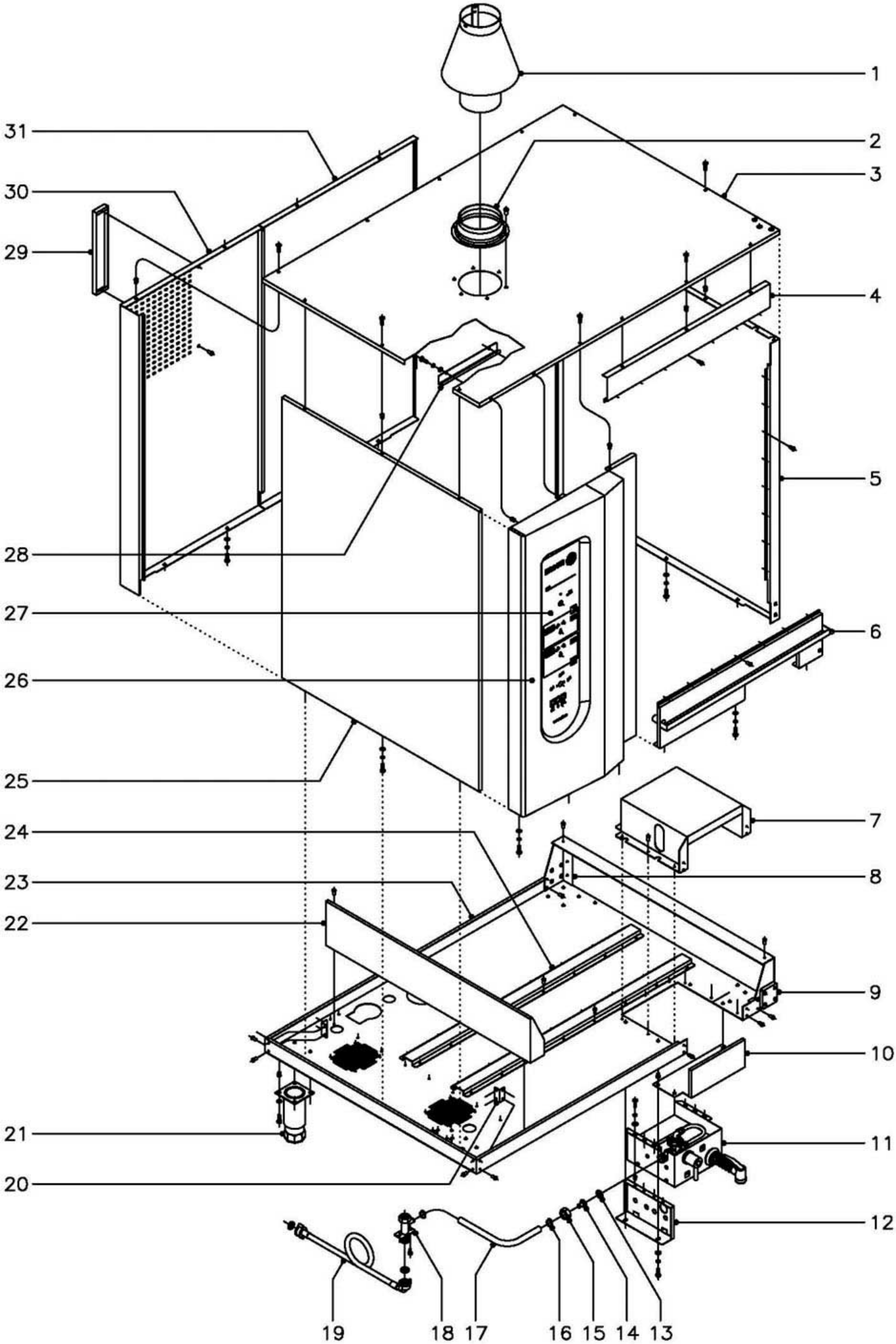


| N plano | Firma | Fecha | Aparato | Lamina | |
|---|---|---|---|---|---|
| C–1617 | | 2–2005 | MUEBLE<br>HORNO A GAS HGC–10/21 | 1 | Fagor Industrial S.Coop.<br>Oñate |

| MOD. | HORNOS A GAS | ZONA | MUEBLE | PLANO | C-1617 |
|---|---|---|---|---|---|

| ITEM | CODIGO | DENOMINACION | TEXTO | HGC-10 / 21 | | | | | | | | | NOTAS |
|---|---|---|---|---|---|---|---|---|---|---|---|---|---|
| 1 | R272612 | Chimenea | Chimney | 1 | | | | | | | | | |
| | R292646 | Conducto humos | Smoke conduct | 1 | | | | | | | | | |
| | R272614 | Soporte chimenea | Chimney holder | 3 | | | | | | | | | |
| | Q412002 | Remache tubular Ø4x7,5 | Tubular rivet Ø4x7.5 | 9 | | | | | | | | | |
| 2 | R292645 | Guia chimenea | Chimney guide | 1 | | | | | | | | | |
| | Q412002 | Remache tubular Ø4x7,5 | Tubular rivet Ø4x70.5 | 6 | | | | | | | | | |
| 3 | T342800 | Panel superior exterior | Outer upper panel | 1 | | | | | | | | | |
| | Q221342 | Remache exagonal M-5 | Hexagonal rivet M-5 | 13 | | | | | | | | | |
| | Q152004 | Tornillo aplastado M-5x13 | Flat screw M-5x13 | 13 | | | | | | | | | |
| 4 | T302804 | Panel anterior superior | Upper front panel | 1 | | | | | | | | | |
| | Q412002 | Remache tubular Ø4x7,5 | Tubular rivet Ø4x7.5 | 7 | | | | | | | | | Amarre a cuba |
| 5 | T302803 | Panel exterior derecho | Right outer panel | 1 | | | | | | | | | |
| | Q012042 | Tornillo exagonal M-6x15 | Hexagonal screw M-6x15 | 3 | | | | | | | | | Amarre inferior |
| | Q262040 | Arandela grower A-6 | Grower washer A-6 | 3 | | | | | | | | | Amarre inferior |
| | Q232040 | Arandela plana A-6 | Flat washer A-6 | 3 | | | | | | | | | Amarre inferior |
| | Q221343 | Remache exagonal M-6 | Hexagonal rivet M-6 | 3 | | | | | | | | | Amarre inferior |
| | Q412002 | Remache tubular Ø4x7,5 | Tubular rivet Ø4x7.5 | 7 | | | | | | | | | Amarre a cuba |
| 6 | T302800 | Recogeaguas completo | Complete water collector | 1 | | | | | | | | | |
| | Q012042 | Tornillo exagonal M-6x15 | Hexagonal screw M-6x15 | 3 | | | | | | | | | Amarre inferior |
| | Q262040 | Arandela grower A-6 | Grower washer A-6 | 3 | | | | | | | | | Amarre inferior |
| | Q232040 | Arandela plana A-6 | Flat washer A-6 | 3 | | | | | | | | | Amarre inferior |
| | Q221343 | Remache exagonal M-6 | Hexagonal rivet M-6 | 3 | | | | | | | | | Amarre inferior |
| | Q412002 | Remache tubular Ø4x7,5 | Tubular rivet Ø4x7.5 | 7 | | | | | | | | | Amarre a cuba |
| 7 | T302830 | Alojamiento ducha | Shower housing | 1 | | | | | | | | | |
| | Q412002 | Remache tubular Ø4x7,5 | Tubular rivet Ø4x7.5 | 13 | | | | | | | | | Amarre a base |
| 8 | T302816 | Refuerzo apoyo base posterior | Rear base reinforcement | 1 | | | | | | | | | |
| | Q412002 | Remache tubular Ø4x7,5 | Tubular rivet Ø4x7.5 | 6 | | | | | | | | | Amarre a base |
| 9 | T302836 | Refuerzo apoyo base anterior com. | Com. front base holder rein | 1 | | | | | | | | | |
| | Q412002 | Remache tubular Ø4x7,5 | Tubular rivet Ø4x7.5 | 6 | | | | | | | | | Amarre a base |

| MOD. | HORNOS A GAS | ZONA | MUEBLE | PLANO | C-1617 |
|---|---|---|---|---|---|

| ITEM | CODIGO | DENOMINACION | TEXTO | HGC-10 / 21 | | | | | | | | | NOTAS |
|---|---|---|---|---|---|---|---|---|---|---|---|---|---|
| 10 | T342805 | Cubierta de ducha | Shower cover | 1 | | | | | | | | | |
| | Q012042 | Tornillo exagonal M-6x15 | Hexagonal screw M-6x15 | 3 | | | | | | | | | Amarre a base |
| | Q262040 | Arandela grower A-6 | Grower washer A-6 | 3 | | | | | | | | | Amarre a base |
| | Q232040 | Arandela plana A-6 | Flat washer A-6 | 3 | | | | | | | | | Amarre a base |
| | Q221343 | Remache exagonal M-6 | Hexagonal rivet M-6 | 3 | | | | | | | | | Amarre a base |
| | | | | | | | | | | | | | |
| | **1100002860** | **KIT DUCHA HORNO 10 / 21** | **OVEN SHOWER KIT 10 / 2** | **1** | | | | | | | | | **Bajo pedido** |
| 11 | Z279506 | Grupo ducha mini | Mini shower group | 1 | | | | | | | | | Componente kit |
| | Q152004 | Tornillo aplastado M-5x13 | Flat screw M-5x13 | 6 | | | | | | | | | Componente kit |
| | Q262030 | Arandela grower A-5 | Grower washer A-5 | 6 | | | | | | | | | Componente kit |
| | Q232030 | Arandela plana A-5 | Flat washer A-5 | 6 | | | | | | | | | Componente kit |
| | Q221342 | Remache exagonal M-5 | Hexagonal rivet M-5 | 6 | | | | | | | | | Componente kit |
| 12 | T302831 | Amarre ducha | Shower anchoring | 2 | | | | | | | | | Componente kit |
| | Q012042 | Tornillo exagonal M-6x15 | Hexagonal screw M-6x15 | 3 | | | | | | | | | Componente kit |
| | Q262040 | Arandela grower A-6 | Grower washer A-6 | 3 | | | | | | | | | Componente kit |
| | Q232040 | Arandela plana A-6 | Flat washer A-6 | 3 | | | | | | | | | Componente kit |
| | Q221343 | Remache exagonal M-6 | Hexagonal rivet M-6 | 3 | | | | | | | | | Componente kit |
| 13 | Q306039 | Arandela junta Ø25xØ16,1x1,5 | Joint washer Ø25xØ8.5x1.5 | 1 | | | | | | | | | Componente kit |
| 14 | T305067 | Entrada de agua a ducha | Shower water inlet | 1 | | | | | | | | | Componente kit |
| 15 | Q222013 | Tuerca 3/4" gas | Nut 3/4" Gas | 1 | | | | | | | | | Componente kit |
| 16 | Q881302 | Abrazadera 12 - 20 | Clamp 12 - 20 | 2 | | | | | | | | | Componente kit |
| 17 | 3676900 | Tubo de goma Ø17xØ10x850 | Rubber tubing Ø17xØ10x85 | 1 | | | | | | | | | Componente kit |
| 18 | T345012 | Suplemento electrovalvula | Solenoide valve supplemen | 1 | | | | | | | | | Componente kit |
| | Q032021 | Tornillo alomado M-4x10 | Curved screw M-4x10 | 2 | | | | | | | | | Componente kit |
| | | | | | | | | | | | | | |
| 19 | Z601114 | Manguera entrada de agua | Water inlet hose | 1 | | | | | | | | | |
| | Z701132 | Filtro-junta entrada de agua | Filter-joint water inlet | 1 | | | | | | | | | |
| | Q307031 | Junta manguera Ø24xØ14x3 | Hose joint Ø24xØ14x3 | 1 | | | | | | | | | |
| | | | | | | | | | | | | | |

| MOD. | HORNOS A GAS | ZONA | MUEBLE | PLANO | C-1617 |
|---|---|---|---|---|---|

| ITEM | CODIGO | DENOMINACION | TEXTO | HGC-10 / 21 | | | | | | | | | NOTAS |
|---|---|---|---|---|---|---|---|---|---|---|---|---|---|
| 20 | T302837 | Cantonera base | Base corner protector | 2 | | | | | | | | | |
| | Q412002 | Remache tubular Ø4x7,5 | Tubular rivet Ø4x7.5 | 8 | | | | | | | | | Amarre a base |
| 21 | X260151 | Pata regulable | Ajustable leg | 4 | | | | | | | | | |
| | Q012031 | Tornillo exagonal M-5x10 | Hexagonal screw M-5x10 | 16 | | | | | | | | | |
| | Q242030 | Arandela abanico A-5 | Fan shaped washer A-5 | 16 | | | | | | | | | |
| | Q221342 | Remache exagonal M-5 | Hexagonal rivet M-5 | 16 | | | | | | | | | |
| 22 | T302815 | Apoyo cuerpo de horno | Oven body holder | 1 | | | | | | | | | |
| | Q412002 | Remache tubular Ø4x7,5 | Tubular rivet Ø4x7.5 | 13 | | | | | | | | | Amarre a base |
| 23 | T322801 | Base exterior de horno 10 / 21 | Oven outer base 10 / 21 | 1 | | | | | | | | | |
| 24 | T302818 | Refuerzo longitudinal base | Base longitudinal reinforcer | 2 | | | | | | | | | |
| | Q412002 | Remache tubular Ø4x7,5 | Tubular rivet Ø4x7.5 | 32 | | | | | | | | | Amarre a base |
| 25 | T302806 | Panel exterior izquierdo | Left outer panel | 1 | | | | | | | | | |
| | Q012042 | Tornillo exagonal M-6x15 | Hexagonal screw M-6x15 | 3 | | | | | | | | | Amarre inferior |
| | Q262040 | Arandela grower A-6 | Grower washer A-6 | 3 | | | | | | | | | Amarre inferior |
| | Q232040 | Arandela plana A-6 | Flat washer A-6 | 3 | | | | | | | | | Amarre inferior |
| | Q221343 | Remache exagonal M-6 | Hexagonal rivet M-6 | 3 | | | | | | | | | Amarre inferior |
| 26 | T322806 | Panel portamandos | Control panel | 1 | | | | | | | | | |
| | Q012042 | Tornillo exagonal M-6x15 | Hexagonal screw M-6x15 | 3 | | | | | | | | | Amarre inferior |
| | Q262040 | Arandela grower A-6 | Grower washer A-6 | 3 | | | | | | | | | Amarre inferior |
| | Q232040 | Arandela plana A-6 | Flat washer A-6 | 3 | | | | | | | | | Amarre inferior |
| | Q221343 | Remache exagonal M-6 | Hexagonal rivet M-6 | 3 | | | | | | | | | Amarre inferior |
| | Q412002 | Remache tubular Ø4x7,5 | Tubular rivet Ø4x7.5 | 8 | | | | | | | | | Amarre a cuba |
| 27 | T343001 | Serigrafia HGC-10 / 21 | Serigraphy HGC-10 / 21 | 1 | | | | | | | | | |
| 28 | T302834 | Canaleta portamandos | Control feed through | 1 | | | | | | | | | |
| | Q012042 | Tornillo exagonal M-6x15 | Hexagonal screw M-6x15 | 2 | | | | | | | | | |
| | Q262040 | Arandela grower A-6 | Grower washer A-6 | 2 | | | | | | | | | |
| | Q232040 | Arandela plana A-6 | Flat washer A-6 | 2 | | | | | | | | | |
| | Q221343 | Remache exagonal M-6 | Hexagonal rivet M-6 | 2 | | | | | | | | | |
| 29 | T302835 | Separador posterior | Rear separator | 1 | | | | | | | | | |

| MOD. | HORNOS A GAS | ZONA | MUEBLE | PLANO | C-1617 |
|---|---|---|---|---|---|

| ITEM | CODIGO | DENOMINACION | TEXTO | HGC-10 / 21 | | | | | | | | | NOTAS |
|---|---|---|---|---|---|---|---|---|---|---|---|---|---|
| | Q412002 | Remache tubular Ø4x7,5 | Tubular rivet Ø4x7.5 | 2 | | | | | | | | | |
| 30 | T322811 | Panel posterior exterior elec. | Electrical outer rear panel | 1 | | | | | | | | | |
| 31 | T302850 | Panel posterior exterior comun | Common outer rear panel | 1 | | | | | | | | | |
| | Q012042 | Tornillo exagonal M-6x15 | Hexagonal screw M-6x15 | 4 | | | | | | | | | Amarre inferior |
| | Q262040 | Arandela grower A-6 | Grower washer A-6 | 4 | | | | | | | | | Amarre inferior |
| | Q232040 | Arandela plana A-6 | Flat washer A-6 | 4 | | | | | | | | | Amarre inferior |
| | Q221343 | Remache exagonal M-6 | Hexagonal rivet M-6 | 4 | | | | | | | | | Amarre inferior |
| | | | | | | | | | | | | | |
| | | | | | | | | | | | | | |
| | | | | | | | | | | | | |

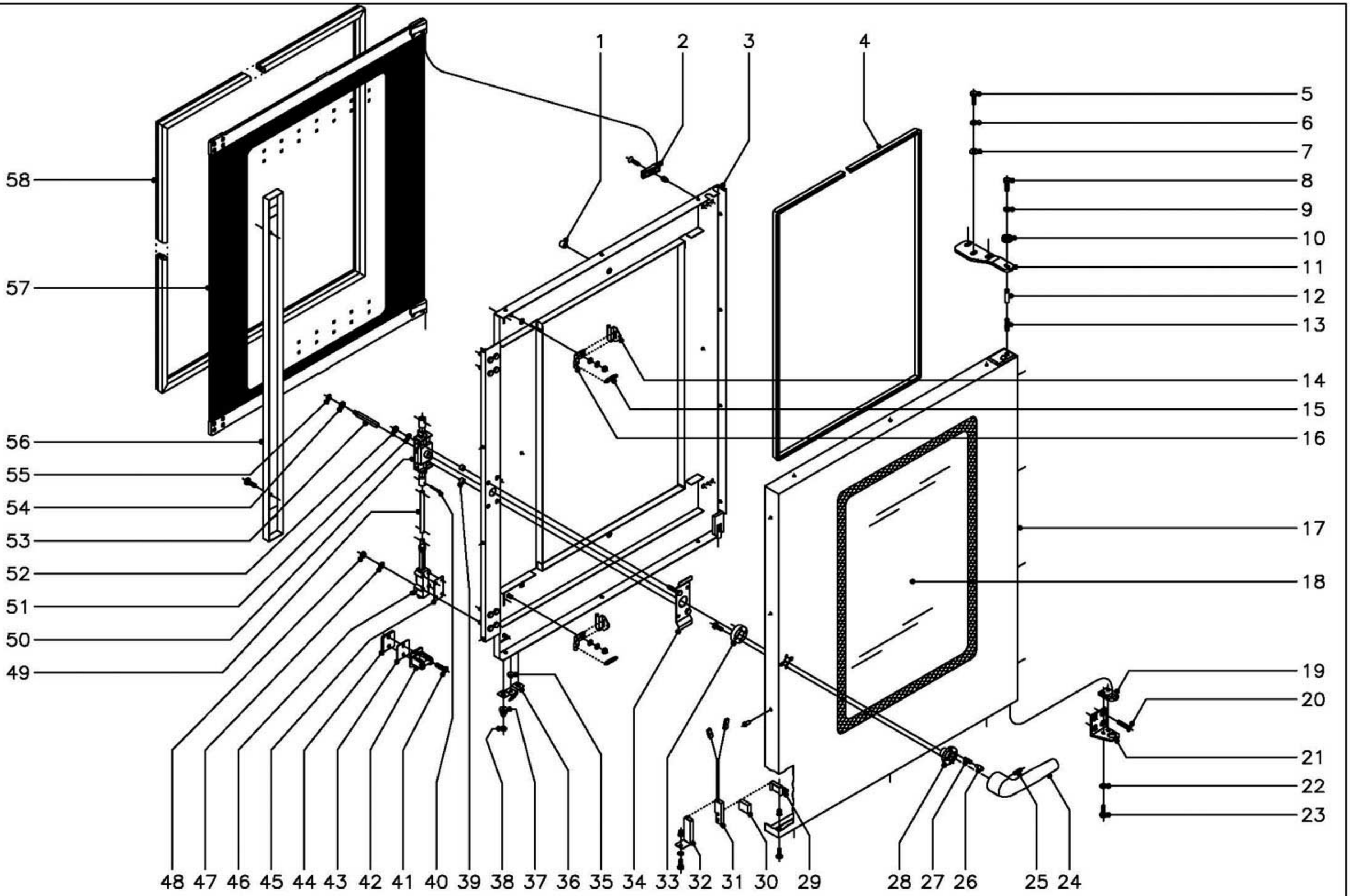


| N plano | Firma | Fecha | Aparato | Lamina | |
|---|---|---|---|---|---|
| C–1618 | | 2–2005 | PUERTA<br>HORNO A GAS HGC–10/21 | 2 | Fagor Industrial S.Coop. FAGOR<br>Onate |

| MOD. | HORNOS A GAS | ZONA | PUERTA | PLANO | C-1618 |
|---|---|---|---|---|---|

| ITEM | CODIGO | DENOMINACION | TEXTO | HGC-10 / 21 | | | | | | | | | NOTAS |
|---|---|---|---|---|---|---|---|---|---|---|---|---|---|
| **1100003101** | | **KIT Puerta completa 10/21** | **Complete door KIT 10/21** | **1** | | | | | | | | | |
| | | | | | | | | | | | | | |
| 1 | T300513 | Tope cristal interior | Inner glass door stop | 6 | | | | | | | | | |
| 2 | R670615 | Base de bisagra | Hinge base | 2 | | | | | | | | | |
| | Q042032 | Tornillo avellanado M-5x15 | Countersunk screw M-5x15 | 2 | | | | | | | | | |
| | Q222011 | Remache exagonal M-5 | Hexagonal rivet M-5 | 2 | | | | | | | | | |
| 3 | T300501 | Contrapuerta completa | Complete inner door | 1 | | | | | | | | | |
| 4 | 3715200 | Junta cristal L=2500 | Glass joint L=2500 | 1 | | | | | | | | | |
| 5 | Q012053 | Tornillo exgonal M-8x20 | Hexagonal screw M-8x20 | 3 | | | | | | | | | |
| 6 | Q242050 | Arandela abanico A-8 | Fan shaped washer A-8 | 3 | | | | | | | | | |
| 7 | Q302025 | Arandela plana Ø8,4x20x1,5 | Flat washer Ø8,4x20x1.5 | 3 | | | | | | | | | |
| 8 | Q012042 | Tornillo exagonal M-6x15 | Hexagonal screw M-6x15 | 1 | | | | | | | | | |
| 9 | Q242040 | Arandela abanico A-6 | Fan shaped washer A-6 | 1 | | | | | | | | | |
| 10 | R662807 | Arandela amarre puerta | Door anchoring washer | 1 | | | | | | | | | |
| 11 | T300520 | Bisagra superior | Upper hinge | 1 | | | | | | | | | |
| 12 | R660534 | Eje superior | Upper shaft | 1 | | | | | | | | | |
| 13 | Z850519 | Resorte | Spring | 1 | | | | | | | | | |
| 14 | T300514 | Pestillo sujecion cristal interior | Inner glass fastening latch | 2 | | | | | | | | | |
| 15 | R660605 | Muelle tensor pestillo | Latch tensor spring | 2 | | | | | | | | | |
| 16 | R670612 | Base de pestillo | Latch base | 2 | | | | | | | | | |
| | Q302022 | Arandela plana Ø16xØ6x1,2 | Flat washer Ø16xØ6x1.2 | 2 | | | | | | | | | |
| | Q242030 | Arandela abanico A-5 | Fan shaped washer A-5 | 2 | | | | | | | | | |
| | Q162030 | Tuerca exagonal M-5 | Hexagonal nut M-5 | 2 | | | | | | | | | |
| 17 | T300523 | Panel puerta completa | Complete door panel | 1 | | | | | | | | | |
| | Q412002 | Remache tubular Ø4x7,5 | Tubular rivet Ø4x7.5 | 14 | | | | | | | | | |
| 18 | T300505 | Cristal exterior | Outer glass | 1 | | | | | | | | | |
| 19 | R660549 | Guia eje inferior | Lower shaft guide | 1 | | | | | | | | | |
| 20 | Q062040 | Tornillo avellanado M-6x16 | Countersunk screw M-6x16 | 4 | | | | | | | | | |
| 21 | T300521 | Bisagra inferior | Lower hinge | 1 | | | | | | | | | |

| MOD. | HORNOS A GAS | ZONA | PUERTA | PLANO | C-1618 |
|---|---|---|---|---|---|

| ITEM | CODIGO | DENOMINACION | TEXTO | HGC-10 / 21 | | | | | | | | | NOTAS |
|---|---|---|---|---|---|---|---|---|---|---|---|---|---|
| 22 | Q242040 | Arandela abanico A-6 | Fan shaped washer A-6 | 2 | | | | | | | | | |
| 23 | Q012041 | Tornillo exagonal M-6x10 | Hexagonal screw M-6x10 | 2 | | | | | | | | | |
| 24 | T130502 | Manilla | Handle | 1 | | | | | | | | | |
| 25 | Q132042 | Varilla roscada M-6x15 | Threaded rod M-6x15 | 1 | | | | | | | | | |
| 26 | T130507 | Piton enganche | Fastener spike | 2 | | | | | | | | | |
| 27 | T130506 | Resorte | Spring | 2 | | | | | | | | | |
| 28 | T130515 | Guia manilla | Handle guide | 1 | | | | | | | | | |
| 29 | T300525 | Soporte iman | Magnet holder | 1 | | | | | | | | | |
| 30 | T300526 | Iman | Magnet | 1 | | | | | | | | | |
| 31 | Z100522 | Interruptor magnetico | Magnetic switch | 1 | | | | | | | | | |
| 32 | T302819 | Soporte interruptor magnet. puerta | Door magnetic switch holde | 1 | | | | | | | | | |
| | Q221342 | Remache exagonal M-5 | Hexagonal rivet M-5 | 1 | | | | | | | | | |
| | Q242030 | Arandela abanico A-5 | Fan shaped washer A-5 | 1 | | | | | | | | | |
| | Q152004 | Tornillo aplastado M-5x13 | Flat screw M-5x13 | 1 | | | | | | | | | |
| 33 | T130514 | Soporte resortes | Spring holder | 1 | | | | | | | | | |
| | Q032032 | Tornillo alomado M-5x15 | Curved screw M-5x15 | 2 | | | | | | | | | |
| 34 | T130511 | Suplemento fijacion cerradura | Lock fixing supplement | 1 | | | | | | | | | |
| 35 | T300518 | Tapon cierre canaleta | Feed through closing plug | 1 | | | | | | | | | |
| 36 | T300517 | Chapa cierre canaleta | Feed through closing cover | 1 | | | | | | | | | |
| 37 | T300524 | Resorte conico | Conical spring | 2 | | | | | | | | | |
| 38 | Q162030 | Tuerca exagonal M-5 | Hexagonal nut M-5 | 2 | | | | | | | | | |
| 39 | Z608410 | Casquillo | Bushing | 2 | | | | | | | | | |
| 40 | Q352001 | Pasador de aletas Ø2x15 | Cotter pin Ø2x15 | 4 | | | | | | | | | |
| 41 | Q042045 | Tornillo avellanado M-6x30 | Countersunk screw M-6x30 | 4 | | | | | | | | | |
| 42 | T110506 | Enganche | Fastener | 2 | | | | | | | | | |
| 43 | R660538 | Calzo de enganche | Coupling chock | 4 | | | | | | | | | |
| 44 | T300519 | Suplemento enganche | Fastener supplement | 2 | | | | | | | | | |
| 45 | T080503 | Suplemento elemento cierre | Closing element supplemer | 6 | | | | | | | | | |
| 46 | T080504 | Elemento de cierre | Closing component | 2 | | | | | | | | | |

| MOD. | HORNOS A GAS | ZONA | PUERTA | PLANO | C-1618 |
|---|---|---|---|---|---|

| ITEM | CODIGO | DENOMINACION | TEXTO | HGC-10 / 21 | | | | | | | | | NOTAS |
|---|---|---|---|---|---|---|---|---|---|---|---|---|---|
| 47 | Q242030 | Arandela abanico A-5 | Fan shaped washer A-5 | 8 | | | | | | | | | |
| 48 | Q162030 | Tuerca exagonal M-5 | Hexagonal nut M-5 | 8 | | | | | | | | | |
| 49 | T300507 | Tubo alargadera | Extension tubing | 2 | | | | | | | | | |
| 50 | T130509 | Mecanismo de cierre | Closing mechanism | 1 | | | | | | | | | |
| 51 | Q262040 | Arandela muelle A-6 | Spring washer A-6 | 2 | | | | | | | | | |
| 52 | Q162040 | Tuerca exagonal M-6 | Hexagonal nut M-6 | 2 | | | | | | | | | |
| 53 | T130508 | Eje de manilla | Handle shaft | 1 | | | | | | | | | |
| 54 | T130505 | Casquillo | Bushing | 1 | | | | | | | | | |
| 55 | Q271033 | Arandela de seguridad Ø6 | Safety washer Ø6 | 1 | | | | | | | | | |
| 56 | T300508 | Tapa cierre puerta | Door closing cover | 1 | | | | | | | | | |
| | Q032031 | Tornillo alomado M-5x10 | Curved screw M-5x10 | 2 | | | | | | | | | |
| | | | | | | | | | | | | | |
| **57** | **1100003102 KIT Cristal interior compl. 10/21** | | **Complete inner glass KIT** | **1** | | | | | | | | | |
| | | | | | | | | | | | | | |
| 58 | T300500 | Junta puerta | Door joint | 1 | | | | | | | | | |

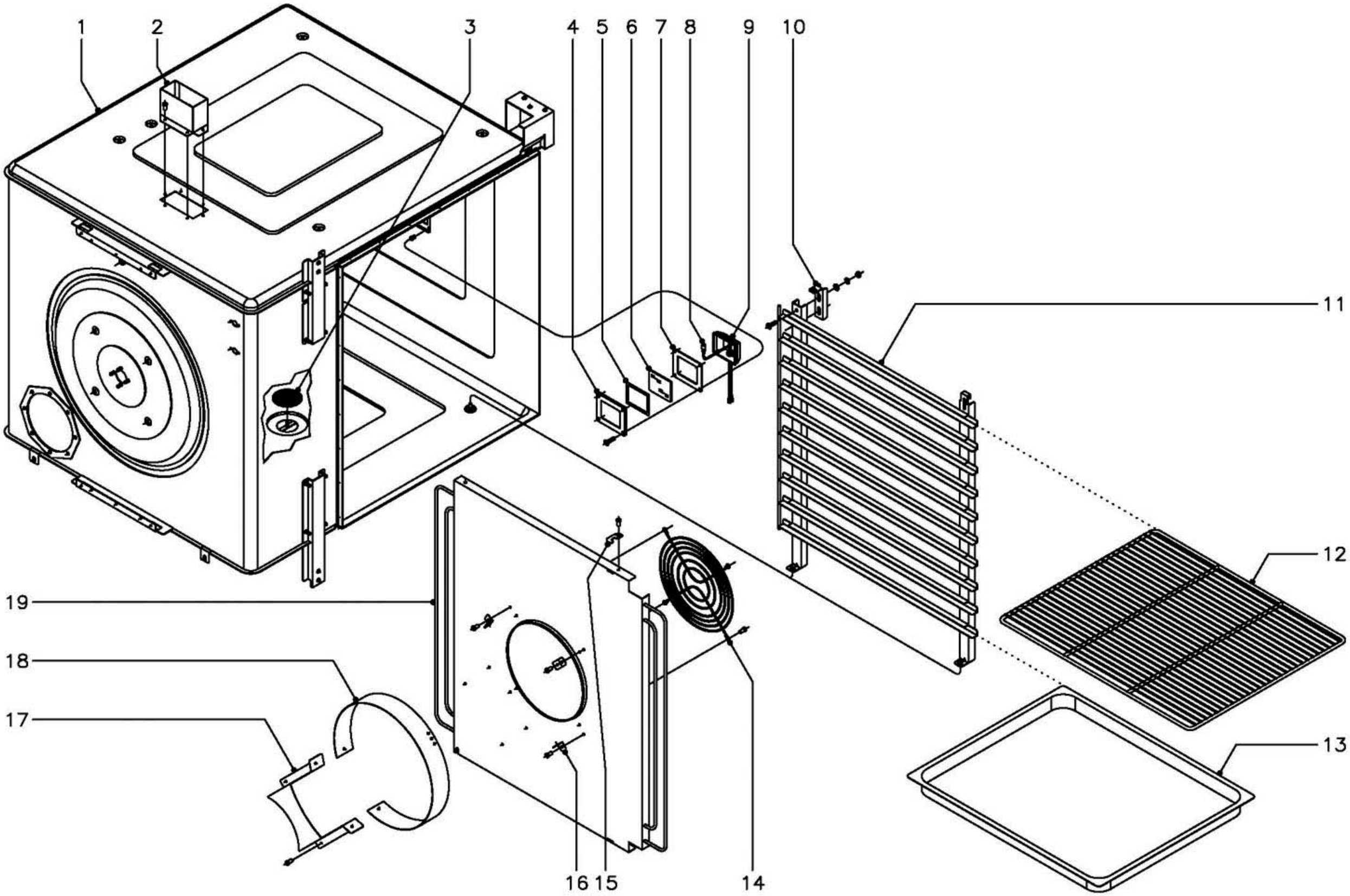


| N plano | Firma | Fecha | Aparato | Lamina | |
|---|---|---|---|---|---|
| C–1619 | | 2–2005 | MUEBLE INTERIOR<br>HORNO A GAS HGC–10/21 | 3 | Fagor Industrial S.Coop. FAGOR<br>Oñate |

| MOD. | HORNOS A GAS | ZONA | MUEBLE INTERIOR | PLANO | C-1619 |
|---|---|---|---|---|---|

| ITEM | CODIGO | DENOMINACION | TEXTO | HGC-10 / 21 | | | | | | | | | NOTAS |
|---|---|---|---|---|---|---|---|---|---|---|---|---|---|
| 1 | T342600 | Cuerpo interior completo | Complete inner body | 1 | | | | | | | | | |
| 2 | T012605 | Chimenea completa | Complete chimney | 1 | | | | | | | | | |
| | Q412002 | Remache tubular Ø4x7,5 | Tubular rivet Ø4x7.5 | 6 | | | | | | | | | |
| 3 | T302625 | Filtro desague completo | Complete waste pipe filter | 1 | | | | | | | | | |
| 4 | T303047 | Pletina amarre lampara | Lamp anchoring platen | 1 | | | | | | | | | |
| | Q042022 | Tornillo avellanado M-4x15 | Countersunk screw M-4x15 | 4 | | | | | | | | | |
| | Q222041 | Remache exagonal M-4 | Hexagonal rivet M-4 | 4 | | | | | | | | | |
| 5 | T303027 | Junta interior lampara | Lamp inner joint | 1 | | | | | | | | | |
| 6 | T303025 | Cristal lampara | Lamp glass | 1 | | | | | | | | | |
| 7 | T303026 | Junta exterior lampara | Lamp outer joint | 1 | | | | | | | | | |
| 8 | R663013 | Lampara 10 W., 12 V. | Lamp 10 W, 12 V | 1 | | | | | | | | | |
| 9 | T303023 | Portalamparas | Lamp holder | 1 | | | | | | | | | |
| 10 | T302660 | Suplemento guias | Guide supplement | 2 | | | | | | | | | |
| | Q152004 | Tornillo aplastado M-5x13 | Flat screw M-5x13 | 4 | | | | | | | | | |
| | Q302022 | Arandela plana Ø16xØ6x1,2 | Flat washer Ø16xØ6x1.2 | 4 | | | | | | | | | |
| | Q242030 | Arandela abanico A-5 | Fan shaped washer A-5 | 4 | | | | | | | | | |
| | Q162030 | Tuerca exagonal M-5 | Hexagonal nut M-5 | 4 | | | | | | | | | |
| 11 | T302620 | Conjunto guias derecho | Right guide set | 1 | | | | | | | | | |
| s/n | T302624 | Conjunto guias izquierdo | Left guide set | 1 | | | | | | | | | |
| 12 | R682676 | Parrilla de horno G.N.-2/1 | Oven grill G.N.-2/1 | 1 | | | | | | | | | |
| 13 | R032605 | Bandeja de horno G.N.-2/1, h=40 | Oven tray G.N.-2/1, h=40 | 1 | | | | | | | | | |
| 14 | R662661 | Proteccion de turbina | Turbine protection | 1 | | | | | | | | | |
| | Q412002 | Remache tubular Ø4x7,5 | Tubular rivet Ø4x7.5 | 4 | | | | | | | | | |
| 15 | T302635 | Enganche cubreventilador | Fan cover fastener | 2 | | | | | | | | | |
| | Q412002 | Remache tubular Ø4x7,5 | Tubular rivet Ø4x7.5 | 2 | | | | | | | | | |
| 16 | T302643 | Fijacion suplemento cubreventilad. | Fan cover suplement bindin | 3 | | | | | | | | | |
| | Q412002 | Remache tubular Ø4x7,5 | Tubular rivet Ø4x7.5 | 3 | | | | | | | | | |
| 17 | T342604 | Conducto de humos HGC | HCG smoke conduct | 1 | | | | | | | | | |
| | Q412002 | Remache tubular Ø4x7,5 | Tubular rivet Ø4x7.5 | 6 | | | | | | | | | |

| MOD. | HORNOS A GAS | ZONA | MUEBLE INTERIOR | PLANO | C-1619 |
|---|---|---|---|---|---|

| ITEM | CODIGO | DENOMINACION | TEXTO | HGC-10 / 21 | | | | | | | | | NOTAS |
|---|---|---|---|---|---|---|---|---|---|---|---|---|---|
| 18 | T302642 | Suplemento cubreventilador | Fan cover supplement | 1 | | | | | | | | | |
| | Q412002 | Remache tubular Ø4x7,5 | Tubular rivet Ø4x7.5 | 3 | | | | | | | | | |
| 19 | T302633 | Cubreventilador completo | Complete fan cover | 1 | | | | | | | | | |
| | | | | | | | | | | | | | |
| | T302650 | Aislante techo 970x850x20 | Roof insulator 970x850x20 | 3 | | | | | | | | | Vitrofib |
| | T302650 | Aislante base 970x850x20 | Base insulator 970x850x20 | 1 | | | | | | | | | Vitrofib |
| | T302651 | Aislante lateral decho. 890x850x20 | Right side insulator 890x850 | 2 | | | | | | | | | Vitrofib |
| | T302653 | Aislante lateral izdo. 1230x900x10 | Left side insulator 1230x900 | 1 | | | | | | | | | Fieltro con alumi. |
| | T302654 | Aislante lat. lzdo.inferi. 860x160x10 | Lower left side insulator 860 | 1 | | | | | | | | | Fieltro con alumi. |
| | T302659 | Aislante izdo. motor 265x265x10 | Left motor insulator 265x265 | 1 | | | | | | | | | Fieltro con alumi. |
| | T302652 | Aislante posterior 970x880x20 | Rear insulator 970x880x20 | 2 | | | | | | | | | Vitrofib |
| | T302658 | Aislante frontal vertical 1000x30x10 | Front vertical insulator 1000 | 1 | | | | | | | | | Fieltro con alumi. |
| | T322604 | Aislante portamand. 1000x120x20 | Control insulator 1000x120x | 1 | | | | | | | | | Fieltro con alumi. |
| | T302667 | Arandela sujecion aislante | Insulator fixing washer | 13 | | | | | | | | | |
| | Q221026 | Clip sujecion rapida D-4 | Quick fastening clip D-4 | 13 | | | | | | | | | |
| | | | | | | | | | | | | | |
| | | | | | | | | | | | | | |
| | | | | | | | | | | | | | |
| | | | | | | | | | | | | | |
| | | | | | | | | | | | | | |
| | | | | | | | | | | | | | |
| | | | | | | | | | | | | | |
| | | | | | | | | | | | | | |
| | | | | | | | | | | | | | |
| | | | | | | | | | | | | | |
| | | | | | | | | | | | | | |
| | | | | | | | | | | | | | |
| | | | | | | | | | | | | | |
| | | | | | | | | | | | | | |

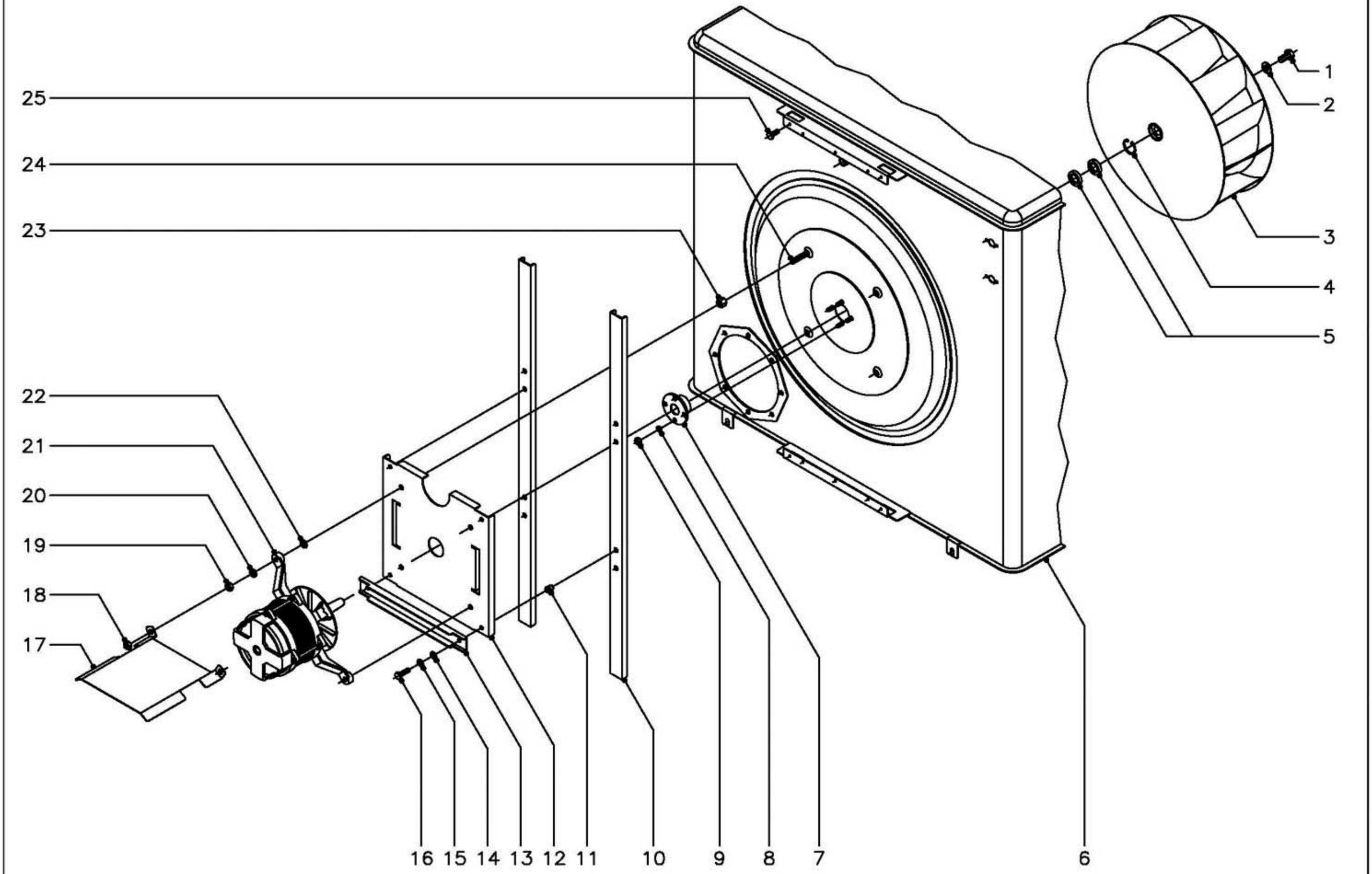


| N plano | Firma | Fecha | Aparato | Lamina | |
|---|---|---|---|---|---|
| C–1620 | | 2–2005 | TURBINA<br>HORNO A GAS HGC–10/21 | 4 | Fagor Industrial S.Coop. FAGOR<br>Onate |

| MOD. | HORNOS A GAS | ZONA | TURBINA | PLANO | C-1620 |
|---|---|---|---|---|---|

| ITEM | CODIGO | DENOMINACION | TEXTO | HGC-10 / 21 | | | | | | | | | NOTAS |
|---|---|---|---|---|---|---|---|---|---|---|---|---|---|
| 1 | Q012063 | Tornillo exagonal M-10x20 | Hexagonal screw M-10x20 | 1 | | | | | | | | | |
| 2 | R763010 | Arandela seguridad Hanning | Hanning safety washer | 1 | | | | | | | | | |
| 3 | T303015 | Turbina | Turbine | 1 | | | | | | | | | |
| 4 | Q302023 | Anillo de seguridad Ø 28x1,2 | Safety ring Ø 28x1.2 | 1 | | | | | | | | | |
| 5 | R662627 | Reten Ø 28xØ 17x7 | Retainer Ø 28xØ 17x7 | 2 | | | | | | | | | |
| 6 | - | Costado izquierdo de horno | Left side of oven | 1 | | | | | | | | | |
| 7 | T302629 | Casquillo reten | Bushing retainer | 1 | | | | | | | | | |
| 8 | Q262040 | Arandela grower A-6 | Grower washer A-6 | 4 | | | | | | | | | |
| 9 | Q162040 | Tuerca exagonal M-6 | Hexagonal nut M-6 | 4 | | | | | | | | | |
| 10 | T302628 | Perfil soporte motor | Motor holder profile | 2 | | | | | | | | | |
| 11 | Q221342 | Remache exagonal M-5 | Hexagonal rivet M-5 | 4 | | | | | | | | | |
| 12 | T302627 | Soporte motor | Motor holder | 1 | | | | | | | | | |
| 13 | T302649 | Refuerzo motor | Motor reinforcement | 2 | | | | | | | | | |
| 14 | Q232030 | Arandela plana A-5 | Flat washer A-5 | 4 | | | | | | | | | |
| 15 | Q242030 | Arandela abanico A-5 | Fan shaped washer A-5 | 4 | | | | | | | | | |
| 16 | Q012032 | Tornillo exagonal M-5x15 | Hexagonal screw M-5x15 | 4 | | | | | | | | | |
| 17 | T302665 | Tejadillo motor | Motor roof | 1 | | | | | | | | | |
| 18 | Q162050 | Tuerca exagonal M-8 | Hexagonal nut M-8 | 2 | | | | | | | | | |
| 19 | Q162050 | Tuerca exagonal M-8 | Hexagonal nut M-8 | 4 | | | | | | | | | |
| 20 | Q242050 | Arandela abanico A-8 | Fan shaped washer A-8 | 4 | | | | | | | | | |
| 21 | T323022 | Motor de turbina | Turbine motor | 1 | | | | | | | | | |
| 22 | Q232050 | Arandela plana A-8 | Flat washer A-8 | 4 | | | | | | | | | |
| 23 | T302638 | Distanciador motor | Motor spacer | 4 | | | | | | | | | |
| 24 | Q012056 | Tornillo exagonal M-8x40 | Hexagonal screw M-8x40 | 4 | | | | | | | | | |
| 25 | Q012031 | Tornillo exagonal M-5x10 | Hexagonal screw M-5x10 | 4 | | | | | | | | | |
| | | | | | | | | | | | | | |
| | | | | | | | | | | | | | |
| | | | | | | | | | | | | | |
| | | | | | | | | | | | | | |

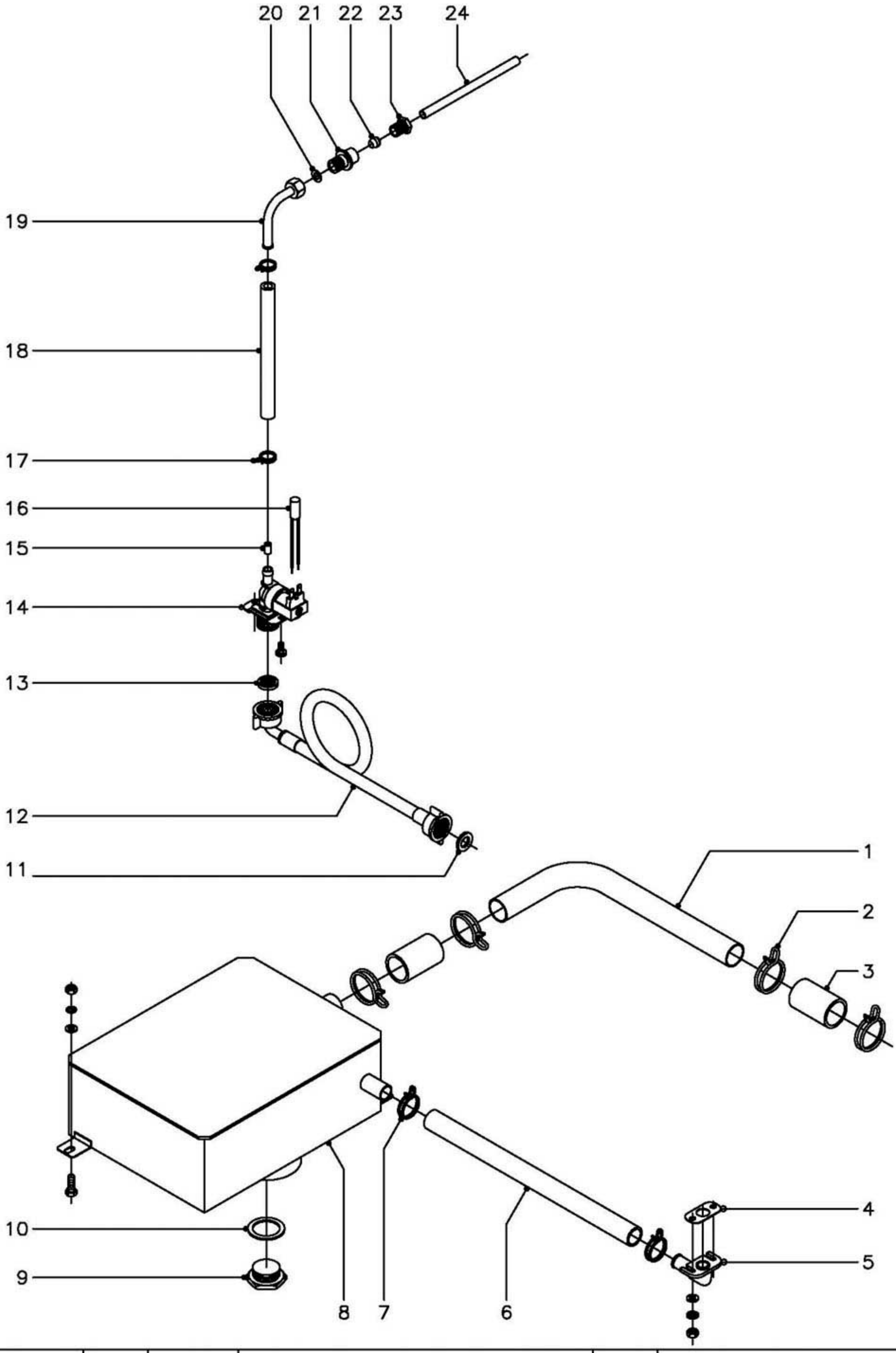


| N plano | Firma | Fecha | Aparato | Lamina | |
|---|---|---|---|---|---|
| C–1621 | | 2–2005 | CIRCUITO DE AGUA<br>HORNO A GAS HGC–10/21 | 5 | Fagor Industrial S.Coop. FAGOR<br>Oñate |

| MOD. | HORNOS A GAS | ZONA | CIRCUITO DE AGUA | PLANO | C-1621 |
|---|---|---|---|---|---|

| ITEM | CODIGO | DENOMINACION | TEXTO | HGC-10 / 21 | | | | | | | | | NOTAS |
|---|---|---|---|---|---|---|---|---|---|---|---|---|---|
| 1 | T305075 | Conducto desagüe horno | Oven drain conduct | 1 | | | | | | | | | |
| 2 | Q901307 | Abrazadera elastica Ø37,7 - 39,7 | Elastic clamp Ø26.7 - 39.7 | 4 | | | | | | | | | |
| 3 | 3714100 | Tubo silicona Ø38xØ31x60 | Silicone tubing Ø38xØ31x60 | 2 | | | | | | | | | |
| 4 | T302845 | Junta recogeaguas | Water collector joint | 1 | | | | | | | | | |
| 5 | T302844 | Desague recogeaguas | Water collection waste pipe | 1 | | | | | | | | | |
| 6 | 3715600 | Tubo recogeaguas Ø26xØ18x600 | Water collection tubing Ø26 | 1 | | | | | | | | | |
| 7 | Q901311 | Abrazadera elastica Ø26,7 - 28,1 | Elastic clamp Ø26.7 - 28.1 | 2 | | | | | | | | | |
| 8 | T345013 | Caja desagüe completa | Complete drainage box | 1 | | | | | | | | | |
| | Q012042 | Tornillo exagonal M-6x15 | Hexagonal screw M-6x15 | 2 | | | | | | | | | |
| | Q232040 | Arandela plana A-6 | Flat washer A-6 | 2 | | | | | | | | | |
| | Q262040 | Arandela grower A-6 | Grower washer A-6 | 2 | | | | | | | | | |
| | Q162040 | Tuerca exagonal M-6 | Hexagonal nut M-6 | 2 | | | | | | | | | |
| 9 | T305052 | Tapon desagüe | Waste pipe plug | 1 | | | | | | | | | |
| 10 | T305053 | Junta desagüe | Waste pipe joint | 1 | | | | | | | | | |
| 11 | Q307031 | Junta manguera Ø24xØ14x3 | Hose joint Ø24xØ14x3 | 1 | | | | | | | | | |
| 12 | Z601114 | Manguera entrada de agua | Water inlet hose | 1 | | | | | | | | | |
| 13 | Z701132 | Filtro-junta entrada de agua | Filter-joint water inlet | 1 | | | | | | | | | |
| 14 | Z701135 | Electrovalvula entrada de agua | Water inlet solenoide valve | 1 | | | | | | | | | |
| | Q153021 | Tornillo alomado M-4x10 | Curved screw M-4x10 | 2 | | | | | | | | | |
| 15 | R715011 | Regulador caudal 0,5 l./min. (naranja) | Flow regulator 0.5 l/min (ora | 1 | | | | | | | | | |
| 16 | Z233012 | Condensador antiparasitario | Antiparasistic condensor | 1 | | | | | | | | | |
| 17 | Q901310 | Abrazadera elastica Ø16,8 - 17,7 | Elastic clamp Ø16.8 - 17.7 | 2 | | | | | | | | | |
| 18 | 3676900 | Tubo goma negra Ø17xØ10x850 | Black rubber tubing Ø17xØ1 | 1 | | | | | | | | | |
| 19 | R695017 | Tubo conduccion agua completo | Complete water conduction | 1 | | | | | | | | | |
| 20 | Q306026 | Arandela junta Ø14xØ8,5x1,5 | Joint washer Ø14xØ8.5x1.5 | 1 | | | | | | | | | |
| 21 | - | Casquillo soldado a cuerpo horno | Bushing welded onto oven b | 1 | | | | | | | | | |
| 22 | R695004 | Bicono | Bicone | 1 | | | | | | | | | |
| 23 | R695003 | Manguito cierre | Closing sleeve | 1 | | | | | | | | | |
| 24 | R665024 | Tubo conduccion inyector | Injector conduction tubing | 1 | | | | | | | | | |

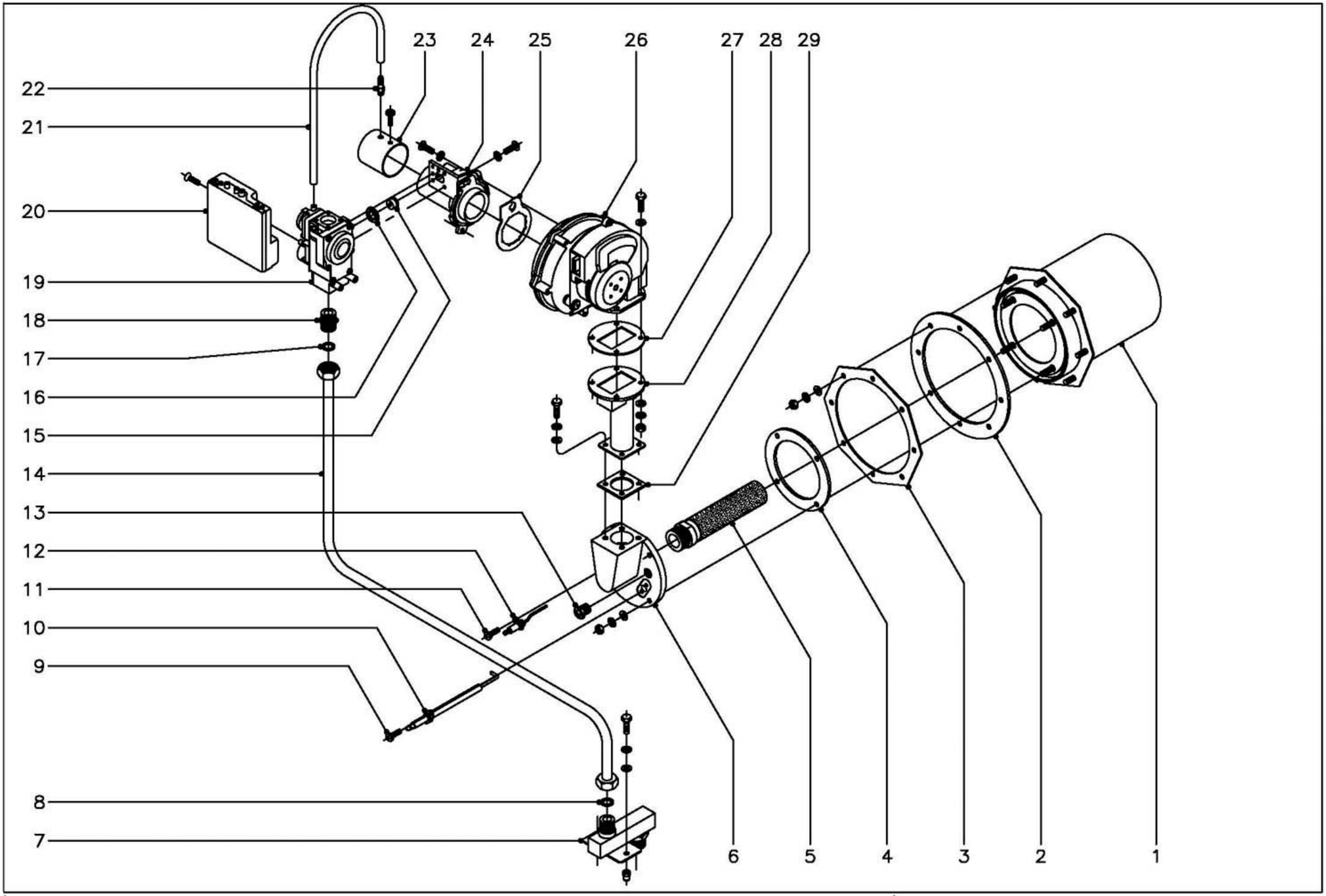


| N plano | Firma | Fecha | Aparato | Lamina | |
|---|---|---|---|---|---|
| C–1622 | | 2–2005 | PARTE FUNCIONAL GAS<br>HORNO A GAS HGC–10/21 | 6 | Fagor Industrial S.Coop. FAGOR<br>Onate |

| MOD. | HORNOS A GAS | ZONA | PARTE FUNCIONAL GAS | PLANO | C-1622 |
|---|---|---|---|---|---|

| ITEM | CODIGO | DENOMINACION | TEXTO | HGC-10 / 21 | | | | | | | | | NOTAS |
|---|---|---|---|---|---|---|---|---|---|---|---|---|---|
| 1 | T345701 | Camara combustion completa | Complete combustion cham | 1 | | | | | | | | | |
| 2 | R725051 | Junta camara combustion | Combustion chamber joint | 1 | | | | | | | | | |
| 3 | - | Brida amarre camara combustion | Combustion chamber ancho | 1 | | | | | | | | | Caldeado a cuerpo de horno |
| | Q232040 | Arandela plana A-6 | Flat washer A-6 | 8 | | | | | | | | | |
| | Q262040 | Arandela grower A-6 | Grower washer A-6 | 8 | | | | | | | | | |
| | Q163040 | Tuerca exagonal M-6 | Hexagonal nut M-6 | 8 | | | | | | | | | |
| 4 | R725055 | Junta de tapa principal | Main cover joint | 1 | | | | | | | | | |
| 5 | T115710 | Quemador Furigas | Furigas burner | 1 | | | | | | | | | |
| 6 | T115782 | Tapa principal | Main cover | 1 | | | | | | | | | |
| | Q232040 | Arandela plana A-6 | Flat washer A-6 | 4 | | | | | | | | | Amarre tapa-camara combustion |
| | Q242030 | Arandela abanico A-6 | Fan shaped washer A-6 | 4 | | | | | | | | | Amarre tapa-camara combustion |
| | Q163040 | Tuerca exagonal M-6 | Hexagonal nut M-6 | 4 | | | | | | | | | Amarre tapa-camara combustion |
| 7 | T345005 | Entrada de gas completa | Complete gas inlet | 1 | | | | | | | | | |
| | Q012032 | Tornillo exagonal M-5x15 | Hexagonal screw M-5x15 | 2 | | | | | | | | | |
| | Q242030 | Arandela abanico A-5 | Fan shaped washer A-5 | 2 | | | | | | | | | |
| | Q232030 | Arandela plana A-5 | Flat washer A-5 | 2 | | | | | | | | | |
| | Q221342 | Remache exagonal M-5 | Hexagonal rivet M-5 | 2 | | | | | | | | | |
| 8 | Q306012 | Arandela junta Ø18xØ13x1,5 | Joint washer Ø18xØ13x1.5 | 1 | | | | | | | | | |
| 9 | Q153021 | Tornillo alomado M-4x10 | Curved screw M-4x10 | 2 | | | | | | | | | |
| 10 | T115781 | Electrodo de ignicion | Ignition electrode | 1 | | | | | | | | | |
| 11 | Q153021 | Tornillo alomado M-4x10 | Curved screw M-4x10 | 1 | | | | | | | | | |
| 12 | T115712 | Electrodo de deteccion | Detection electrode | 1 | | | | | | | | | |
| 13 | R725015 | Visor de encendido | Ignition sight | 1 | | | | | | | | | |
| 14 | T345008 | Conduccion a valvula completa | Complete valve conduction | 1 | | | | | | | | | |
| 15 | T305068 | Tobera VK41, Ø4,8 (Buta.-Propa.) | Nozzle VK41, Ø4.8 (Buta.-P | 1 | | | | | | | | | |
| 15 | T305069 | Tobera VK41, Ø6 (Gas Natural) | Nozzle VK41, Ø6 (Natural | 1 | | | | | | | | | |
| 16 | T303046 | Junta venturi 24x15,5 | Venturi joint 24x150.5 | 1 | | | | | | | | | |
| 17 | Q306012 | Arandela junta Ø18xØ13x1,5 | Joint washer Ø18xØ13x1.5 | 1 | | | | | | | | | |
| 18 | S205023 | Manguito doble 1/2" | Double sleeve 1/2" | 1 | | | | | | | | | |

| MOD. | HORNOS A GAS | ZONA | PARTE FUNCIONAL GAS | PLANO | C-1622 |
|---|---|---|---|---|---|

| ITEM | CODIGO | DENOMINACION | TEXTO | HGC-10 / 21 | | | | | | | | | NOTAS |
|---|---|---|---|---|---|---|---|---|---|---|---|---|---|
| 19 | T303017 | Valvula VK-4115 V-1121 | Valve VK-4115 V-1121 | 1 | | | | | | | | | |
| | Q242030 | Arandela abanico A-5 | Fan shaped washer A-5 | 3 | | | | | | | | | |
| | Q152004 | Tornillo aplastado M-5x13 | Flat screw M-5x13 | 3 | | | | | | | | | |
| 20 | T303013 | Control de encendido | Ignition control | 1 | | | | | | | | | |
| | Q032011 | Tornillo alomado M-3x10 | Curved screw M-3x10 | 1 | | | | | | | | | |
| 21 | 3702400 | Tubo goma negra Ø8xØ4x200 | Black rubber tubing Ø8xØ4x | 1 | | | | | | | | | |
| 22 | R725077 | Boquilla conexión | Connection nozzle | 1 | | | | | | | | | |
| 23 | T305712 | Tubo ventilador completo | Complete ventilating tubing | 1 | | | | | | | | | |
| | Q032021 | Tornillo alomado M-4x10 | Curved screw M-4x10 | 1 | | | | | | | | | |
| 24 | T303040 | Venturi | Venturi | 1 | | | | | | | | | |
| 25 | - | Junta venturi-ventilador | Venturi-fan joint | 1 | | | | | | | | | Viene con venturi |
| | Q242030 | Arandela abanico A-5 | Fan shaped washer A-5 | 2 | | | | | | | | | |
| | Q152004 | Tornillo aplastado M-5x13 | Flat screw M-5x13 | 2 | | | | | | | | | |
| 26 | T303016 | Ventilador RG-130 | Fan RG-130 | 1 | | | | | | | | | |
| | Q012043 | Tornillo exagonal M-6x20 | Hexagonal screw M-6x20 | 4 | | | | | | | | | Amarre ventilador-conduccion |
| | Q232040 | Arandela plana A-6 | Flat washer A-6 | 8 | | | | | | | | | Amarre ventilador-conduccion |
| | Q242030 | Arandela abanico A-6 | Fan shaped washer A-6 | 4 | | | | | | | | | Amarre ventilador-conduccion |
| | Q163040 | Tuerca exagonal M-6 | Hexagonal nut M-6 | 4 | | | | | | | | | Amarre ventilador-conduccion |
| 27 | T305042 | Junta ventilador | Fan joint | 1 | | | | | | | | | |
| 28 | T345000 | Conducto a tapa principal compl. | Complete conduct to main c | 1 | | | | | | | | | |
| | Q012032 | Tornillo exagonal M-5x15 | Hexagonal screw M-5x15 | 4 | | | | | | | | | Amarre conduccion a tapa principal |
| | Q242030 | Arandela abanico A-5 | Fan shaped washer A-5 | 4 | | | | | | | | | Amarre conduccion a tapa principal |
| | Q232030 | Arandela plana A-5 | Flat washer A-5 | 4 | | | | | | | | | Amarre conduccion a tapa principal |
| 29 | T305041 | Junta tapa principal-conducto | Main cover-conduct joint | 1 | | | | | | | | | |
| | | | | | | | | | | | | | |
| | | | | | | | | | | | | | |
| | | | | | | | | | | | | | |
| | | | | | | | | | | | | | |
| | | | | | | | | | | | | | |

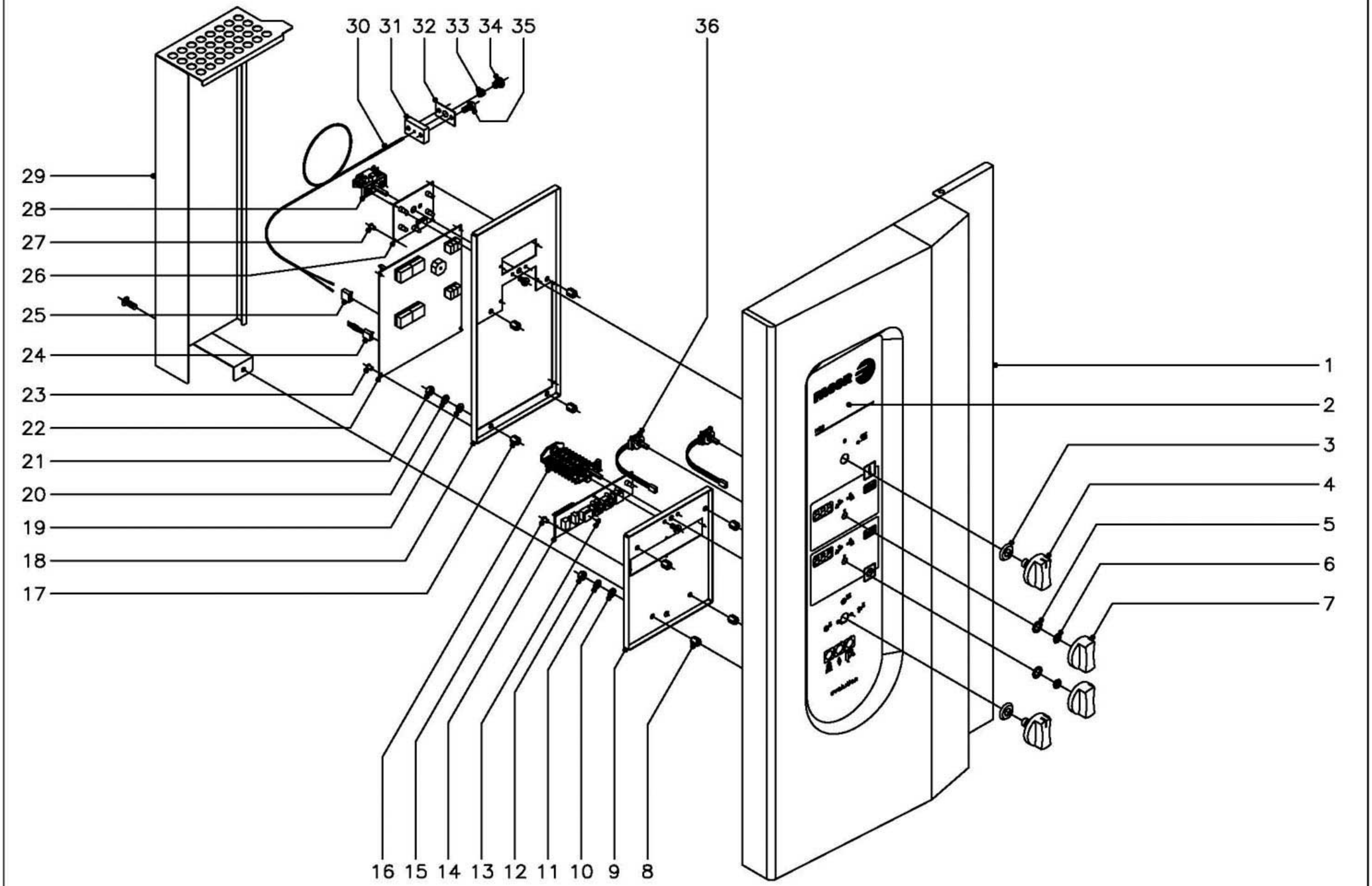


| N plano | Firma | Fecha | Aparato | Lamina | |
|---|---|---|---|---|---|
| C–1623 | | 2–2005 | PARTE ELECTRICA PORTAMANDOS<br>HORNO A GAS HGC–10/21 | 7 | Fagor Industrial S.Coop. FAGOR<br>Onate |

| MOD. | HORNOS A GAS | ZONA | PARTE ELECTRICA PORTAMANDOS | PLANO | C-1623 |
|---|---|---|---|---|---|

| ITEM | CODIGO | DENOMINACION | TEXTO | HGC-10 / 21 | | | | | | | | | NOTAS |
|---|---|---|---|---|---|---|---|---|---|---|---|---|---|
| 1 | T322806 | Panel portamandos | Control panel | 1 | | | | | | | | | |
| 2 | T343001 | Serigrafia HGC-10 / 21 | Serigraphy HGC-10 / 21 | 1 | | | | | | | | | |
| 3 | R663046 | Junta conmutador | Switch joint | 2 | | | | | | | | | |
| 4 | T303010 | Boton de mando completo | Complete control button | 2 | | | | | | | | | |
| 5 | - | Arandela (viene con tuerca M-10) | Washer (comes with M-10 n | 2 | | | | | | | | | |
| 6 | Z953041 | Tuerca exagonal M-10 | Hexagonal nut M-10 | 2 | | | | | | | | | |
| 7 | T303011 | Boton de mando completo | Complete control button | 2 | | | | | | | | | |
| 8 | T302829 | Distanciador componentes | Components spacer | 4 | | | | | | | | | |
| 9 | T303021 | Soporte circuitos | Circuit holder | 1 | | | | | | | | | |
| 10 | Q232030 | Arandela plana A-5 | Flat washer A-5 | 4 | | | | | | | | | |
| 11 | Q242030 | Arandela abanico A-5 | Fan shaped washer A-5 | 4 | | | | | | | | | |
| 12 | Q163030 | Tuerca exagonal M-5 | Hexagonal nut M-5 | 4 | | | | | | | | | |
| 13 | R663056 | Bapipons autoadesivo | Self adhesive bupipons | 3 | | | | | | | | | |
| 14 | T303019 | Circuito teclado | Key board circuit | 1 | | | | | | | | | |
| 15 | R663036 | Fijacion circuito | Circuit bindings | 4 | | | | | | | | | |
| 16 | R663026 | Conmutador de funciones | Function switch | 1 | | | | | | | | | |
| | Q151320 | Tornillo alomado M-4x6 | Curved screw M-4x6 | 2 | | | | | | | | | |
| 17 | T302829 | Distanciador componentes | Components spacer | 4 | | | | | | | | | |
| 18 | T302826 | Soporte componentes | Components holder | 1 | | | | | | | | | |
| 19 | Q232030 | Arandela plana A-5 | Flat washer A-5 | 4 | | | | | | | | | |
| 20 | Q242030 | Arandela abanico A-5 | Fan shaped washer A-5 | 4 | | | | | | | | | |
| 21 | Q163030 | Tuerca exagonal M-5 | Hexagonal nut M-5 | 4 | | | | | | | | | |
| 22 | T353003 | Controlador | Controller | 1 | | | | | | | | | |
| 23 | R663036 | Fijacion circuito | Circuit bindings | 4 | | | | | | | | | |
| 24 | T343007 | Resistencia selec. modo convecc. | Convecc. mode selec. resist | 1 | | | | | | | | | |
| 25 | T343005 | Conector 4 vias | 4 way connector | 1 | | | | | | | | | |
| 26 | T303018 | Circuito de leds visualizador | Display leds circuit | 1 | | | | | | | | | |
| 27 | R663036 | Fijacion circuito | Circuit bindings | 4 | | | | | | | | | |
| 28 | T343008 | Interruptor general | General switch | 1 | | | | | | | | | |
| | | | | | | | | | | | | | |

| MOD. | HORNOS A GAS | ZONA | PARTE ELECTRICA PORTAMANDOS | PLANO | C-1623 |
|---|---|---|---|---|---|

| ITEM | CODIGO | DENOMINACION | TEXTO | HGC-10 / 21 | | | | | | | | | NOTAS |
|---|---|---|---|---|---|---|---|---|---|---|---|---|---|
| | Q151320 | Tornillo alomado M-4x6 | Curved screw M-4x6 | 2 | | | | | | | | | |
| 29 | T303039 | Proteccion circuitos | Circuit protection | 1 | | | | | | | | | |
| | Q152004 | Tornillo aplastado M-5x13 | Flat screw M-5x13 | 1 | | | | | | | | | |
| 30 | T323011 | Conjunto termopar camara L=700 | Chamber thermocouple set | 1 | | | | | | | | | |
| 31 | T112625 | Base cierre sonda (pasamuros) | Probe closing base (wire pr | 1 | | | | | | | | | |
| 32 | R692812 | Junta pasamuros | Wire protection joint | 1 | | | | | | | | | |
| 33 | R662652 | Bicono cierre sonda | Probe closing bicone | 1 | | | | | | | | | |
| 34 | R662629 | Racord cierre sonda | Probe closing adaptor | 1 | | | | | | | | | |
| 35 | Q012021 | Tornillo exagonal M-4x10 | Hexagonal screw M-4x10 | 2 | | | | | | | | | |
| 36 | T303022 | Selector encoder | Encoder selector | 2 | | | | | | | | | |

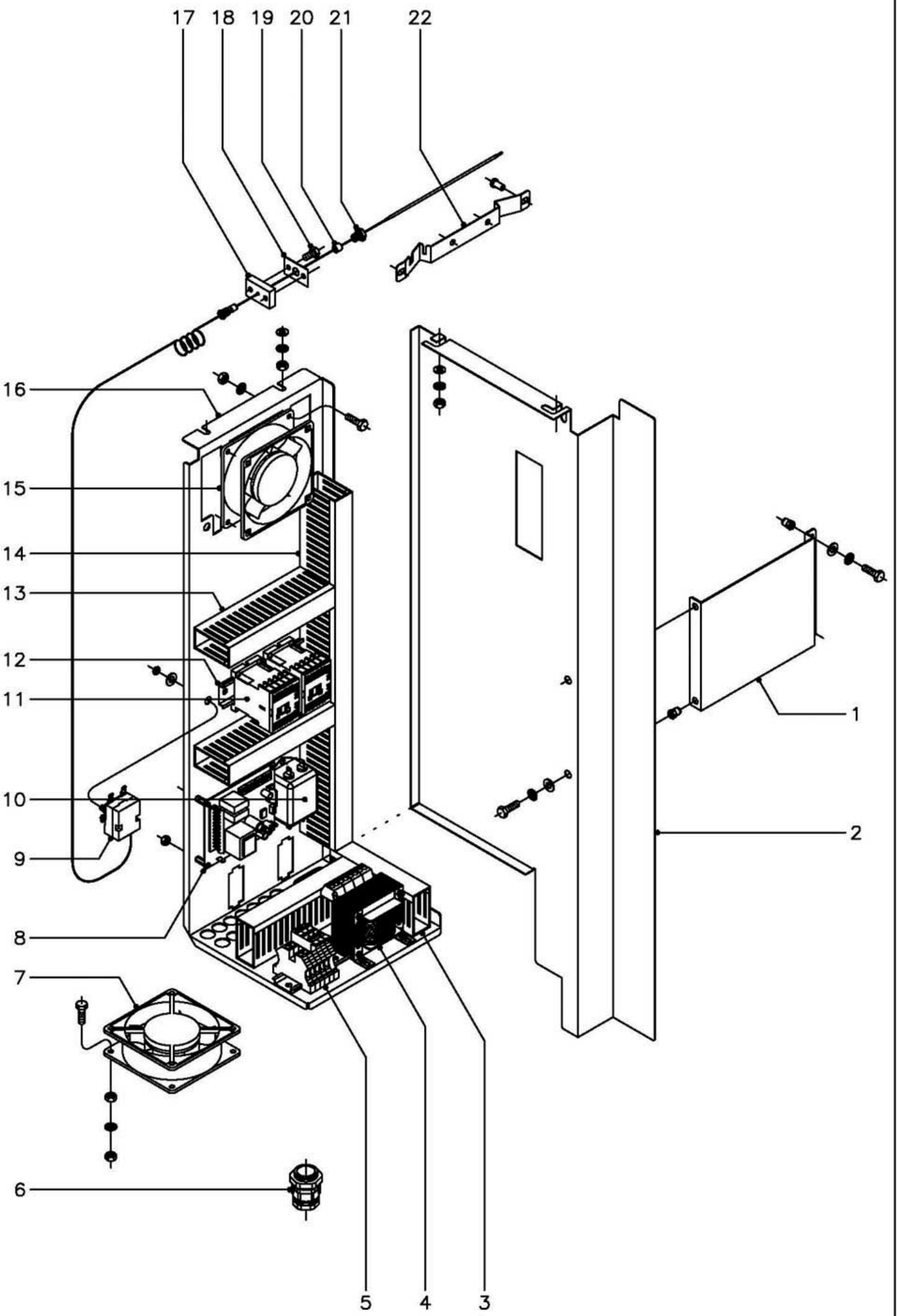


| N plano | Firma | Fecha | Aparato | Lamina | |
|---|---|---|---|---|---|
| C–1624 | | 2–2005 | CUADRO ELECTRICO<br>HORNO A GAS HGC–10/21 | 8 | Fagor Industrial S.Coop. FAGOR<br>Oñate |

| MOD. | HORNOS A GAS | ZONA | CUADRO ELECTRICO | PLANO | C-1624 |
|---|---|---|---|---|---|

| ITEM | CODIGO | DENOMINACION | TEXTO | HGC-10 / 21 | | | | | | | | | NOTAS |
|---|---|---|---|---|---|---|---|---|---|---|---|---|---|
| 1 | T303051 | Soporte cierre cuadro electrico | Switchboard closing holder | 1 | | | | | | | | | |
| | Q012032 | Tornillo exagonal M-5x15 | Hexagonal screw M-5x15 | 2 | | | | | | | | | |
| | Q242030 | Arandela abanico A-5 | Fan shaped washer A-5 | 2 | | | | | | | | | |
| | Q302022 | Arandela plana Ø16xØ6x1,2 | Flat washer Ø16xØ6x1.2 | 2 | | | | | | | | | |
| | Q221342 | Remache exagonal M-5 | Hexagonal rivet M-5 | 2 | | | | | | | | | |
| 2 | T323003 | Cierre cuadro electrico | Switchboard closing | 1 | | | | | | | | | |
| | Q012032 | Tornillo exagonal M-5x15 | Hexagonal screw M-5x15 | 2 | | | | | | | | | Amarre cierre a soporte |
| | Q242030 | Arandela abanico A-5 | Fan shaped washer A-5 | 2 | | | | | | | | | Amarre cierre a soporte |
| | Q302022 | Arandela plana Ø16xØ6x1,2 | Flat washer Ø16xØ6x1.2 | 2 | | | | | | | | | Amarre cierre a soporte |
| | Q221342 | Remache exagonal M-5 | Hexagonal rivet M-5 | 2 | | | | | | | | | Amarre cierre a soporte |
| | Q302022 | Arandela plana Ø16xØ6x1,2 | lat washer Ø16xØ6x1.2 | 2 | | | | | | | | | Amarre cierre a techo |
| | Q242030 | Arandela abanico A-6 | Fan shaped washer A-6 | 2 | | | | | | | | | Amarre cierre a techo |
| | Q163040 | Tuerca exagonal M-6 | Hexagonal nut M-6 | 2 | | | | | | | | | Amarre cierre a techo |
| 3 | 3715520 | Canaleta unex 30x60x150 | Unex feed through 30x60x1 | 1 | | | | | | | | | |
| | Q412002 | Remache tubular Ø4x7,5 | Tubular rivet Ø4x7.5 | 2 | | | | | | | | | |
| 4 | R503005 | Transformador | Transformer | 1 | | | | | | | | | |
| | Q032021 | Tornillo alomado M-4x10 | Curved screw M-4x10 | 4 | | | | | | | | | |
| | Q242020 | Arandela abanico A-4 | Fan shaped washer A-4 | 4 | | | | | | | | | |
| | Q162020 | Tuerca exagonal M-4 | Hexagonal nut M-4 | 4 | | | | | | | | | |
| 5 | Z263303 | Tope final 10 | End buffer 10 | 1 | | | | | | | | | |
| | R073005 | Borna portafusible | Fuse carrier connection | 3 | | | | | | | | | |
| | P184011 | Cartucho portafusible 4A. | Fuse holder cartridge 4A. | 3 | | | | | | | | | |
| | Z263302 | Borne paso 10 azul | Blue connector lead 10 blue | 1 | | | | | | | | | |
| | P453026 | Borne tierra 10 amarillo-verde | Earth connector 10 yellow-g | 1 | | | | | | | | | |
| | Z403016 | Guia contactor L=100 | Contactor guide G=100 | 1 | | | | | | | | | |
| | Q412002 | Remache tubular Ø4x7,5 | Tubular rivet Ø4x7.5 | 2 | | | | | | | | | |
| 6 | R073004 | prensaestopas | Stuffing box | 1 | | | | | | | | | |
| 7 | Z103066 | Ventilador 230V., 50/60 Hz. | Fan 230 V, 50/60 Hz | 1 | | | | | | | | | |
| | Q013023 | Tornillo exagonal M-4x20 | Hexagonal screw M-4x20 | 4 | | | | | | | | | |

| MOD. | HORNOS A GAS | ZONA | CUADRO ELECTRICO | PLANO | C-1624 |
|---|---|---|---|---|---|

| ITEM | CODIGO | DENOMINACION | TEXTO | HGC-10 / 21 | | | | | | | | | NOTAS |
|---|---|---|---|---|---|---|---|---|---|---|---|---|---|
| | Q242020 | Arandela abanico A-4 | Fan shaped washer A-4 | 4 | | | | | | | | | |
| | Q162020 | Tuerca exagonal M-4 | Hexagonal nut M-4 | 8 | | | | | | | | | |
| 8 | T303048 | Variador hornos gas 4V | 4V gas ovens variator | 1 | | | | | | | | | |
| | T133007 | Distanciador M-3 | Spacer M-3 | 4 | | | | | | | | | |
| | T133008 | Tornillo amarre M-3x22 | Anchoring screw M-3x22 | 4 | | | | | | | | | |
| | Q161310 | Tuerca exagonal M-3 | Hexagonal nut M-3 | 4 | | | | | | | | | |
| 9 | T303009 | Termostato limitador | Limiter thermostat | 1 | | | | | | | | | |
| | Q232050 | Arandela plana A-8 | Flat washer A-8 | 1 | | | | | | | | | |
| | Q162050 | Tuerca exagonal M-8 | Hexagonal nut M-8 | 1 | | | | | | | | | |
| 10 | T113023 | Filtro de entrada | Inlet filter | 1 | | | | | | | | | |
| 11 | Z743009 | Contactor sirius 3RT10, 16-2APO2 | Sirius 3RT10, 16-2APO2 co | 2 | | | | | | | | | |
| 12 | Z103084 | Guia contactor L=138 | Contactor guide G=138 | 1 | | | | | | | | | |
| | Q412002 | Remache tubular Ø4x7,5 | Tubular rivet Ø4x7.5 | 2 | | | | | | | | | |
| 13 | 3715520 | Canaleta unex 30x60x180 | Unex feed through 30x60x1 | 3 | | | | | | | | | |
| | Q412002 | Remache tubular Ø4x7,5 | Tubular rivet Ø4x7.5 | 6 | | | | | | | | | |
| 14 | 3715520 | Canaleta unex 30x60x510 | Unex feed through 30x60x5 | 1 | | | | | | | | | |
| | Q412002 | Remache tubular Ø4x7,5 | Tubular rivet Ø4x7.5 | 3 | | | | | | | | | |
| 15 | Z103066 | Ventilador 230V., 50/60 Hz. | Fan 230 V, 50/60 Hz | 1 | | | | | | | | | |
| | Q012021 | Tornillo exagonal M-4x10 | Hexagonal screw M-4x10 | 4 | | | | | | | | | |
| | Q242020 | Arandela abanico A-4 | Fan shaped washer A-4 | 4 | | | | | | | | | |
| | Q162020 | Tuerca exagonal M-4 | Hexagonal nut M-4 | 4 | | | | | | | | | |
| 16 | T323004 | Panel cuadro electrico | Switchboard panel | 1 | | | | | | | | | |
| | Q302022 | Arandela plana Ø16xØ6x1,2 | Flat washer Ø16xØ6x1.2 | 2 | | | | | | | | | |
| | Q242030 | Arandela abanico A-6 | Fan shaped washer A-6 | 2 | | | | | | | | | |
| | Q163040 | Tuerca exagonal M-6 | Hexagonal nut M-6 | 2 | | | | | | | | | |
| 17 | T112625 | Base cierre sonda (pasamuros) | Probe closing base (wire pr | 1 | | | | | | | | | |
| 18 | R692812 | Junta pasamuros | Wire protection joint | 1 | | | | | | | | | |
| 19 | Q012021 | Tornillo exagonal M-4x10 | Hexagonal screw M-4x10 | 2 | | | | | | | | | |
| 20 | R662662 | Junta cierre bulbo limitador | Limiting bulb closing joint | 1 | | | | | | | | | |

| MOD. | HORNOS A GAS | ZONA | CUADRO ELECTRICO | PLANO | C-1624 |
|---|---|---|---|---|---|

| ITEM | CODIGO | DENOMINACION | TEXTO | HGC-10 / 21 | | | | | | | | | NOTAS |
|---|---|---|---|---|---|---|---|---|---|---|---|---|---|
| 21 | R662629 | Racord cierre sonda | Probe closing adaptor | 1 | | | | | | | | | |
| 22 | R662683 | Soporte bulbo limitador | Limiting bulb holder | 1 | | | | | | | | | |
| | Q412002 | Remache tubular Ø4x7,5 | Tubular rivet Ø4x7.5 | 3 | | | | | | | | | |
| | | | | | | | | | | | | | |
| | | | | | | | | | | | | | |
| | | | |

| MOD. | HORNOS A GAS | ZONA | CAMBIOS A REALIZAR PARA OBTENER LA VERSION (GAS NATURA | PLANO | C-1622 |
|---|---|---|---|---|---|

| ITEM | CODIGO | DENOMINACION | TEXTO | HGC-10 / 21 | | | | | | | | | NOTAS |
|---|---|---|---|---|---|---|---|---|---|---|---|---|---|
| | | **PIEZAS A ELIMINAR** | **PARTS TO BE REMOVED** | | | | | | | | | | |
| 15 | T305068 | Tobera VK41, Ø4,8 (Buta.-Propa.) | Nozzle VK41, Ø4.8 (Buta.-P | 1 | | | | | | | | | |
| | | **PIEZAS A INTRODUCIR** | **PARTS TO BE INCLUDED** | | | | | | | | | | |
| 15 | T305069 | Tobera VK41, Ø6 (Gas Natural) | Nozzle VK41, Ø6 (NATUR | 1 | | | | | | | | | |

| MOD. | HORNOS A GAS | ZONA | VARIOS | PLANO | |
|---|---|---|---|---|---|

| ITEM | CODIGO | DENOMINACION | TEXTO | HGC-10 / 21 | | | | | | | | | NOTAS |
|---|---|---|---|---|---|---|---|---|---|---|---|---|---|
| | T306500 | Manual de instrucciones | Instructions manual | 1 | | | | | | | | | Español |
| | T306501 | Manual de instrucciones | Instructions manual | 1 | | | | | | | | | Aleman |
| | T306502 | Manual de instrucciones | Instructions manual | 1 | | | | | | | | | Frances |
| | T306503 | Manual de instrucciones | Instructions manual | 1 | | | | | | | | | Ingles |
| | T306504 | Manual de instrucciones | Instructions manual | 1 | | | | | | | | | Italiano |
| | | | | | | | | | | | | | |
| | T343003 | Esquema electrico adhesivo | Adhesive electrical diagram | 1 | | | | | | | | | Plano HC-77081 |
| | T303042 | Leyenda esquema electrico | Electrical diagram legend | 1 | | | | | | | | | Plano HC-76970 |
| | T343004 | Plano electrico de montaje | Assembly electrical diagram | 1 | | | | | | | | | Plano HD-12886 |
| | | | | | | | | | | | | | |
| | T303053 | Union contactores de inversion | Inversion contactors joint | 1 | | | | | | | | | |
| | T303033 | Cableado variador - soplante | Variator wiring - blower | 1 | | | | | | | | | |
| | T303031 | Cableado luz interior | Inner light wiring | 1 | | | | | | | | | |
| | T343006 | Cableado control circuito de leds | Leds circuit control wiring | 1 | | | | | | | | | |
| | T343002 | Instalacion electrica HGC-10/21 | Electrical installation HGC-1 | 1 | | | | | | | | | |
| | T303034 | Cable encendido camara | Chamber ignition cable | 1 | | | | | | | | | |
| | T303035 | Cable detector de llama en camara | Chamber flame detector cat | 1 | | | | | | | | | |
| | | | | | | | | | | | | | |
| | | | | | | | | | | | | | |
| | | | | | | | | | | | | | |
| | | | | | | | | | | | | | |
| | | | | | | | | | | | | | |
| | | | | | | | | | | | | | |
| | | | | | | | | | | | | | |
| | | | | | | | | | | | | | |
| | | | | | | | | | | | | | |
| | | | | | | | | | | | | | |
| | | | | | | | | | | | | | |

# HGC 10 / 11  HGC 10 / 21
# QEASP/ECG-20/11

3 ~ 400V

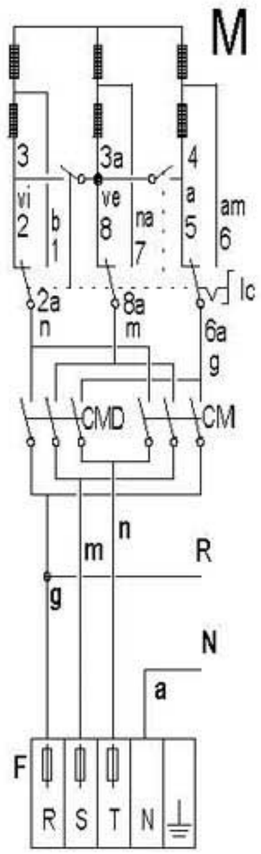


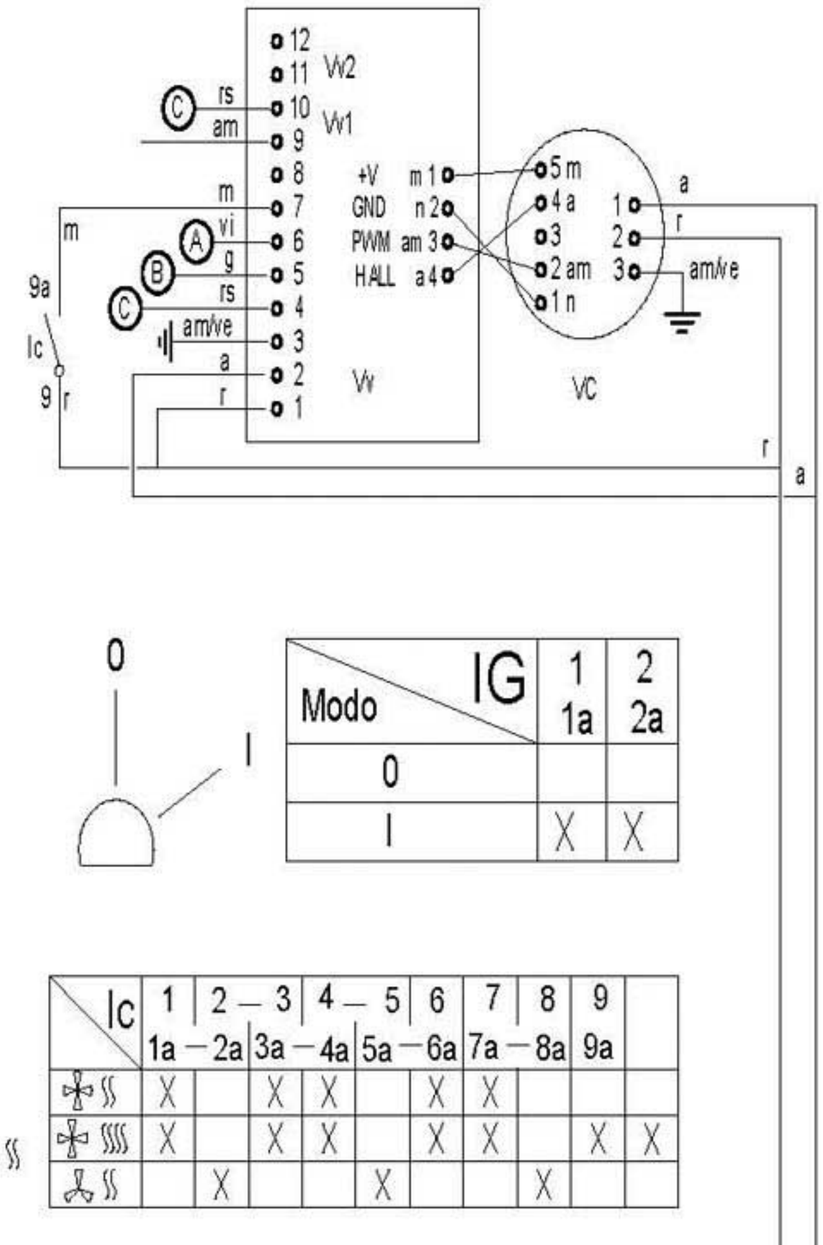





| Modo \ IG | 1<br>1a | 2<br>2a |
|---|---|---|
| 0 | | |
| I | X | X |

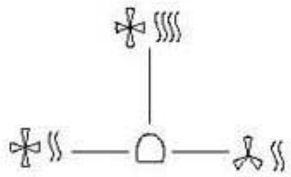

| lc | 1<br>1a – 2a | 2 – 3<br>3a – 4a | 4 – 5<br>5a – 6a | 6<br>7a – 8a | 7<br>8<br>9<br>9a | |
|---|---|---|---|---|---|---|
| | X | X | X | X | | |
| | X | X | X | X | X | X |
| | | X | | X | | |

3 ~ 220V

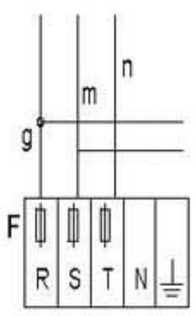


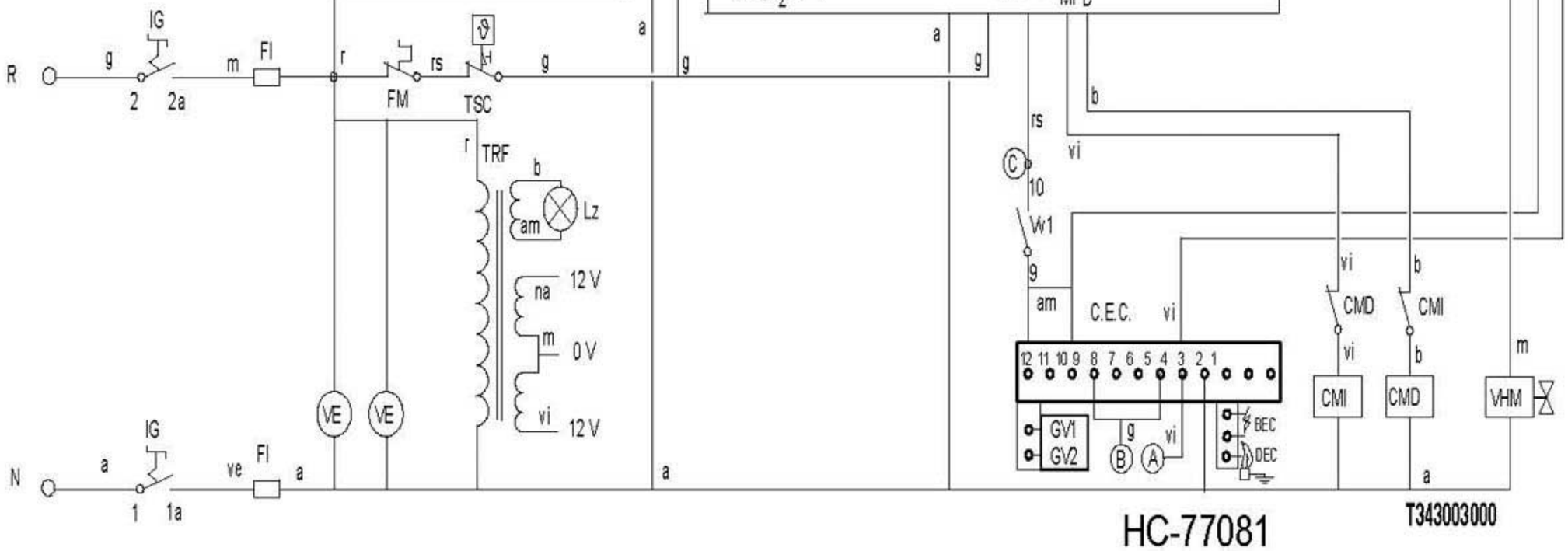





HC-77081

T343003000

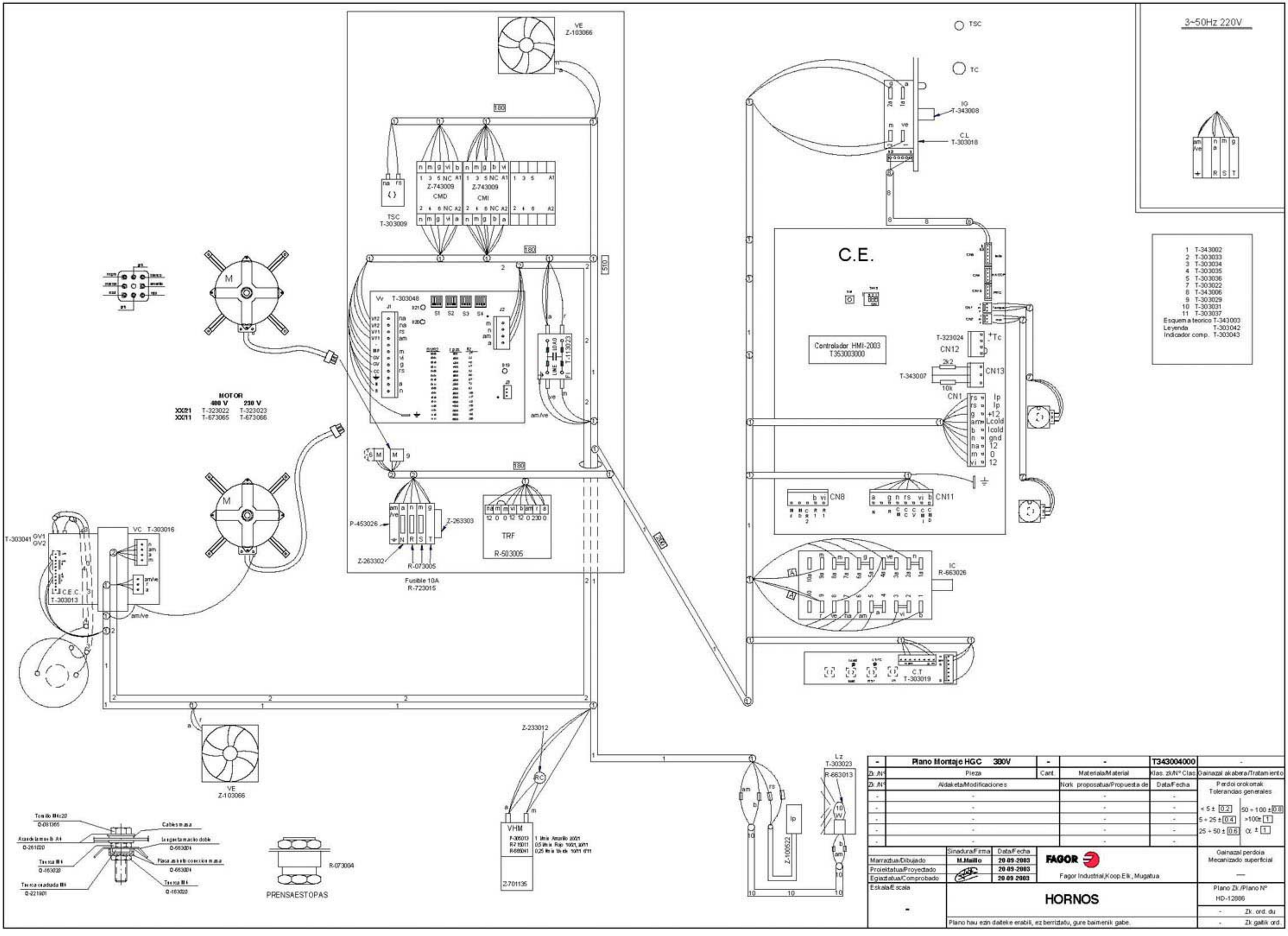

3~50Hz 220V
VE
Z-103066
TSC
T-303009
Z-743009
CMD
CMI
T-303048
T-113023
MOTOR
400 V 230 V
XX/21 T-323022 T-323023
XX/11 T-673065 T-673066
P-453026
Z-263303
Z-263302
R-073005
TRF
R-503005
Fusible 10A
R-723015
VC T-303016
T-303041 GV1 GV2
C.E.C.
T-303013
VE
Z-103066
Z-233012
VHM
Z-701135
R-073004
PRENSAESTOPAS
TSC
TC
IG
T-343008
CL
T-303018
C.E.
Controlador HMI-2003
T353003000
T-323024
CN12
T-343007
CN13
CN1
CN8
CN11
IC
R-663026
C.T
T-303019
Lz
T-303023
R-663013
Z-100522
1 T-343002
2 T-303033
3 T-303034
4 T-303035
5 T-303036
7 T-303022
8 T-343006
9 T-303029
10 T-303031
11 T-303037
Esquema teorico T-343003
Leyenda T-303042
Indicador comp. T-303043
Plano Montaje HGC 380V
T343004000
Pieza
Materiala/Material
Aldaketa/Modificaciones
Nork proposatua/Propuesta de
Data/Fecha
Gainazal akabera/Tratamiento
Perdoi orokorrak
Tolerancias generales
Marraztua/Dibujado
Proiektatua/Proyectado
Egiaztatua/Comprobado
Eskala/Escala
Sinadura/Firma
Data/Fecha
M.Maillo
20-09-2003
FAGOR
Fagor Industrial,Koop.Elk, Mugatua
HORNOS
Gainazal perdoia
Mecanizado superficial
Plano Zk./Plano Nº
HD-12886
Zk. ord. du
Zk.gaitik ord.
Plano hau ezin daiteke erabili, ez berriztatu, gure baimenik gabe.

| | ESPAÑOL | FRANÇAIS | ENGLISH | DEUTSCH | ITALIANO |
|---|---|---|---|---|---|
| BEC = | Bujía Encendido Cámara | Bougie Allumage Chambre | Chamber Spark Plug | Zündkerze Einschalten Garraum | Candela di Accensione Camera |
| BEV = | Bujía Encendido Caldera | Bougie Allumage Chaudière | Boiler Spark Plug | Zündkerze Einschalten Boile | Candela di Accensione Caldaia |
| C.E.C = | Control Combustión Cámara | Contrôle Combustion Chambre | Chamber Combustion Control | Steuerung Verbrennung Garraum | Controllo Combustione Camera |
| C.E.G = | Control Electrónico General | Contrôle Électronique Général | Main Electronic Control | Steuerung Elektronik allgemein | Controllo Elettronico Generale |
| C.E.V = | Control Combustión Caldera | Contrôle Combustion Chaudière | Boiler Combustion Control | Steuerung Verbrennung Boiler | Controllo Combustione Caldaia |
| C.H = | Circuito Humedad | Circuit Humidité | Humidity Circuit | Kreislauf Feuchtigkeit | Circuito Umidità |
| C.L = | Circuito Leds | Circuit LEDs | Led Circuit | Kreislauf LEDs | Circuito Leds |
| C.T = | Circuito Teclado | Circuit Clavier | Keypad Circuit | Kreislauf Tastatur | Cicuito Tastiera |
| CC1, CC2 = | Contactor Resistencia Cámara | Contacteur Élément Chauffant Chambre | Chamber Heating Element Contactor | Schütz Heizwiderstand Garraum | Contattore Resistenza Camera |
| CMD = | Contactor Motor Derecha | Contacteur Moteur Droite | Right Engine Contactor | Schütz Motor rechts | Contattore Motore Destra |
| CMI = | Contactor Motor Izquierda | Contacteur Moteur Gauche | Left Engine Contactor | Schütz Motor links | Contattore Motore Sinistra |
| CR2 = | Rele Arranque | Relais Démarrage | Starting Relay | Relais Anlauf | Relè Accensione |
| CV1, CV2 = | Contactor Resistencias Caldera | Contacteur Élément Chauffant Chaudière | Boiler Heating Element Contactor | Schütz Heizwiderstand Boiler | Contattore Resistenza Caldaia |
| DEC = | Detector Llama Cámara | Détecteur Flamme Chambre | Chamber Flame Detector | Flammendetektor Garraum | Rilevatore di Fiamma Camera |
| DEV = | Detector Llama Caldera | Détecteur Flamme Chaudière | Boiler Flame Detector | Flammendetektor Boiler | Rilevatore di Fiamma Caldaia |
| DN = | Detector Nivel Caldera | Détecteur Niveau Chaudière | Boiler Level Detector | Pegeldetektor Boiler | Rilevatore Livello Caldaia |
| EM = | Encoder Selector Tiempo | Encodeur Sélecteur Temps | Time Selector Encoder | Encoder Zeitwahlschalter | Encoder Selettore Tempo |
| EºC = | Encoder Selector Temperatura | Encodeur Sélecteur Température | Temperature Selector Encoder | Encoder Temperaturwahlschalter | Encoder Selettore Temperatura |
| F = | Fusibles | Fusibles | Fuses | Sicherungen | Fusibili |
| FI = | Filtro Interferencias | Filtre Interférences | Interference Filter | Störungsfilter | Filtro Interferenze |
| FM = | Térmico Motor | Thermique Moteur | Thermal Engine | Thermoschalter Motor | Termico Motore |
| GV1, GV2 = | Electro válvula Gas Cámara | Électrovanne Gaz Chambre | Chamber Gas Solenoid Valve | Elektroventil Gas Garraum | Elettrovalvola Gas Camera |
| GV3, GV4 = | Electro válvula Gas Caldera | Électrovanne Gaz Chaudière | Boiler Gas Solenoid Valve | Elektroventil Gas Boiler | Elettrovalvola Gas Caldaia |
| IC = | Selector Velocidad Potencia | Sélecteur Vitesse Puissance | Power Speed Selector | Wahlschalter Geschwindigkeit Leistung | Selettore Velocità Potenza |
| IG = | Interruptor General | Interrupteur Général | Main Switch | Hauptschalter | Interruttore generale |
| IL = | Interruptor Seguridad Lavado | Interrupteur Sécurité Lavage | Washing Safety Switch | Sicherheitsschalter Waschen | Iterruttore Sicurezza Lavaggio |
| Ip = | Interruptor Seguridad Puerta | Interrupteur Sécurité Porte | Door Safety Switch | Sicherheitsschalter Tür | Iterruttore Sicurezza Porta |
| K1,K2,CK1,CK2= | Rele Resistencia | Relais Élément Chauffant | Heating Element Relay | Relais Heizwiderstand | Relè Resistenza |
| Lz = | Luz Interior | Éclairage Intérieur | Inner Light | Innenbeleuchtung | Luce Interna |
| M, M1, M2 = | Motor Turbina | Moteur Turbine | Turbine Engine | Motor Turbine | Motore Turbina |
| Mch = | Motor Chimenea | Moteur Cheminée | Stack Engine | Motor Abluftkamin | Motore Canna |
| Md = | Motor Válvula | Moteur vanne | Valve Engine | Motor Ventil | Motore Valvola |
| MBA = | Bomba Lavado | Pompe Lavage | Washing Pump | Waschenpumpe | Pompa lavaggio |
| Mb = | Interruptor Micro Bajada | Microrupteur Descente | Drop Microswitch | Mikroschalter Senken | Iterruttore Micro Discesa |
| Ms = | Interruptor Micro Subida | Microrupteur Montée | Rise Microswitch | Mikroschalter Heben | Iterruttore Micro Salita |
| PF = | Potenciómetro Selector Funciones | Potentiomètre Sélecteur Fonctions | Functions Selector Potentiometer | Potentiometer Funktionswahlschalter | Potenziometro Selettore Funzioni |
| PRG = | Programador | Programmateur | Programmer | Programmiervorrichtung | Programmatore |
| RC = | Resistencias Cámara | Éléments Chauffants Chambre | Chamber Heating Element | Heizwiderstände Garraum | Resistenze Camere |
| RV = | Resistencias Caldera | Éléments Chauffants Chaudière | Boiler Heating Element | Heizwiderstände Boiler | Resistenze Caldaia |
| Tc = | Sonda Cámara | Sonde Chambre | Chamber Probe | Sonde Garraum | Sonda Camera |
| TCN = | Termostato Condensación | Thermostat Condensation | Condensation Thermostat | Thermostat Kondensierung | Termostato Condensazione |
| Tg = | Sonda Caldera | Sonde Chaudière | Boiler Probe | Sonde Boiler | Sonda Caldaia |
| TH = | Sonda Humedad | Sonde Humidité | Humidity Probe | Sonde Feuchtigkeit | Sonda Umidità |
| Tn = | Sonda Núcleo | Sonde Noyau | Core Probe | Kerntemperaturmessonde | Sonda Nucleo |
| TRF = | Transformador | Transformateur | Transformer | Transformator | Trasformatore |
| TSC = | Termostato Seguridad Cámara | Thermostat Sécurité Chambre | Chamber Safety Thermostat | Sicherheitsthermostat Garraum | Termostato Sicurezza Camera |
| TSV = | Termostato Seguridad Caldera | Thermostat Sécurité Chaudière | Boiler Safety Thermostat | Sicherheitsthermostat Boiler | Termostato Sicurezza Caldaia |
| Tv = | Sonda Vapor | Sonde Vapeur | Steam Probe | Sonde Dampf | Sonda Vapore |
| VAC = | Bomba Vaciado | Pompe Vidange | Vacuum Pump | Ablasspumpe | Pompa scarico |
| VAcl = | Electro válvula Aclarado | Électrovanne Rinçage | Rinsing Solenoid Valve | Elektroventil Klarspülen | Elettrovalvola Risciacquo |
| VC = | Ventilador Soplante | Ventilateur Soufflant | Blowing Fan | Ventilator Gebläse | Ventilatore Soffiante |
| VCN = | Electro válvula Condensación | Électrovanne Condensation | Condensation Solenoid Valve | Elektroventil Kondensierung | Elettrovalvola Condensazione |
| VDV = | Electro válvula Llenado Caldera | Électrovanne Remplissage Chaudière | Chamber Filling Solenoid Valve | Elektroventil Füllung Boiler | Elettrovalvola di Riempimento Caldaia |
| VE = | Ventilador Cuadro Eléctrico | Ventilateur Tableau Électrique | Fan Switchboard | Ventilator Elektrotafel | Ventilatore Quadro Elettrico |
| VHM = | Electro válvula Humidificador | Électrovanne Humidificateur | Humidifier Solenoid Valve | Elektroventil Befeuchtungsvorrichtung | Elettrovalvola Umidificatore |
| VLav = | Electro válvula Lavado | Électrovanne Lavage | Washing Solenoid Valve | Elektroventil Waschen | Elettrovalvola Lavaggio |
| Vv = | Variador Velocidad | Variateur Vitesse | Speed Variator | Geschwindigkeitsregler | Variatore di Velocità |
| **COLOR** | COLORES | COULEURS | **COLOUR** | **FARBEN** | COLORE |
| Va = | Azul | Bleu | Blue | Blau | Blu |
| am = | Amarillo | Jaune | Yellow | Gelb | Giallo |
| am/ve = | Amarillo/verde | Jaune / vert | Yellow / green | Gelb/grün | Giallo/verde |
| b = | Blanco | Blanc | White | Weiß | Bianco |
| g = | Gris | Gris | Grey | Grau | Grigio |
| m = | Marrón | Marron | Brown | Braun | Marrone |
| n = | Negro | Noir | Black | Schwarz | Nero |
| na = | Naranja | Orange | Orange | Orange | Arancio |
| r = | Rojo | Rouge | Red | Rot | Rosso |
| rs = | Rosa | Rose | Pink | Rosa | Roseo |
| ve = | Verde | Vert | Green | Grün | Verde |
| vi = | Violeta | Violet | Purple | Violett | Viola |