KROMO	TABLE KI3510	REV 01
DISHWASHER KP 400		

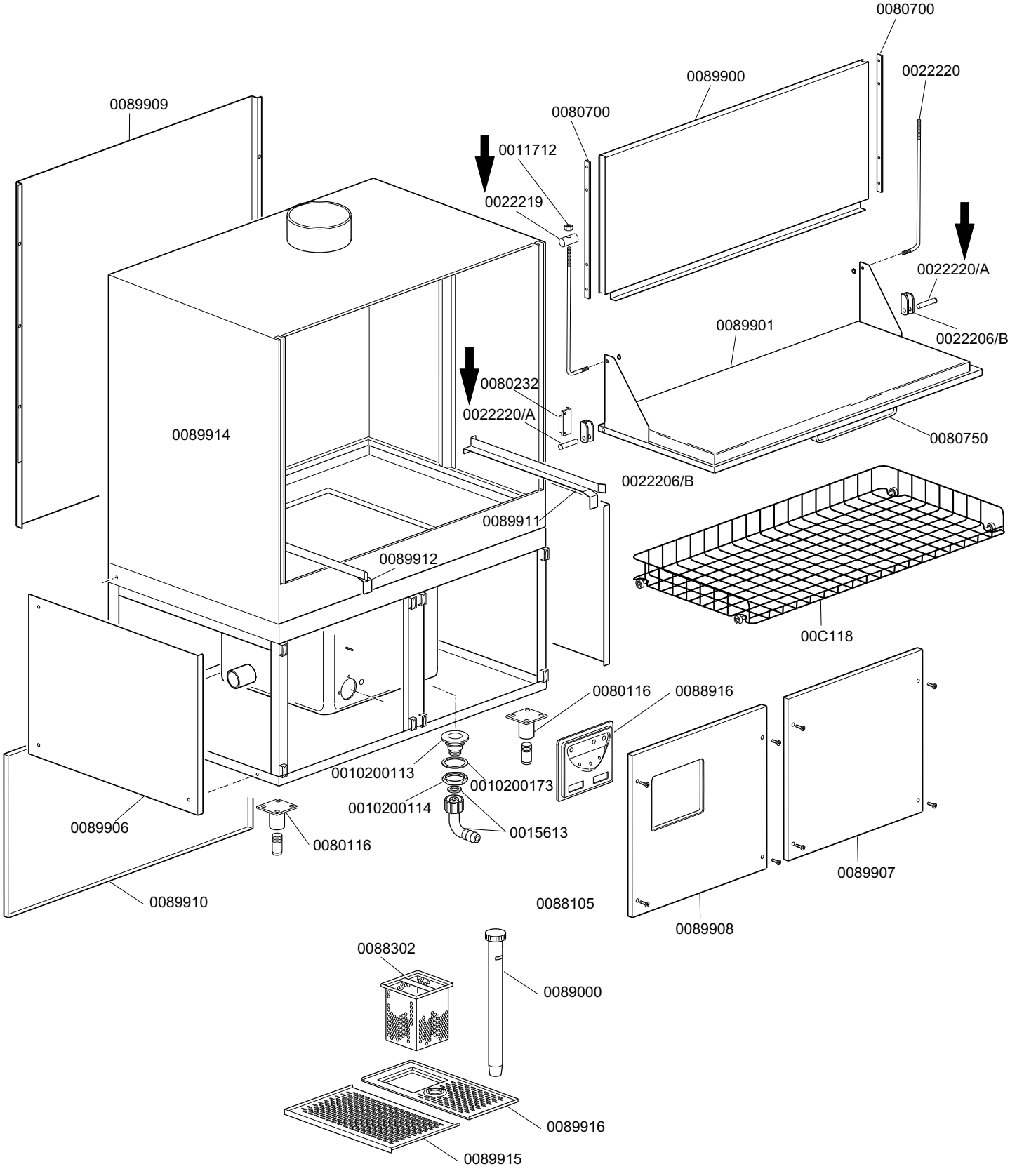

DISHWASHER KP400			TABLE KI3510
CODE	**DESCRIPTION**	**CODE**	**DESCRIPTION**
0010200113	Drain pipe		
0010200114	Drain pipe nut		
0010200173	75x58x2 gasket		
0011712	Self-locking nut M6		
0015613	Nylon drain elbow		
0022206/B	Door hinge		
0022219	Door pins		
0022220	Door rod		
0022220/A	Door rods and stay rods		
0080116	Octagonal 2" m.65 foot		
0080232	Door magnet		
0080700	Door guide		
0080750	Stainless steel handle		
0088105	Overlow plug		
0088302	Tank trap filter		
0088916	Control panel		
0089000	Overflow device		
0089900	Upper door		
0089901	Lower door		
0089906	Side panel		
0089907	Right under-door panel		
0089908	Left under-door panel		
0089909	Upper supporting element		
0089910	Lower supporting element		
0089911	Right rack runner bracket		
0089912	Left rack runner bracket		
0089914	Complete structure		
0089915	Rear filter		
0089916	Front filter with coupling		
00C118	Stainless steel rack on wheels		

KROMO	TABLE KI3515	REV 01

DISHWASHER KP 400

From serial Nr 00013429 on

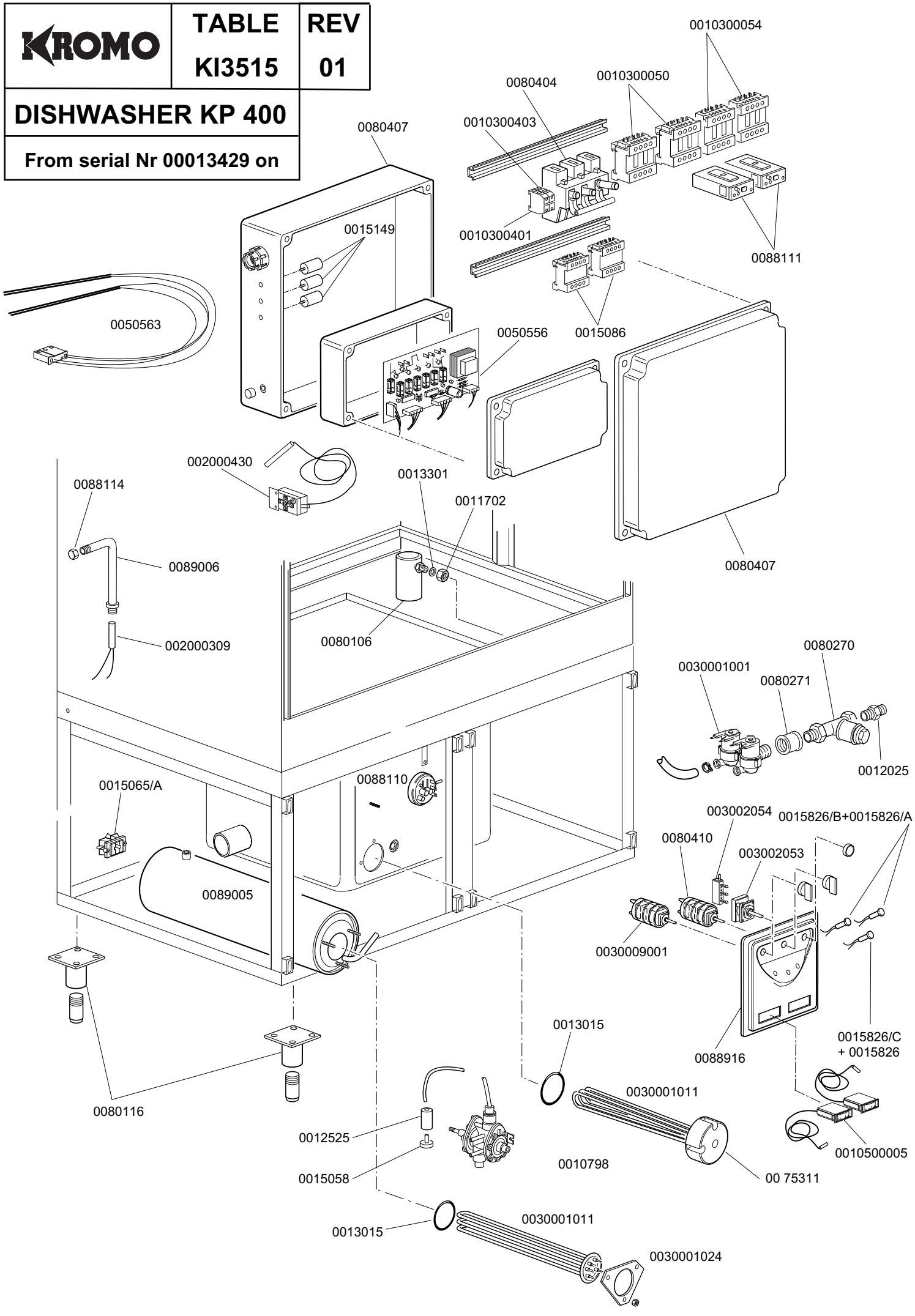

DISHWASHER KP400			TABLE KI3515
CODE	**DESCRIPTION**	**CODE**	**DESCRIPTION**
0010300050	Electromagnetic switch 25A/12A 4NA 230V		
0010300054	Electromagnetic switch 25A/16A 4NA 230V		
0010300401	Yellow-green 6sq.mm.terminal		
0010300403	Terminal 6sq.mm.		
0010500005	Horizontal thermometer		
0010798	Rinser additive measurer		
0011702	Stainless steel M8 nut		
0012025	Nipples 3/4 MM		
0012525	Counterweight for small filter		
0013015	OR 6225 gasket		
0013301	14x8x1,5 gasket		
0015058	Small suction filter		
0015065/A	Cable sheath		
0015086	Electromagnetic switch 230V		
0015149	Interference suppressor filter F3		
0015826	Trasparent lamp 220V		
0015826/A	Trasparent lamp 12-24V		
0015826/B	Green lamp		
0015826/C	Red lamp		
002000309	Economizer magnet		
002000430	Safety thermostat		
0030001001	Double solenoid valve		
0030001011	Resistance 8,5 Kw 230V		
0030001024	Resistance flange		
0030009001	Selector 0-1		
003002053	Matt green push-button		
003002054	Rectangular 1NO contact		
0050556	Electronic timer 3/6/9 minutes		
0050563	Electronic card probe		
0075311	Resistance casing		
0080106	Stainless steel air retainer		
0080116	Octagonal 2" m.65 foot		
0080270	Water load filter		
0080271	Reduction 1" M-3/4 F		
0080404	Three-phase fuse holder		
0080407	Waterproof box		
0080410	Selector with 5 positions		
0088110	Manostat		
0088111	Thermal relay		
0088114	Hexagonal plug 12 mm.		
0088916	Control panel		
0089005	Boiler		
0089006	Magneti holder bulb		

KROMO	TABLE KI3530	REV 01

DISHWASHER KP 400

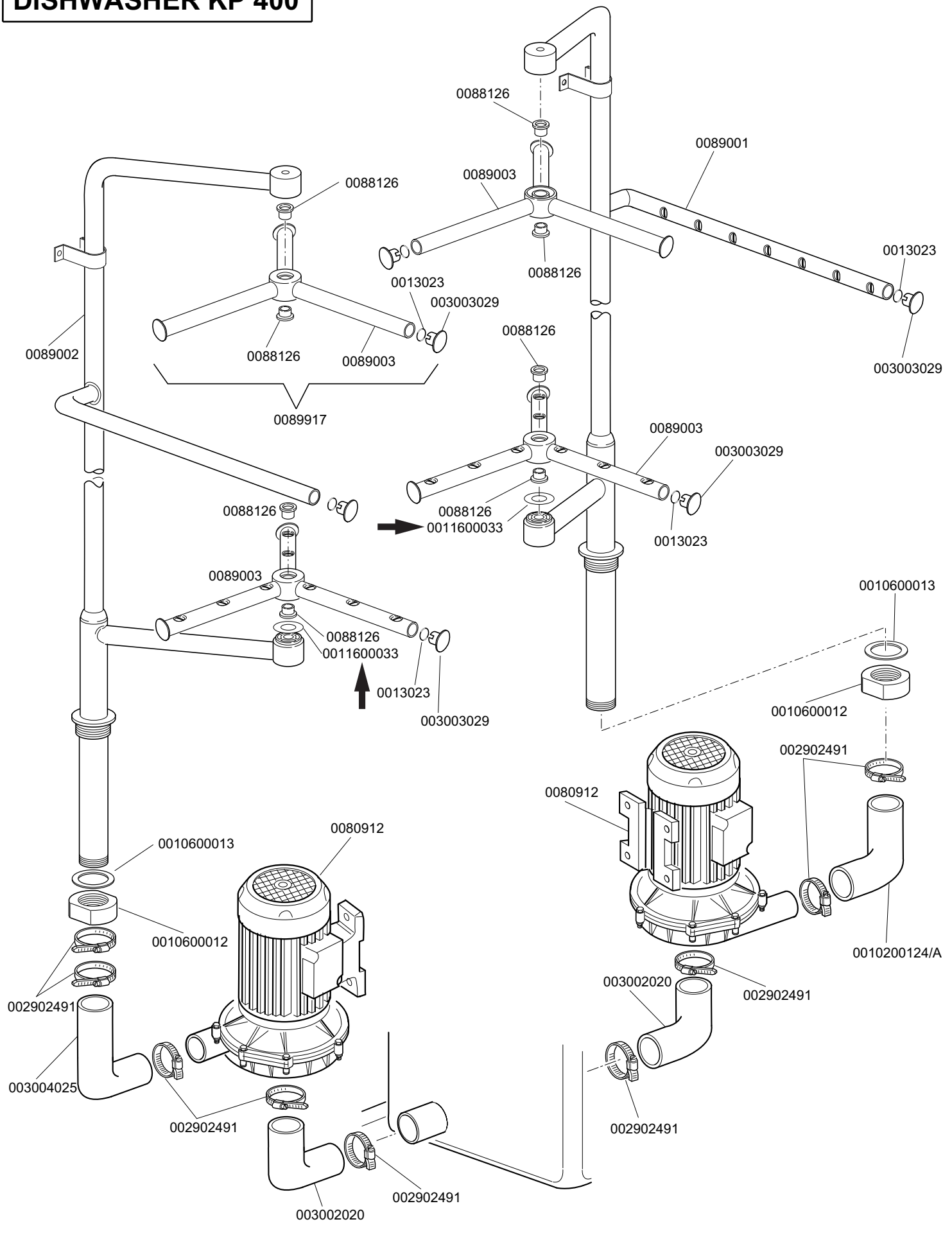

DISHWASHER KP400			TABLE KI3530
CODE	**DESCRIPTION**	**CODE**	**DESCRIPTION**
0010200124/A	Suction elbox		
0010600012	Flat nut for fixing ramp		
0010600013	Washing ramp gasket		
→ 0011600033	Flow reduction ring		
0013023	OR 131 Gasket		
002902491	Stainless steel clamp 60-80		
003002020	Coupling EPDM d.60		
003003029	Plug for washing tube		
003004025	L-shaped delivery coupling 50/50		
0080912	Pump 3,6HP		
0088126	Teflon bush for hub		
0089001	Right washing ramp		
0089002	Left washing ramp		
0089003	Upper-lower washing unit		
0089917	Washing group		

KROMO	TABLE KI3540	REV 01

DISHWASHER KP 400

From serial Nr.00026963 on

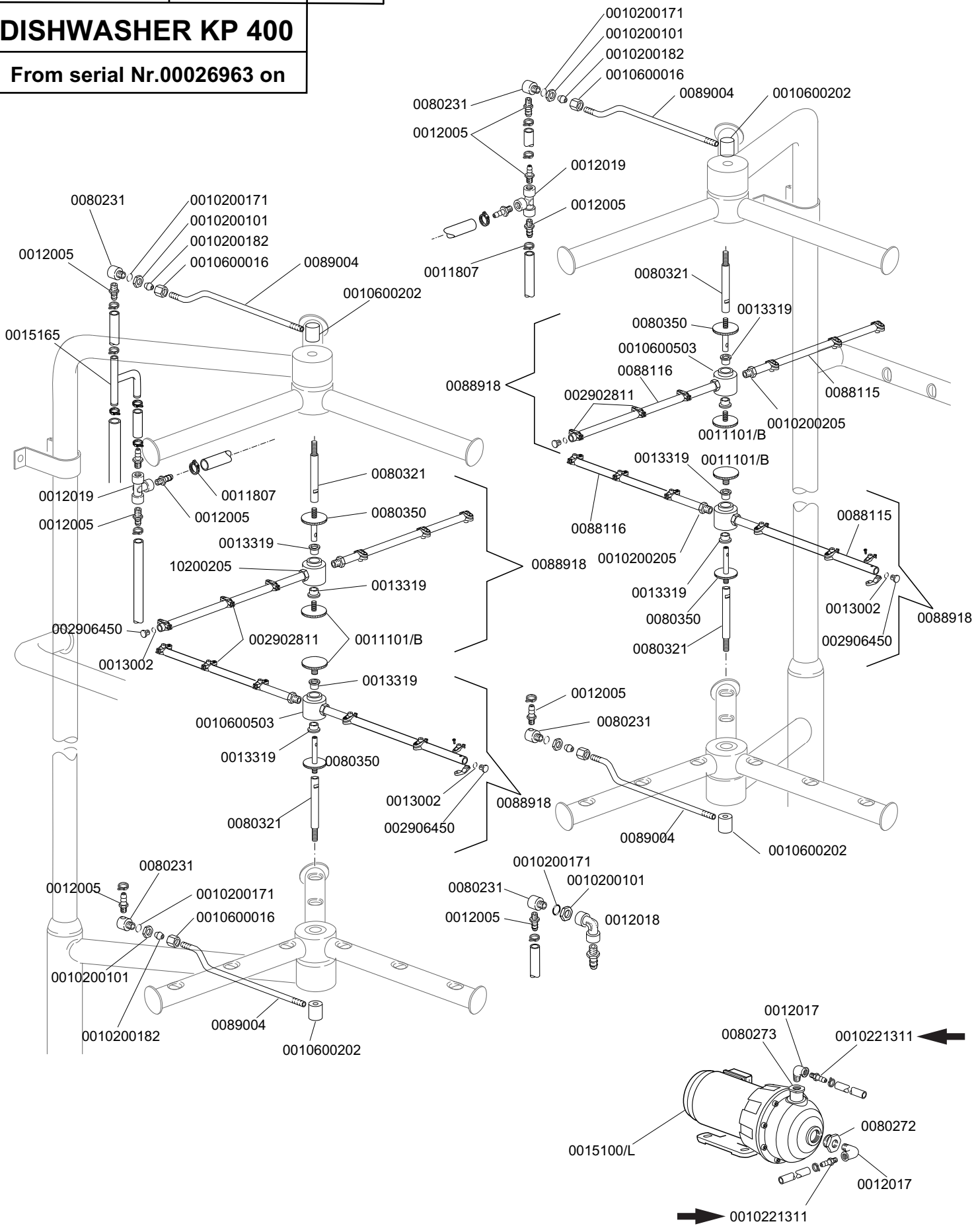

DISHWASHER KP400

TABLE
KI3540

CODE	DESCRIPTION	CODE	DESCRIPTION
0010200101	Stainless steel fitting nut 3/8		
0010200171	25x17x2 gasket		
0010200182	Biconic washer 12		
0010200205	Stainless steel nut M12x1		
0010221311	Rubber holder 3/8" G Ø 12		
0010600016	Rinsing coupling 3/8"nut		
0010600202	Stainless steel rinsing spout		
0010600503	Stainless steel hub for rinsing unit		
0011101/B	Fastening screws for assemblies M8x35		
0011807	Stainless steel clamp 12-22		
0012017	Elbow fitting 3/8 M-F		
0012018	Elbow fitting 3/8 F-F		
0012019	Union tee 3/8 F-F-F		
0013002	OR R6 gasket		
0013319	Sliding washer PTFE+CB h11		
0015100/L	Pump 0,6KW 230V		
0015165	3-Way joint d.13		
002902811	Rinsing spout		
002906450	Rinsing unit plug		
0080231	Inlet fitting		
0080272	1" Reduction 1/4M-3/8F		
0080273	1" Reduction M-3/8F		
0080321	Top axle		
0080350	Rinse axis		
0088115	Right rinsing pipe		
0088116	Left rinsing axis		
0088918	Complete rinsing unit		
0089004	Rinsing pipe		