/A=PIANO CON ALZATINA
/A=SHELF+RIDGE
/A=PLATTE MIT RUECKLEISTE
/A=RAYON AVEC ETAGERE
/A=TOPE CON ELEV.

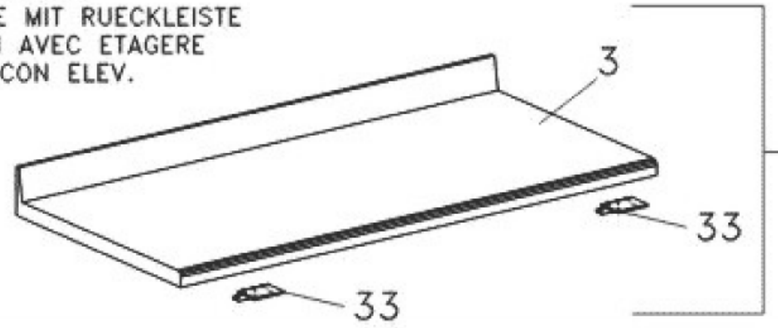


/X=PIANO SENZA ALZATINA
/X=SHELF WITHOUT RIDGE
/X=PLATTE OHNE RUECKLEISTE
/X=RAYON SANS ETAGERE
/X=TOPE SIN ELEV.

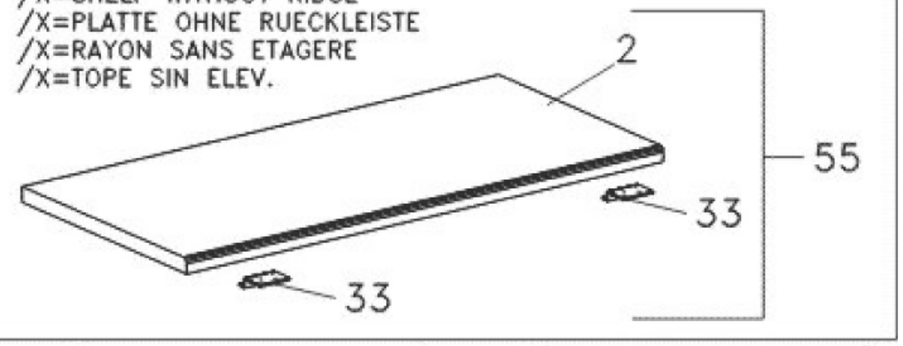


SOLO PER PORTE
DOORS ONLY
NUR FUER TUER
SEULEMENTO POUR PORTES
SOLO PUERTAS

SOLO PER CASSETTI
DRAWERS ONLY
NUR FUER SCHBLADEN
SEULEMENTO POUR TIROIRS
SOLO GAVETAS

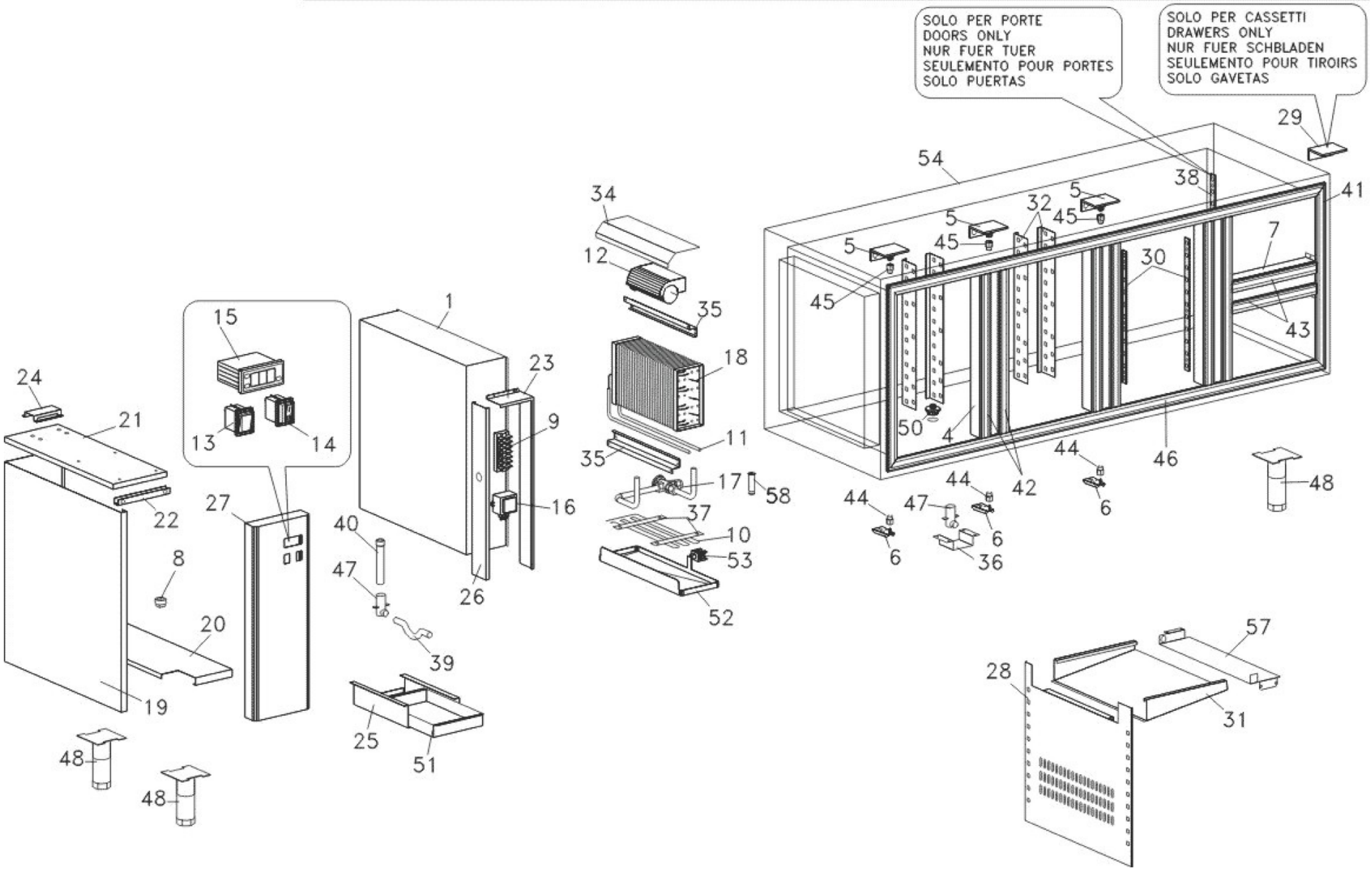

# Modello Typ Model Modele Modelo

| | | WM1A<br>WM1A/X<br>WM1A/A | WM1A/2<br>WM1A/2X<br>WM1A/2A | WM1B<br>WM1B/X<br>WM1B/A | WM1B/2<br>WM1B/2X<br>WM1B/2A | WM1B/4<br>WM1B/4X<br>WM1B/4A | WM1C<br>WM1C/X<br>WM1C/A | WM1C/2<br>WM1C/2X<br>WM1C/2A | WM1C/4<br>WM1C/4X<br>WM1C/4A | WM1C/6<br>WM1C/6X<br>WM1C/6A |
|---|---|---|---|---|---|---|---|---|---|---|
| Num. Cassetti<br>Schublad<br>Drawers<br>Tiroirs<br>Gabetas | 1/2 | --- | 2 | --- | 2 | 4 | --- | 2 | 4 | 6 |
| | 1/3 | --- | --- | --- | --- | --- | --- | --- | --- | --- |
| | 2/3 | --- | --- | --- | --- | --- | --- | --- | --- | --- |

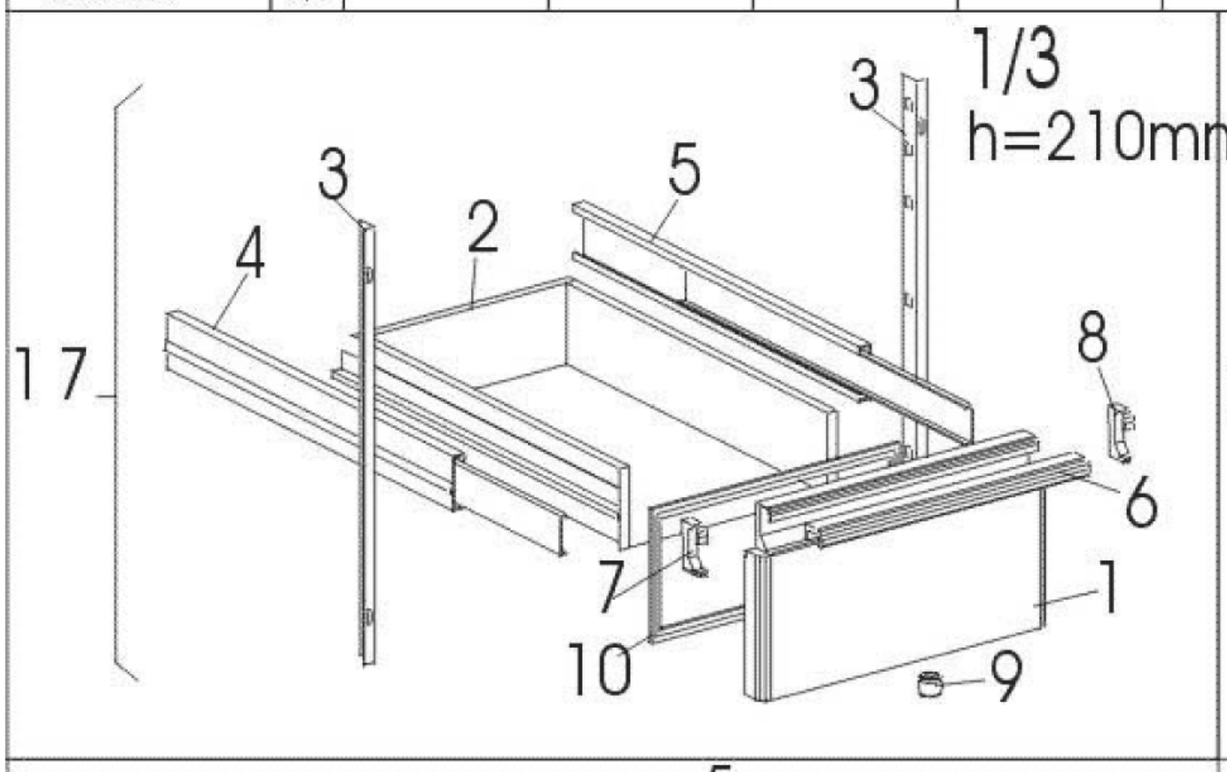


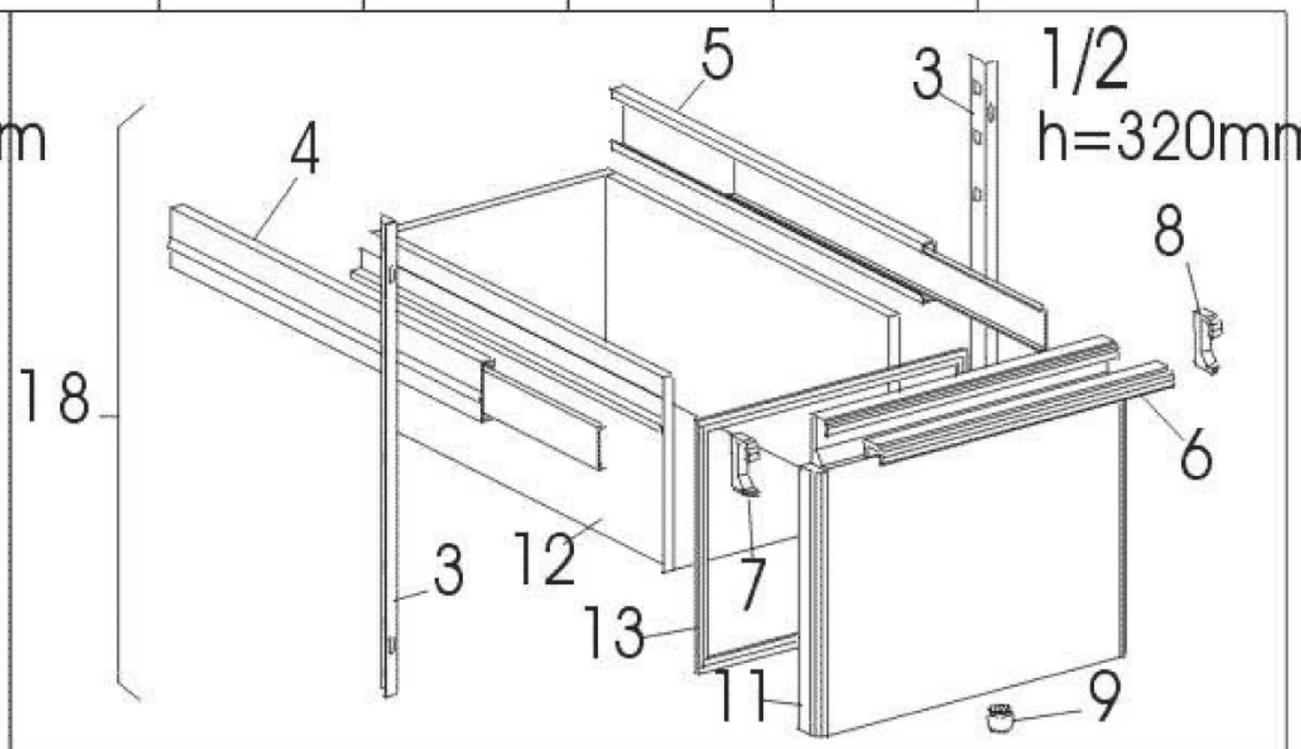


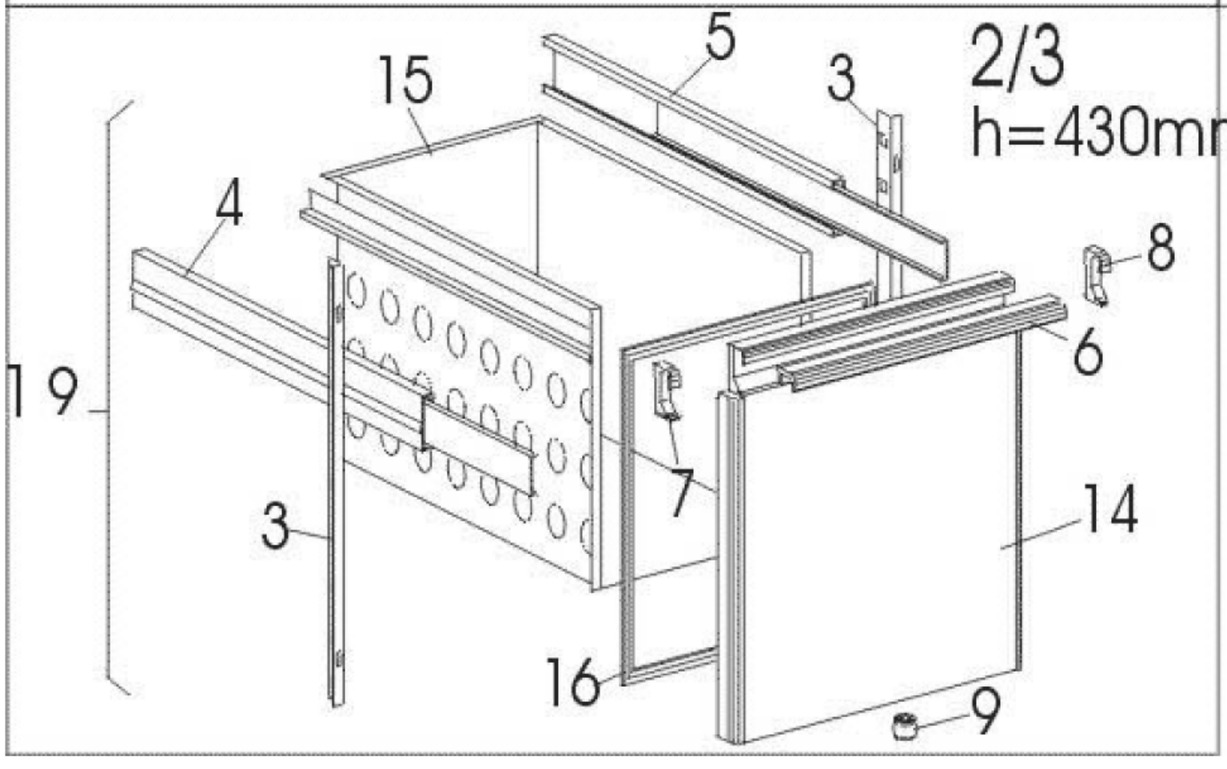

# Modello Typ Model Modele Modelo

| | | WM1A<br>WM1A/X<br>WM1A/A | WM1A/2<br>WM1A/2X<br>WM1A/2A | WM1B<br>WM1B/X<br>WM1B/A | WM1B/2<br>WM1B/2X<br>WM1B/2A | WM1B/4<br>WM1B/4X<br>WM1B/4A | WM1C<br>WM1C/X<br>WM1C/A | WM1C/2<br>WM1C/2X<br>WM1C/2A | WM1C/4<br>WM1C/4X<br>WM1C/4A | WM1C/6<br>WM1C/6X<br>WM1C/6A |
|---|---|---|---|---|---|---|---|---|---|---|
| Porte<br>Ture<br>Doors<br>Portes<br>Portas | SX | 1 | 1 | 2 | 2 | 1 | 3 | 3 | 2 | 1 |
| Gabetas | DX | 1 | --- | 1 | --- | --- | 1 | --- | --- | --- |

