DESPIECE TECNICO / SPARE PARTS BOM

# Hornos a gas
# Fours à gaz
# Gas ovens
# Gas heissluftdämpfer
# Forni a gas
# Fornos a gás

## Modelos / Models:

**AG-201**
**ACG-201**
**APG-201**

***Septiembre 2012 September***
***Revisado Enero 2015 January Revised***

FAGOR

FAGOR INDUSTRIAL

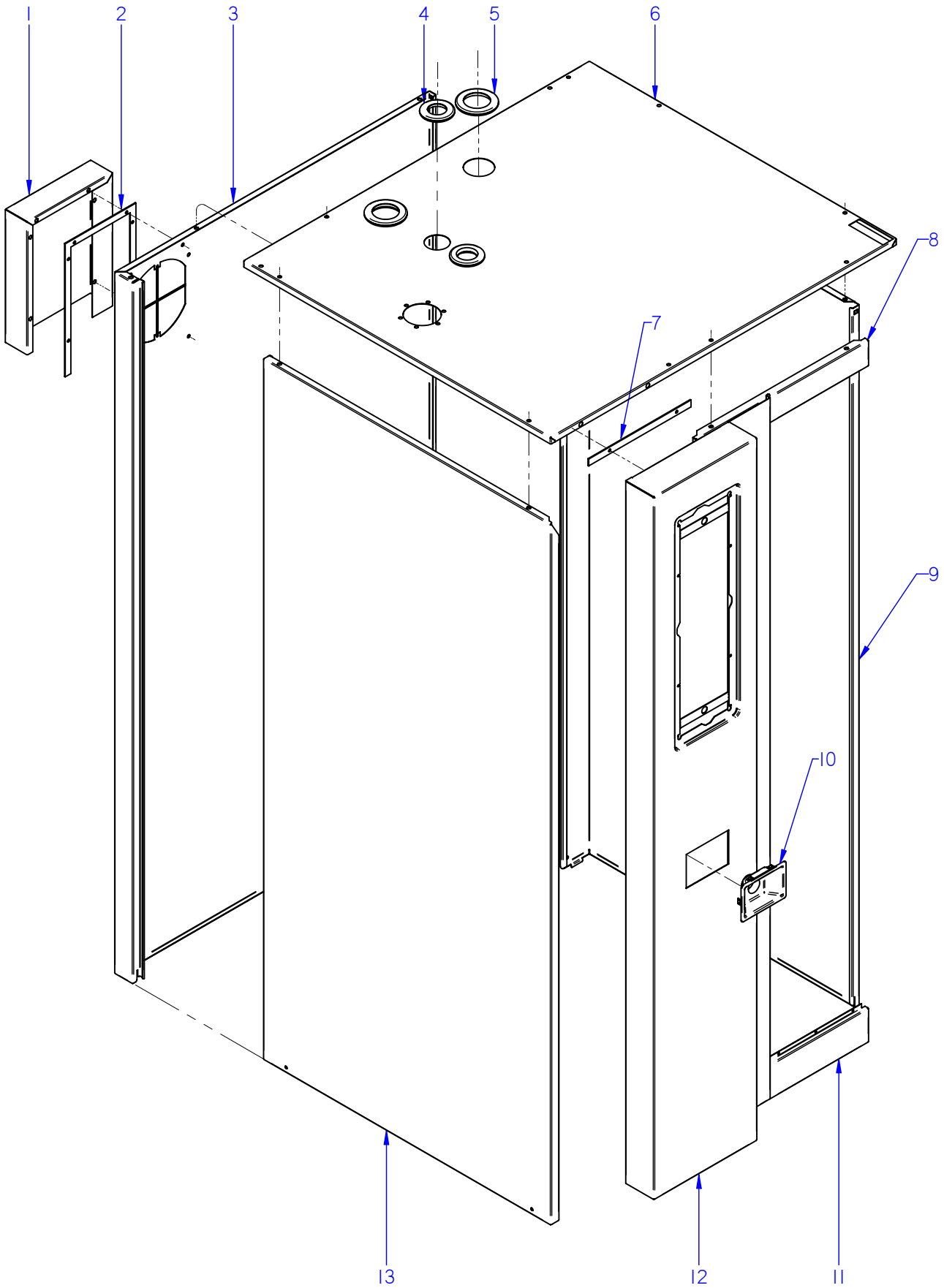


ITEM MARCADO EN COLOR = REPUESTO RECOMENDADO
COLOURED ITEM = RECOMMENDED SPARE PART

| Nº plano / N º plane | Firma | Fecha / Date | Denominación / Denomination: MUEBLE / UNIT | Lamina / Sheet | |
|---|---|---|---|---|---|
| C-3072 | | 2012-09 | HORNOS AG; ACG; APG-201 | 1 | Fagor Industrial S.Coop. FAGOR Oñate |

| MOD. | HORNOS / OVEN | ZONA / ZONE | MUEBLE / UNIT | PLANO DIAGRAM | C-3072 |
|---|---|---|---|---|---|

| ITEM | CODIGO REFERENCE | DENOMINACION | DENOMINATION | ACG-201 | AG-201 | APG-201 | | | | | | ELIMINADO ELIMINATED | INTRODUCID. INTRODUCED | NOTAS |
|---|---|---|---|---|---|---|---|---|---|---|---|---|---|---|
| 1 | 12022556 | CHAPA SEPARACION IPX5 20-21 | SEPARATION PLATE IPX5 20-21 | 1 | 1 | 1 | | | | | | 01.11.12 | | |
| 1 | 12022557 | CHAPA SEPARACI. IPX5 20 SOLD. | SEPARAT. PLATE IPX5 20 WEL. | 1 | 1 | 1 | | | | | | | 01.11.12 | |
| | 12010163 | REMACHE EXAGONAL M.5 | HEXAGONAL RIVET M.5 | 12 | 12 | 12 | | | | | | | | |
| 2 | 12024081 | JUNTA IPX5 20-21 | SEAL IPX5 20-21 | 1 | 1 | 1 | | | | | | | | |
| | 12009944 | ARANDELA A5 | FLAT WASHER A.5 | 6 | 6 | 6 | | | | | | | | |
| | 12009890 | ARANDELA ABANICO A5 A.304 | FAN SHAPED WASHER A.5 | 6 | 6 | 6 | | | | | | | | |
| | 12010238 | TORNILLO EXAGONAL M5X10 | HEXAGONAL BOLT M5X10 | 6 | 6 | 6 | | | | | | | | |
| 3 | 12041103 | PANEL POSTERIOR 201 ADV | REAR PANEL 201 ADV | 1 | 1 | 1 | | | | | | | | |
| 4 | 12039535 | PASAMUROS Ø 38 | Ø 38 BUSHING | 2 | 2 | 2 | | | | | | | | |
| 5 | 12024231 | PASAMUROS CHIMENEA 10100336 | FEED THROUGH FLUE PIPE 1010 | 2 | 2 | 2 | | | | | | | | |
| | 12010242 | TORNIL. APLASTADO M5X13 A 304 | FLAT SCREW M.5x13 | 8 | 8 | 8 | | | | | | | | |
| 6 | 12044454 | PANEL SUPERIOR SOL. ACG 201 | TOP PANEL ACG 201 SOLDIER | 1 | _ | _ | | | | | | | | |
| 6 | 12044427 | PANEL SUPERIOR SOLD. AG 201 | TOP PANEL AG 201 SOLDIER | _ | 1 | 1 | | | | | | | | |
| 7 | 12041319 | JUNTA PORTAMANDOS 201 ADV | CONTROL PANEL SEAL 201 ADV | 1 | 1 | 1 | | | | | | 28.03.14 | | |
| 8 | 12041125 | PANEL FRONTAL SUPE. 201 ADV | UPPER FRONT PANEL 201 ADV | 1 | 1 | 1 | | | | | | | | |
| | 12010163 | REMACHE EXAGONAL M.5 | HEXAGONAL RIVET M.5 | 2 | 2 | 2 | | | | | | | | |
| | 12010065 | REMACHE AVINOX Ø3.2X6MM | AVINOX Ø3.2X6MM RIVET | 7 | 7 | 7 | | | | | | | | |
| 9 | 12041123 | PANEL EXTERIOR DCHO 201 ADV | RIGHT PANEL 201 ADV | 1 | 1 | 1 | | | | | | | | |
| 10 | 12041736 | EMBELLECEDOR DUCHA AD | SHOWER TRIM AD | 1 | 1 | 1 | | | | | | 28.03.14 | | |
| 11 | 12041126 | PANEL FRONTAL INFER. 201 ADV | LOWER FRONT PANEL 201 ADV | 1 | 1 | 1 | | | | | | | | |
| | 12010065 | REMACHE AVINOX Ø3.2X6MM | AVINOX Ø3.2X6MM RIVET | 7 | 7 | 7 | | | | | | | | |
| 12 | 12043998 | PANEL PORTAMANDOS ACE 201 | CONTROL PANEL ACE 201 | 1 | _ | _ | | | | | | 01.10.13 | | |
| 12 | 12095164 | PANEL PORTAMANDOS AC 201 | CONTROL PANEL AC 201 | 1 | _ | _ | | | | | | 28.03.14 | 02.10.13 | |
| 12 | 12097893 | MOD PORTAMANDO 201 ACE | CONTROL PANEL 201 ACE | 1 | _ | _ | | | | | | | 28.03.14 | |
| 12 | 12041099 | PANEL PORTAMANDOS AE 201 | CONTROL PANEL AE 201 | _ | 1 | _ | | | | | | 01.10.13 | | |
| 12 | 12043844 | PANEL PORTAMANDOS APE 201 | CONTROL PANEL APE 201 | _ | 1 | _ | | | | | | 28.03.14 | 01.10.13 | |
| 12 | 12043844 | PANEL PORTAMANDOS APE 201 | CONTROL PANEL APE 201 | _ | _ | 1 | | | | | | 28.03.14 | | |
| 12 | 12097708 | MOD PORTAMAN. 201 ADV- PLUS | CONTROL PANEL 201 ADV- PLU | _ | 1 | 1 | | | | | | | 28.03.14 | |
| 13 | 12041157 | PANEL EXT. IZQUIERDO 201 ADV | REAR LEFT PANEL 201 ADV | 1 | 1 | 1 | | | | | | | | |
| | 12010163 | REMACHE EXAGONAL M.5 | HEXAGONAL RIVET M.5 | 3 | 3 | 3 | | | | | | | | |
| | 12010242 | TORNIL. APLASTADO M5X13 A 304 | FLAT SCREW M.5x13 | 4 | 4 | 4 | | | | | | | | |

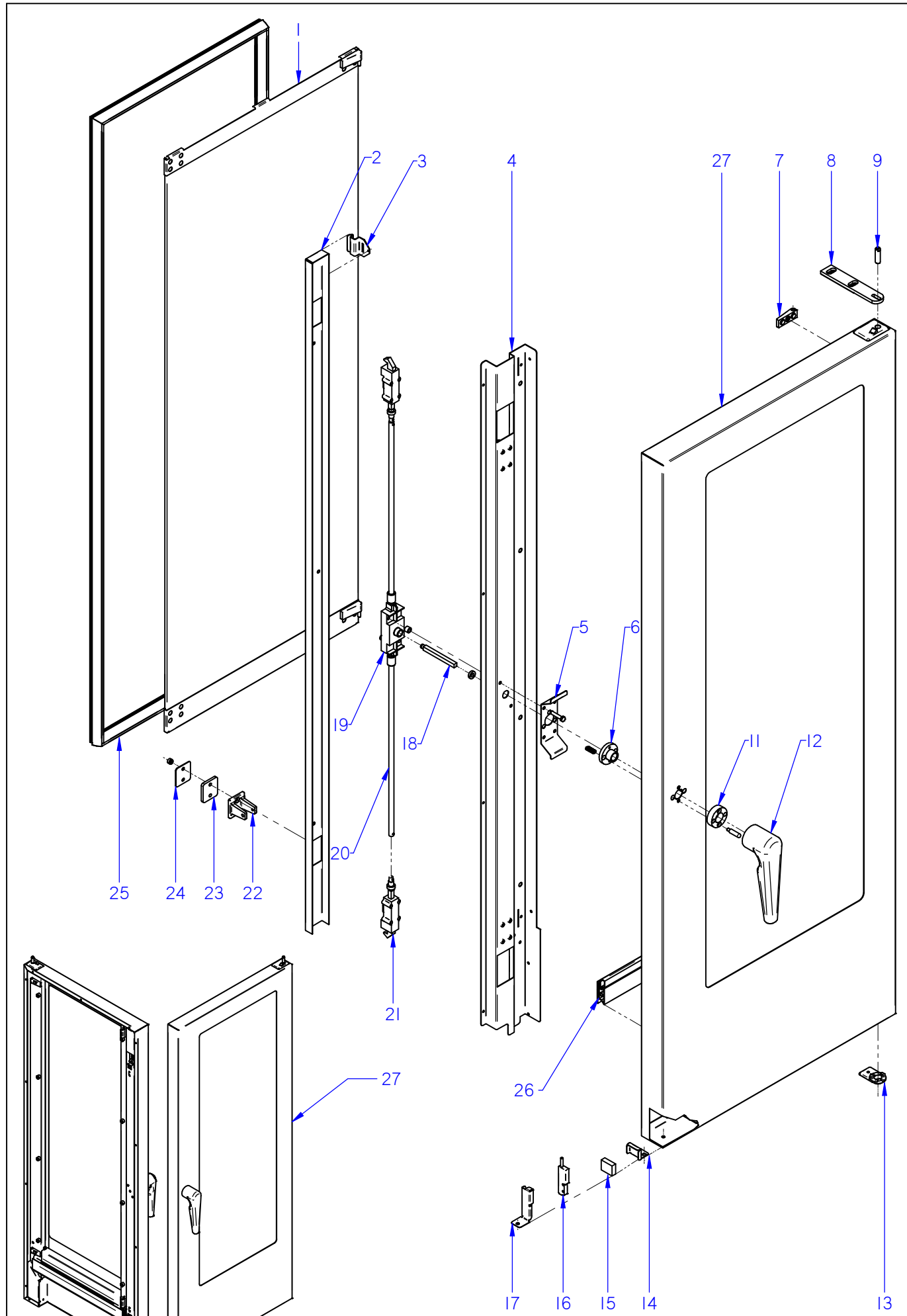


ITEM MARCADO EN COLOR = REPUESTO RECOMENDADO
COLOURED ITEM = RECOMMENDED SPARE PART

| Nº plano / N º plane | Firma | Fecha / Date | Denominación / Denomination: PUERTA / DOOR | Lamina / Sheet | |
|---|---|---|---|---|---|
| C-3073 | | 2012-09 | HORNOS AG; ACG; APG-201 | 2 | Fagor Industrial S.Coop. FAGOR Oñate |

| MOD. | HORNOS / OVEN | ZONA / ZONE | PUERTA (HASTA 06-2014) / DOOR (UNTIL 06-2014) | PLANO DIAGRAM | C-3073 |
|---|---|---|---|---|---|

| ITEM | CODIGO REFERENCE | DENOMINACION | DENOMINATION | ACG-201 | AG-201 | APG-201 | | | | | | ELIMINADO ELIMINATED | INTRODUCID. INTRODUCED | NOTAS |
|---|---|---|---|---|---|---|---|---|---|---|---|---|---|---|
| **1** | **12041083** | **KIT CRISTAL INTER. 201** | **201 INNER GLASS KIT** | **1** | **1** | **1** | | | | | | | | |
| 2 | 12039324 | TAPA CIERRE PUERTA 202 | DOOR CLOSING COVER 202 | 1 | 1 | 1 | | | | | | 12,03,14 | | |
| | 12010226 | TORNILLO ALOMADO.M5X10 | CURVED SCREW .M5X10 | 2 | 2 | 2 | | | | | | 12,03,14 | | |
| | 12010278 | TORNILLO ALOMADO M4X10 | CURVED SCREW M.4x10 | 2 | 2 | 2 | | | | | | 12,03,14 | | |
| 3 | 12024319 | PESTILLO | INNER GLASS HINGE | 2 | 2 | 2 | | | | | | | | |
| 4 | 12039302 | CONTRAPUERTA MANILLA 202 | COMPLETE HANDLE DOOR 202 | 1 | 1 | 1 | | | | | | 12,03,14 | | |
| 5 | 12039326 | SUPLEMENTO SUJ. CERRADURA | LOCK FIXING SUPPLEMENT | 1 | 1 | 1 | | | | | | 12,03,14 | | |
| 6 | 12024389 | GUIA MANILLA | HANDLE GUIDE | 1 | 1 | 1 | | | | | | 12,03,14 | | |
| | 12023608 | PITON ENGANCHE PUERTA | DOOR FASTENER SPIKE | 2 | 2 | 2 | | | | | | | | |
| 7 | 12024402 | BASE DE BISAGRA | HINGE BASE | 2 | 2 | 2 | | | | | | | | |
| | 12010209 | TORNILLO AVELLANADO M5X15 | COUNTERSUNK SCREW M.5x15 | 2 | 2 | 2 | | | | | | | | |
| 8 | 12039312 | BISAGRA SUPERIOR | UPPER HINGE | 1 | 1 | 1 | | | | | | | | |
| | 12009882 | ARANDELA ABANICO A6 A.304 | FAN SHAPED WASHER A.6 | 3 | 3 | 3 | | | | | | | | |
| | 12010106 | TORNILLO ALLEN INOX. M6X35MM | ALLEN BOLT STAINLE.M6X35MM | 3 | 3 | 3 | | | | | | | | |
| 9 | 12023636 | EJE SUPERIOR | UPPER SHAFT | 1 | 1 | 1 | | | | | | | | |
| | 12023631 | ARANDELA AMARRE | DOOR ANCHORING WASHER | 1 | 1 | 1 | | | | | | | | |
| | 12023716 | RESORTE 06329 | SPRING 06329 | 1 | 1 | 1 | | | | | | | | |
| | 12009882 | ARANDELA ABANICO A6 A.304 | FAN SHAPED WASHER A.6 | 1 | 1 | 1 | | | | | | | | |
| | 12010186 | TORNILLO EXAGONAL M6X15 A304 | HEXAGONAL SCREW M6X15 | 1 | 1 | 1 | | | | | | | | |
| 11 | 12024505 | SOPORTE RESORTE | SPRING HOLDER | 1 | 1 | 1 | | | | | | 12,03,14 | | |
| | 12024164 | RESORTE 34548 | SPRING | 2 | 2 | 2 | | | | | | | | |
| | 12010213 | TORNILLO ALOMADO M5x15 | CURVED SCREW M.5x15 | 2 | 2 | 2 | | | | | | | | |
| 12 | 12044776 | ASA COMPLETA 2/1 ADVANCE | HANDLE 2/1 ADVANCE | 1 | 1 | 1 | | | | | | 12,03,14 | | |
| | 12010236 | VARILLA ROSCADA M6X15 | THREADED ROD M.6x15 | 1 | 1 | 1 | | | | | | | | |
| 13 | 12039311 | BASE BISAGRA INFERIOR PUERTA | LOWER DOOR HINGE BASE | 1 | 1 | 1 | | | | | | 02.09.13 | | |
| 13 | 12047967 | BASE BISAGRA INFERIOR 6 DIEN | LOWER HINGE BASE | 1 | 1 | 1 | | | | | | | 02.09.13 | |
| | 12009944 | ARANDELA A5 | FLAT WASHER A.5 | 1 | 1 | 1 | | | | | | | | |
| 14 | 12022049 | SOPORTE IMAN | MAGNET HOLDER | 1 | 1 | 1 | | | | | | | | |
| | 12009970 | REMACHE EXAGONAL M.5 | HEXAGONAL RIVET M.5 | 1 | 1 | 1 | | | | | | | | |
| | 12010213 | TORNILLO ALOMADO M5X10 | CURVED SCREW M5X10 | 1 | 1 | 1 | | | | | | | | |
| | | | | | | | | | | | | | | |

| MOD. | HORNOS / OVEN | ZONA / ZONE | PUERTA (HASTA 06-2014) / DOOR (UNTIL 06-2014) | PLANO DIAGRAM | C-3073 |
|---|---|---|---|---|---|

| ITEM | CODIGO REFERENCE | DENOMINACION | DENOMINATION | ACG-201 | AG-201 | APG-201 | | | | | | ELIMINADO ELIMINATED | INTRODUCID. INTRODUCED | NOTAS |
|---|---|---|---|---|---|---|---|---|---|---|---|---|---|---|
| 15 | 12024384 | IMAN | MAGNET | 1 | 1 | 1 | | | | | | | | |
| | 12009890 | ARANDELA ABANICO A5 A.304 | FAN SHAPED WASHER A.5 | 1 | 1 | 1 | | | | | | | | |
| | 12010242 | TORNIL. APLASTADO M5X13 A 304 | FLAT SCREW M.5x13 | 1 | 1 | 1 | | | | | | | | |
| 16 | 12024560 | INTERRUPTOR MAGNETICO AC | MAGNETIC SWITCH AC | 1 | 1 | 1 | | | | | | | | |
| 17 | 12022166 | SOPORTE MICRO PUERTA | DOOR MICRO SWITCH | 1 | 1 | 1 | | | | | | | | |
| | 12010242 | TORNIL. APLASTADO M5X13 A 304 | FLAT SCREW M.5x13 | 1 | 1 | 1 | | | | | | | | |
| 18 | 12024799 | EJE DE MANILLA PUERTA | LEVER SHAFT | 1 | 1 | 1 | | | | | | 12,03,14 | | |
| | 12024245 | CASQUILLO | BUSHING | 1 | 1 | 1 | | | | | | | | |
| 19 | 12024673 | MECANISMO CIERRE | CLOSING MECHANISM | 1 | 1 | 1 | | | | | | 12,03,14 | | |
| S/Nº | 12010292 | PASADOR DE ALETAS 2X20 | COTTER PIN 2x15 | 4 | 4 | 4 | | | | | | | | |
| | 12009882 | ARANDELA ABANICO A6 A.304 | FAN SHAPED WASHER A.6 | 2 | 2 | 2 | | | | | | | | |
| | 12010255 | TORNILLO EXAGONAL M6 INOX. | HEXAGONAL SCREW M6 INOX. | 2 | 2 | 2 | | | | | | | | |
| | 12023506 | CASQUILLO AMARRE TECLADO | COLLAR | 2 | 2 | 2 | | | | | | | | |
| 20 | 12039308 | TUBO ALARGADERA 201/202 ADV | ROD 201/202 ADV | 2 | 2 | 2 | | | | | | 12,03,14 | | |
| 21 | 12024657 | ELEMENTO CIERRE | CLOSING COMPONENT | 2 | 2 | 2 | | | | | | 12,03,14 | | |
| | 12009890 | ARANDELA ABANICO A5 A.304 | FAN SHAPED WASHER A.5 | 8 | 8 | 8 | | | | | | | | |
| | 12010284 | TORNILLO EXAGONAL M5 INOX. | HEXAGONAL SCREW M5 INOX. | 8 | 8 | 8 | | | | | | | | |
| 22 | 12024495 | ENGANCHE PUERTA | FASTENER | 2 | 2 | 2 | | | | | | 12,03,14 | | |
| 23 | 12024380 | SUPLEMENTO ENGANCHE | FASTENER SUPPLEMENT | 2 | 2 | 2 | | | | | | 12,03,14 | | |
| 24 | 12022138 | CALZO DE ENGANCHE | COUPLING CHOCK | 4 | 4 | 4 | | | | | | 12,03,14 | | |
| 25 | 12041134 | JUNTA PUERTA COMPL.201 ADV | DOOR JOINT 201 ADV | 1 | 1 | 1 | | | | | | | | |
| 26 | 12041088 | JUNTA CIERRE INFERIOR 201 | LOWER LOCK JOINT 201 | 1 | 1 | 1 | | | | | | | | |
| **27** | **12046022** | **KIT PUERTA 201** | **DOOR 201 KIT** | **1** | **1** | **1** | | | | | | 12,03,14 | | |
| | | | | | | | | | | | | | | |
| | | | | | | | | | | | | | | |
| | | | | | | | | | | | | | | |
| | | | | | | | | | | | | | | |
| | | | | | | | | | | | | | | |
| | | | | | | | | | | | | | | |
| | | | | | | | | | | | | | | |
| | | | | | | | | | | | | | | |

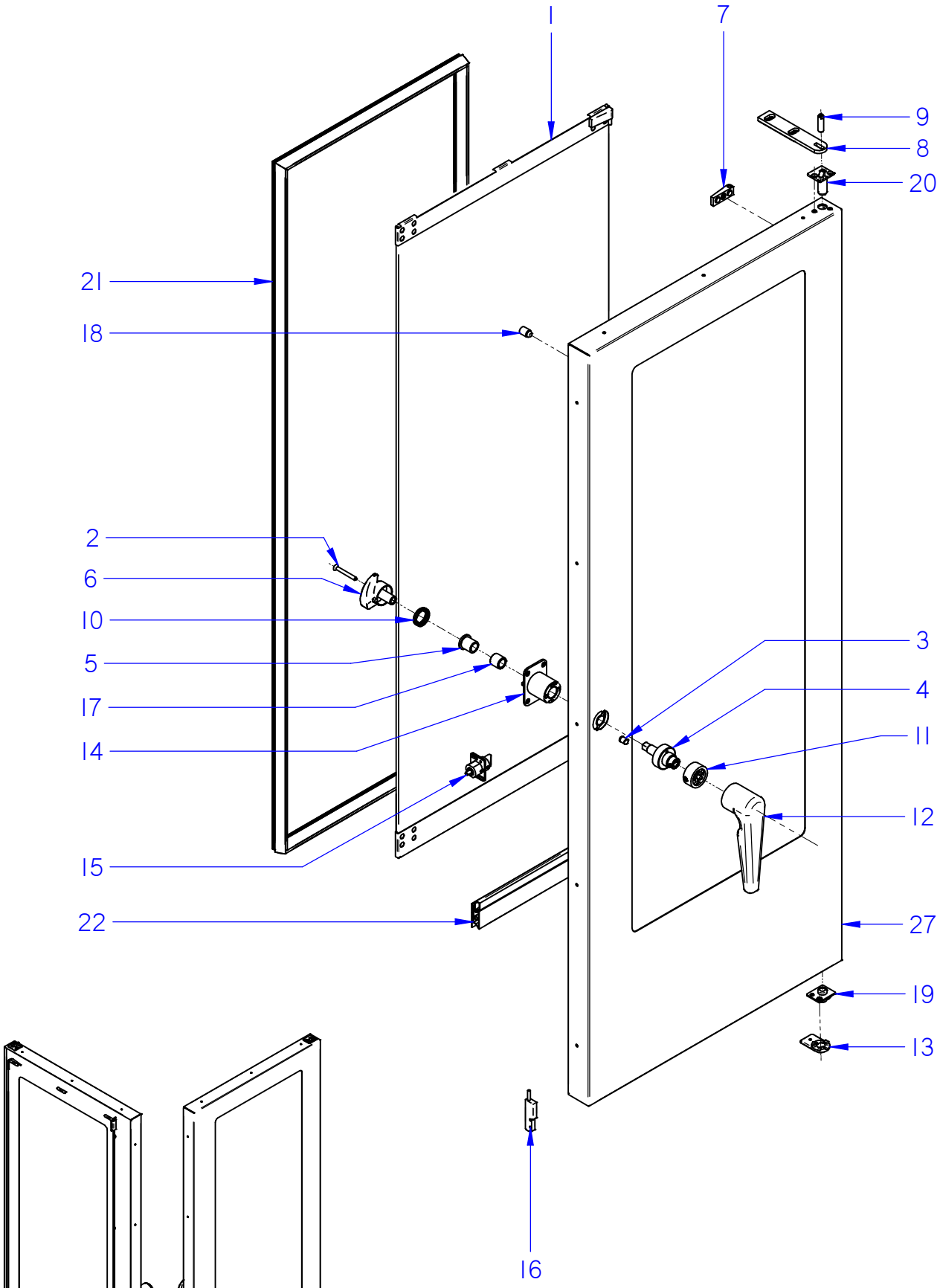


ITEM MARCADO EN COLOR = REPUESTO RECOMENDADO
COLOURED ITEM = RECOMMENDED SPARE PART

| Nº plano / Drawing N. | Firma / Signature | Fecha / Date | Denominación / Denomination: PUERTA / DOOR | Lamina / Sheet | |
|---|---|---|---|---|---|
| C-3073-14 | Iban R. | 2014-06 | HORNOS AG; ACG; APG-201 | 2-14 | Fagor Industrial S.Coop. Oñate FAGOR |

| MOD. | HORNOS / OVEN | ZONA / ZONE | PUERTA (DESDE 06-2014) / DOOR (FROM 06-2014) | PLANO DIAGRAM | C-3073-14 |
|---|---|---|---|---|---|

| ITEM | CODIGO REFERENCE | DENOMINACION | DENOMINATION | ACG-201 | AG-201 | APG-201 | | | | | | ELIMINADO ELIMINATED | INTRODUCID. INTRODUCED | NOTAS / NOTES |
|---|---|---|---|---|---|---|---|---|---|---|---|---|---|---|
| 1 | **12041083** | **KIT CRISTAL INTER. 201** | **201 INNER GLASS KIT** | **1** | **1** | **1** | | | | | | | | |
| 2 | 12097552 | TORNILLO AVELLANADO M6x50 | COUNTERSAUNK SCREW M6x50 | 1 | 1 | 1 | | | | | | | 12,03,14 | |
| 3 | 12049719 | POSICIONADOR DE BOLA MUELLE | BALL-SPRING FIXER | 1 | 1 | 1 | | | | | | | 12,03,14 | |
| 4 | 12049683 | INSERTO ASA 20X CIERRE UNICO | HANDLE INSERT 20X SING. LOCK | 1 | 1 | 1 | | | | | | | 12,03,14 | |
| 5 | 12025100 | CASQUILLO SELFOIL 16-22-25 | SELFOIL BUSHING 16-22-25 | 1 | 1 | 1 | | | | | | | 12,03,14 | |
| 6 | 12049692 | LEVA CIERRE UNICO 20X ADV | SINGLE LOCK CAM 20X ADV | 1 | 1 | 1 | | | | | | | 12,03,14 | |
| 7 | 12024402 | BASE DE BISAGRA | HINGE BASE | 2 | 2 | 2 | | | | | | | | |
| 8 | 12039312 | BISAGRA SUPERIOR | UPPER HINGE | 1 | 1 | 1 | | | | | | | | |
| 9 | 12023636 | EJE SUPERIOR | UPPER SHAFT | 1 | 1 | 1 | | | | | | | | |
| 10 | 12093685 | MUELLE LEVA PUERTA ADVANCE | CAM SPRING ADVANCE DOOR | 1 | 1 | 1 | | | | | | | 12,03,14 | |
| 11 | 12102288 | INSERTO AMARRE ADV 202 | FASTENING INSERT ADV 202 | 1 | 1 | 1 | | | | | | | 12,03,14 | |
| 12 | 12044773 | ASA ADVANCE | ADVANCE HANDLE | 1 | 1 | 1 | | | | | | | 12,03,14 | |
| 13 | 12047967 | BASE BISAGRA INFERIOR 6 DIEN | LOWER HINGE BASE | 1 | 1 | 1 | | | | | | | | |
| 14 | 12049691 | SOPORTE MANILLA 20X | 20X HANDLE SUPPORT | 1 | 1 | 1 | | | | | | | 12,03,14 | |
| 15 | 12113376 | MOD PITON PUERTA | DOOR BOLT MODULE | 1 | 1 | 1 | | | | | | | 12,03,14 | |
| 16 | 12024560 | INTERRUPTOR MAGNETICO AC | MAGNETIC SWITCH AC | 1 | 1 | 1 | | | | | | | | |
| 17 | 12097533 | CASQUILLO SELFOIL TIPOA 16-22-20 | SELFOIL BUSHING 16-22-20 | 1 | 1 | 1 | | | | | | | 12,03,14 | |
| 18 | 12024794 | TOPE CRISTAL INTERIOR | INNER GLASS BLOCK | 9 | 9 | 9 | | | | | | | | |
| 19 | 12049660 | BISAGRA INF. 202 ADV 6 DIENTES | LOWER HINGE 202 ADV. 6 TEETH | 1 | 1 | 1 | | | | | | | | |
| 20 | 12049282 | BISAGRA SUP. 202 TOPE ALTO | TOP HINGE 202 | 1 | 1 | 1 | | | | | | | | |
| 21 | 12041134 | JUNTA PUERTA COMPL.201 ADV | DOOR JOINT 201 ADV | 1 | 1 | 1 | | | | | | | | |
| 22 | 12041088 | JUNTA CIERRE INFERIOR 201 | LOWER LOCK JOINT 201 | 1 | 1 | 1 | | | | | | | | |
| 23 | **12097686** | **KIT PUERTA 201 CIERRE UNICO** | **SINGLE LOCK DOOR 201 KIT** | **1** | **1** | **1** | | | | | | | | |
| | | | | | | | | | | | | | | |
| | | | | | | | | | | | | | | |
| | | | | | | | | | | | | | | |
| | | | | | | | | | | | | | | |
| | | | | | | | | | | | | | | |
| | | | | | | | | | | | | | | |
| | | | | | | | | | | | | | | |
| | | | | | | | | | | | | | | |

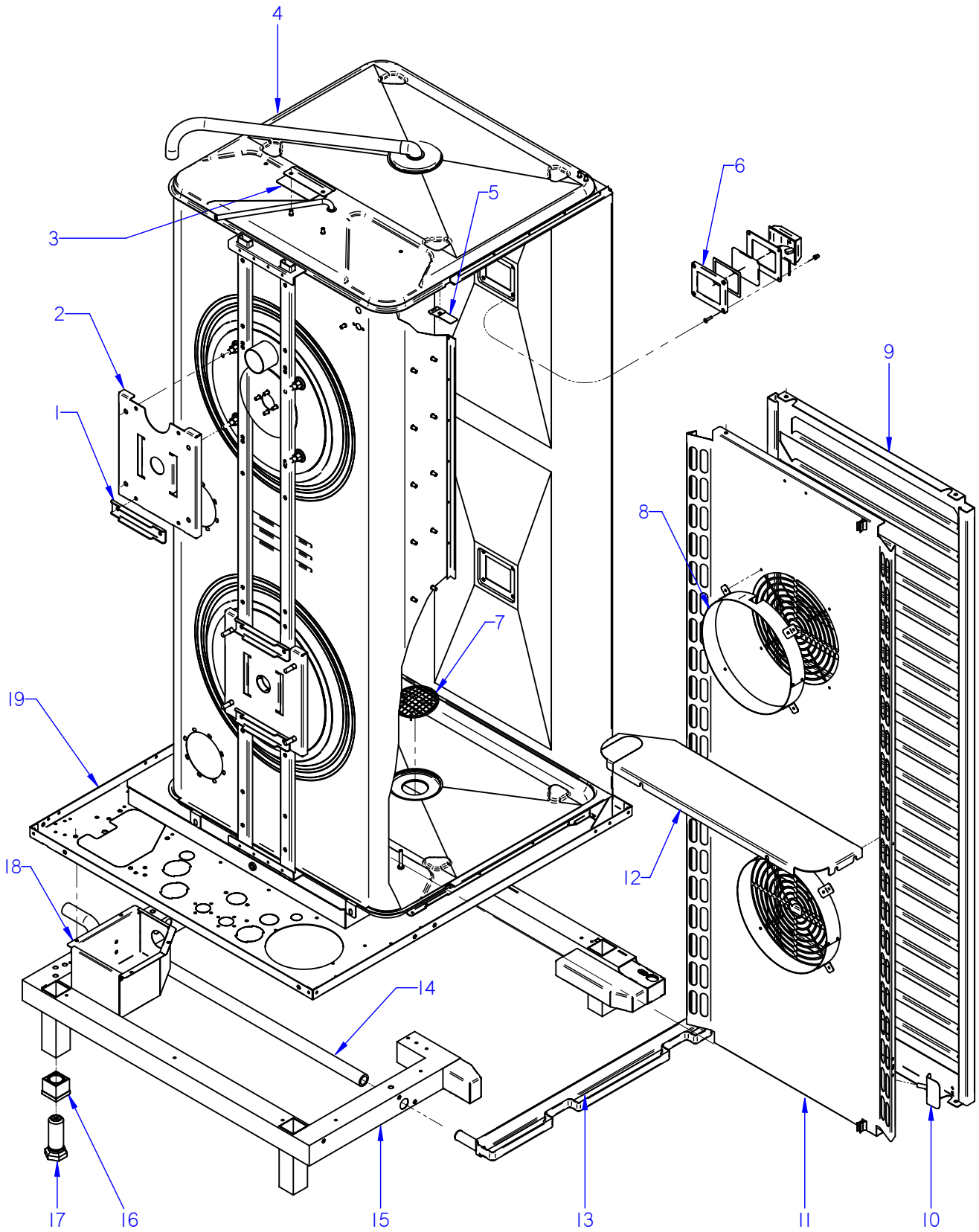


ITEM MARCADO EN COLOR = REPUESTO RECOMENDADO
COLOURED ITEM = RECOMMENDED SPARE PART

| Nº plano / N º plane | Firma | Fecha / Date | Denominación / Denomination: MUEBLE INTERIOR / INTERIOR OVEN | Lamina / Sheet | |
|---|---|---|---|---|---|
| C-3074 | | 2012-09 | HORNOS AG; ACG; APG-201 | 3 | Fagor Industrial S.Coop. FAGOR Oñate |

| MOD. | HORNOS / OVEN | ZONA / ZONE | MUEBLE INTERIOR / INTERIOR OVEN | PLANO DIAGRAM | C-3074 |
|---|---|---|---|---|---|

| ITEM | CODIGO REFERENCE | DENOMINACION | DENOMINATION | ACG-201 | AG-201 | APG-201 | | | | | | ELIMINADO ELIMINATED | INTRODUCID. INTRODUCED | NOTAS |
|---|---|---|---|---|---|---|---|---|---|---|---|---|---|---|
| 1 | 12039460 | REFUERZO MOTOR | MOTOR REINFORCEMENT | 3 | 3 | 3 | | | | | | | | |
| | 12009944 | ARANDELA A5 | FLAT WASHER A.5 | 8 | 8 | 8 | | | | | | | | |
| | 12009890 | ARANDELA ABANICO A5 A.304 | FAN SHAPED WASHER A.5 | 8 | 8 | 8 | | | | | | | | |
| | 12010221 | TORNILLO EXAGONAL M5X15 | HEXAGONAL BOLT M5X15 | 8 | 8 | 8 | | | | | | | | |
| 2 | 12039615 | SOPORTE MOTOR | SOPORTE MOTOR | 2 | 2 | 2 | | | | | | | | |
| S/Nº | 12039333 | PERFIL SOPORTE MOTOR 202 | RAIL MOTOR 202 | 2 | 2 | 2 | | | | | | | | |
| | 12010163 | REMACHE EXAGONAL M.5 | HEXAGONAL RIVET M.5 | 16 | 16 | 16 | | | | | | | | |
| | 12010238 | TORNILLO EXAGONAL M5x10 | HEXAGONAL BOLT M5x10 | 8 | 8 | 8 | | | | | | | | |
| 3 | 12039529 | SOPORTE LIMITADOR CAMARA | LIMITER BRACKET CAMERA | 1 | 1 | 1 | | | | | | | | |
| | 12009868 | ARANDELA PLANA INOX 6MM | WASHER FLAT 6 MM INOX. | 2 | 2 | 2 | | | | | | | | |
| | 12009882 | ARANDELA ABANICO A6 A.304 | FAN SHAPED WASHER A.6 | 2 | 2 | 2 | | | | | | | | |
| | 12010255 | TORNILLO EXAGONAL M6 INOX. | HEXAGONAL SCREW M6 INOX. | 2 | 2 | 2 | | | | | | | | |
| 4 | 12046450 | CUERPO INT. COMPL. ACG201 | INTERIOR FULL BODY ACG201 | 1 | _ | _ | | | | | | 01,10,12 | | |
| 4 | 12044444 | CUERPO INT. COMPL. ACG201 | INTERIOR FULL BODY ACG201 | 1 | _ | _ | | | | | | | 01,10,12 | |
| 4 | 12046593 | CUERPO INT. COMPL. AG 201 | INTERIOR FULL BODY AG 201 | _ | 1 | _ | | | | | | 01,10,12 | | |
| 4 | 12044435 | CUERPO INT. COMPL. AG 201 | INTERIOR FULL BODY AG 201 | _ | 1 | _ | | | | | | | 01,10,12 | |
| 4 | 12046597 | CUERPO INT. COMPL. 201 APG | INTERIOR FULL BODY 201 APG | _ | _ | 1 | | | | | | 01,10,12 | | |
| 4 | 12044396 | CUERPO INT. COMPL. 201 APG | INTERIOR FULL BODY 201 APG | _ | _ | 1 | | | | | | | 01,10,12 | |
| | 12010002 | REMACHE EXAGONAL M.4 INOX | HEXAGONAL RIVET M.4 INOX | 8 | 8 | 8 | | | | | | | | |
| | 12010267 | ARANDELA 16X6X1.2 A.304 | FLAT WASHER 16X6X1.2 A.304 | 4 | 4 | 4 | | | | | | | | |
| | 12009882 | ARANDELA ABANICO A6 A.304 | FAN SHAPED WASHER A.6 | 4 | 4 | 4 | | | | | | | | |
| | 12010186 | TORNILLO EXAGONAL M6X15 A304 | HEXAGONAL SCREW M6X15 | 4 | 4 | 4 | | | | | | | | |
| S/Nº | 12023935 | PUNTA DIFUSORA LAVADO | WASHING DISPENSER POINT | _ | _ | 1 | | | | | | | | |
| 5 | 12041767 | SOPORTE SONDA PINCHO CAMAR | CAMERA PROBE SUPP. PINCHO | 1 | 1 | 1 | | | | | | 14,02,13 | | |
| | 12009890 | ARANDELA ABANICO A5 A.304 | FAN SHAPED WASHER A.5 | 1 | 1 | 1 | | | | | | 14,02,13 | | |
| | 12010284 | TORNILLO EXAGONAL M5 INOX. | HEXAGONAL SCREW M5 INOX. | 1 | 1 | 1 | | | | | | 14,02,13 | | |
| | 12010090 | REMACHE AVINOX Ø4X7,5MM | AVINOX RIVET Ø4X7,5MM | 1 | 1 | 1 | | | | | | 14,02,13 | | |
| 6 | 12024464 | MARCO LAMPARA | LAMP ANCHORING PLATEN | 2 | 2 | 2 | | | | | | | | |
| S/Nº | 12023532 | JUNTA INTERIOR LAMPARA | LAMP INNER JOINT | 2 | 2 | 2 | | | | | | | | |
| S/Nº | 12023668 | CRISTAL LAMPARA | LAMP GLASS | 2 | 2 | 2 | | | | | | | | |
| S/Nº | 12023578 | JUNTA EXTERIOR LAMPARA | LAMP OUTER JOINT | 2 | 2 | 2 | | | | | | | | |

| MOD. | HORNOS / OVEN | ZONA / ZONE | MUEBLE INTERIOR / INTERIOR OVEN | PLANO DIAGRAM | C-3074 |
|---|---|---|---|---|---|

| ITEM | CODIGO REFERENCE | DENOMINACION | DENOMINATION | ACG-201 | AG-201 | APG-201 | | | | | | ELIMINADO ELIMINATED | INTRODUCID. INTRODUCED | NOTAS |
|---|---|---|---|---|---|---|---|---|---|---|---|---|---|---|
| S/Nº | 12024545 | PORTALAMPARAS | LAMP HOLDER | 2 | 2 | 2 | | | | | | | | |
| S/Nº | 12025123 | LAMPARA 10W-12V | LIGHT 10W 12V | 2 | 2 | 2 | | | | | | | | |
| | 12010262 | TORNILLO AVELLANADO M4X15 | COUNTERSUNK SCREW M.4x15 | 8 | 8 | 8 | | | | | | | | |
| 7 | 12020331 | FILTRO DESAGÜE 201 | DRAINAGE FILTER 201 | 1 | 1 | 1 | | | | | | 15.09.13 | | |
| 7 | 12095042 | FILTRO DESAGÜE Ø53 | DRAINAGE FILTER Ø53 | 1 | 1 | 1 | | | | | | | 15.09.13 | |
| 8 | 12039604 | 061 SUPL. CUBREVENTILADOR | 061 SUPPL. FAN COVER | 2 | 2 | 2 | | | | | | | | |
| S/Nº | 12021993 | FIJACIÓN SUPLEMENTO | FAN COVER SUPPLEMENT BINDI | 8 | 8 | 8 | | | | | | | | |
| 9 | 12044008 | PORTABANDEJAS 201 ACE | ACE 201 HOLDER | 2 | _ | _ | | | | | | 01.03.13 | | |
| 9 | 12044008 | PORTABANDEJAS 201 ACE | ACE 201 HOLDER | 1 | _ | _ | | | | | | | 01.03.13 | |
| 9 | 12049000 | GUIA BANDEJA 201 SOLDADA | WELDED TRAY GUIDE 201 | 1 | _ | _ | | | | | | | 01.03.13 | |
| S/Nº | 12039606 | RESORTE PORTABANDEJAS | SPRING HOLDER | 4 | _ | _ | | | | | | 01.03.13 | | |
| S/Nº | 12039606 | RESORTE PORTABANDEJAS | SPRING HOLDER | 5 | _ | _ | | | | | | | 01.03.13 | |
| S/Nº | 12048408 | SOPORTE CORE HOLDER | CORE HOLDER SUPPORT | 1 | _ | _ | | | | | | | 01.03.13 | |
| 10 | 12045293 | SOPORTE PINCHO 202 | SUPP. PINCHO 202 | 1 | 1 | 1 | | | | | | | | |
| 11 | 12041090 | CUBREVENTILADOR 201 ADV | FAN COVER 201 ADV | 1 | 1 | 1 | | | | | | | | |
| S/Nº | 12039606 | RESORTE PORTABANDEJAS | SPRING HOLDER | 2 | 2 | 2 | | | | | | 01.03.13 | | |
| S/Nº | 12021991 | ENGANCHE PORTABANDEJAS | HOOK HOLDER TRAYS | 2 | 2 | 2 | | | | | | | 01.03.13 | |
| 12 | 12041119 | CHAPA REFUERZO CUBA AE 201 | CUBA REINFOR. PLATE AE 201 | 1 | 1 | 1 | | | | | | | | |
| | 12009868 | ARANDELA PLANA INOX 6MM | WASHER FLAT 6 MM INOX. | 7 | 7 | 7 | | | | | | | | |
| | 12010255 | TORNILLO EXAGONAL M6 INOX. | HEXAGONAL SCREW M6 INOX. | 7 | 7 | 7 | | | | | | | | |
| 13 | 12039467 | RECOGEAGUAS HORNO 201 | SPRING WATER COLLE. 201 | 1 | _ | _ | | | | | | | | |
| 14 | 12039498 | TUBO RECOGEAGUAS 101 | COLLECT WATER PIPE 101 | 1 | _ | _ | | | | | | | | |
| | 12009628 | ABRAZADERA ELAST. 26.7-28.1 | SPRING CLAMP 26.7-28.1 | 2 | _ | _ | | | | | | | | |
| 15 | 12043987 | REFUERZO BASE COM. 201 ACE | FULL BASE REINFORC. 201 ACE | 1 | _ | _ | | | | | | | | |
| 15 | 12041105 | REFUERZO BASE COM. 201 ADV | FULL BASE REINFORC. 201 ADV | _ | 1 | 1 | | | | | | | | |
| | 12010163 | REMACHE EXAGONAL M.5 | HEXAGONAL RIVET M.5 | 16 | 16 | 16 | | | | | | | | |
| | 12010090 | REMACHE AVINOX Ø4X7,5 MM | AVINOX Ø4X7,5 MM RIVET | 16 | 16 | 16 | | | | | | | | |
| 16 | 12043392 | TUERCA PATA 202 ADVANCE | NUT LEG 202 ADVANCE | 4 | 4 | 4 | | | | | | | | |
| 17 | 12043393 | TORNILLO PATA 202 ADVANCE | SCREW LEG 202 ADVANCE | 4 | 4 | 4 | | | | | | | | |
| 18 | 12043894 | CAJA CUBRE BOMBA ADV 202 | PUMP CASE COVER ADV202 | _ | _ | 1 | | | | | | | | |
| 19 | 12041104 | BASE EXTERIOR 1201 ADV | EXTERI. BASE 201 ADV | 1 | 1 | 1 | | | | | | | | |

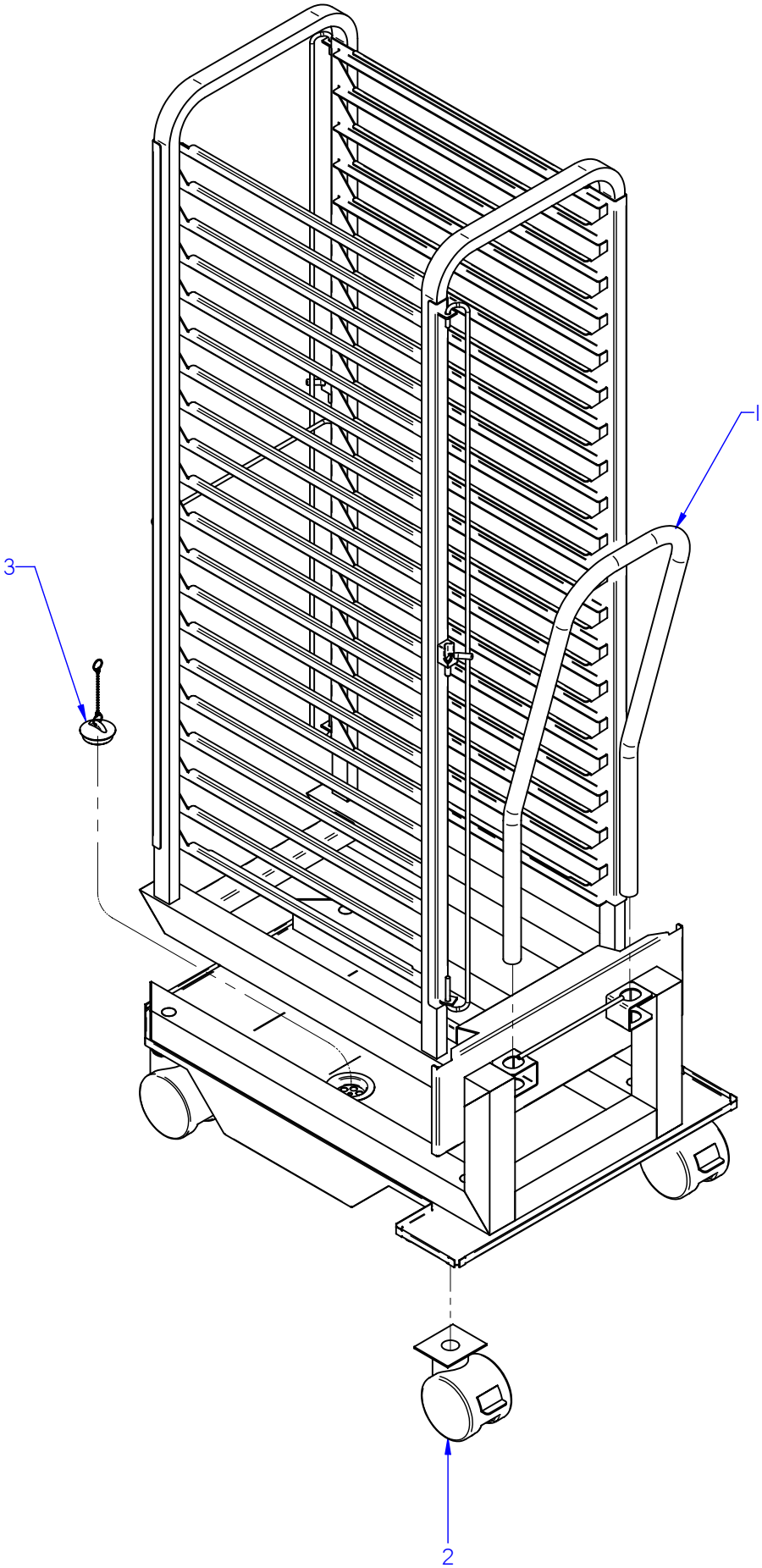


ITEM MARCADO EN COLOR = REPUESTO RECOMENDADO
COLOURED ITEM = RECOMMENDED SPARE PART

| Nº plano / N º plane | Firma | Fecha / Date | Denominación / Denomination: CARRO / TROLLEY | Lamina / Sheet | |
|---|---|---|---|---|---|
| C-3075 | | 2012-09 | HORNOS AG; APG-201 | 4 | Fagor Industrial S.Coop. Oñate FAGOR |

| MOD. | HORNOS / OVEN | ZONA / ZONE | CARRO / TROLLEY | PLANO DIAGRAM | C-3075 |
|---|---|---|---|---|---|

| ITEM | CODIGO REFERENCE | DENOMINACION | DENOMINATION | AG-201 | APG-201 | | | | | | | ELIMINADO ELIMINATED | INTRODUCID. INTRODUCED | NOTAS |
|---|---|---|---|---|---|---|---|---|---|---|---|---|---|---|
| | **12041135** | **CARRO 201 ADVANCE** | **TROLLEY 201 ADVANCE** | **1** | **1** | | | | | | | | | |
| 1 | 12041148 | ASA COMPLETA CARRO 201 ADV | HANDLE FULL 201 ADV | 1 | 1 | | | | | | | | | |
| 2 | 12045315 | RUEDA DOBLE SIN FRENO | NO DOUBLE WHEEL BRAKE | 2 | 2 | | | | | | | | | |
| S/Nº | 12045312 | KIT RUEDA DOBLE CON FRENO | DOUB. WHEEL WITH BRAKE KIT | 1 | 1 | | | | | | | | | |
| 3 | 12024275 | TAPON Ø44 | CAP Ø44 | 1 | 1 | | | | | | | | | |
| S/Nº | 12048408 | SOPORTE CORE HOLDER | CORE HOLDER SUPPORT | 1 | 1 | | | | | | | | 01.03.13 | |

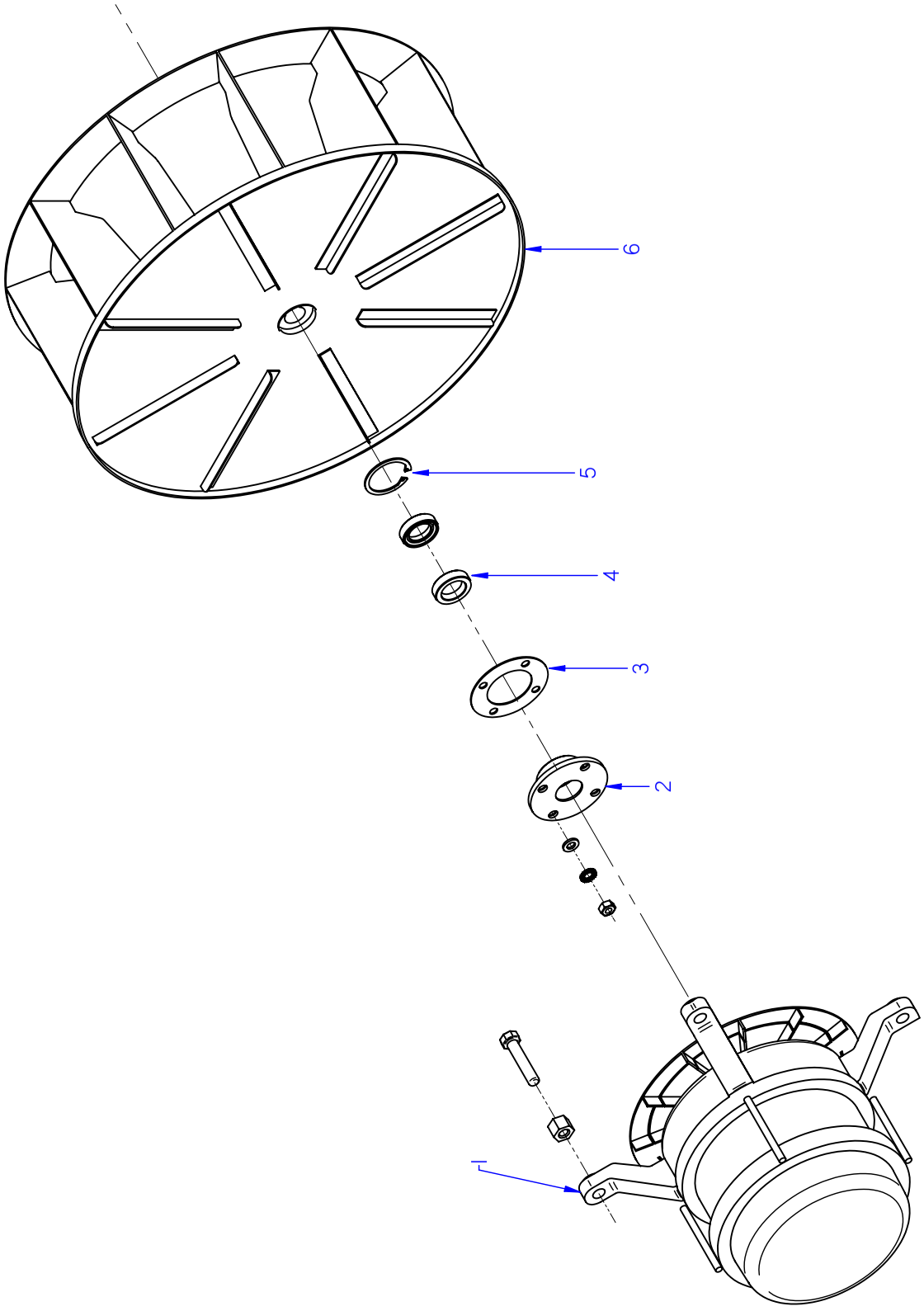


ITEM MARCADO EN COLOR = REPUESTO RECOMENDADO
COLOURED ITEM = RECOMMENDED SPARE PART

| Nº plano / N.º plane | Firma | Fecha / Date | Denominación / Denomination: TURBINA / TURBINE | Lamina / Sheet | |
|---|---|---|---|---|---|
| C-3076 | | 2012-09 | HORNOS AG; ACG; APG-201 | 5 | Fagor Industrial S.Coop. FAGOR Oñate |

| MOD. | HORNOS / OVEN | ZONA / ZONE | TURBINA / TURBINE | PLANO DIAGRAM | C-3076 |
|---|---|---|---|---|---|

| ITEM | CODIGO REFERENCE | DENOMINACION | DENOMINATION | ACG-201 | AG-201 | APG-201 | | | | | | ELIMINADO ELIMINATED | INTRODUCID. INTRODUCED | NOTAS |
|---|---|---|---|---|---|---|---|---|---|---|---|---|---|---|
| 1 | 12024325 | MOTOR 230V AC 3N650KW 1450RP | MOTOR 230V AC 3N650KW 1450 | 2 | 2 | 2 | | | | | | | | |
| S/Nº | 12023560 | DISTANCIADOR MOTOR 10/21 | SPACER MOTOR 10/21 | 8 | 8 | 8 | | | | | | | | |
| | 12010110 | ARANDELA PLANA Fe Zn 8,40MM | WASHER FLAT Fe Zn 8,40MM | 8 | 8 | 8 | | | | | | | | |
| | 12009840 | ARANDELA ABANICO INOX 8MM | FAN SHAPED WASHER NOX 8MM | 8 | 8 | 8 | | | | | | | | |
| | 12010210 | TORNILLO EXAGONAL INOX 8MM | HEXAGONAL SCREW INOX 8MM | 8 | 8 | 8 | | | | | | | | |
| 2 | 12024742 | CASQUILLO RETEN 10/21 | SEAL BUSHING 10/21 | 2 | 2 | 2 | | | | | | | | |
| 3 | 12024221 | JUNTA CASQUILLO RETEN | SEAL BUSHING GASKET | 2 | 2 | 2 | | | | | | | | |
| | 12009868 | ARANDELA PLANA INOX 6MM | WASHER FLAT 6 MM INOX. | 8 | 8 | 8 | | | | | | | | |
| | 12009882 | ARANDELA ABANICO A6 A.304 | FAN SHAPED WASHER A.6 | 8 | 8 | 8 | | | | | | | | |
| | 12010255 | TORNILLO EXAGONAL M6 INOX. | HEXAGONAL SCREW M6 INOX. | 8 | 8 | 8 | | | | | | | | |
| | 12010056 | TORNILLO EXAGONAL M8X40 INOX | HEXAGONAL SCREW M8X40 INO | 8 | 8 | 8 | | | | | | | | |
| 4 | 12024510 | RETEN 17X28X7V | RETAINER 28x17x7 | 4 | 4 | 4 | | | | | | | | |
| 5 | 12010122 | ANILLO DE SEGURIDAD Ø 28X1.2 | SAFETY RING 28x1,2 | 2 | 2 | 2 | | | | | | | | |
| 6 | 12024306 | TURBINA RECTA Ø350X127 HANN. | TURBINE RECTA Ø350X127 HAN | 2 | 2 | 2 | | | | | | | | |
| | 12024190 | ARANDELA SEGURIDAD HANNING | HANNING SAFETY WASHER | 2 | 2 | 2 | | | | | | | | |
| | 12010030 | TORNILLO EXAGONAL M10X20 | HEXAGONAL SCREW M10X20 | 2 | 2 | 2 | | | | | | | | |

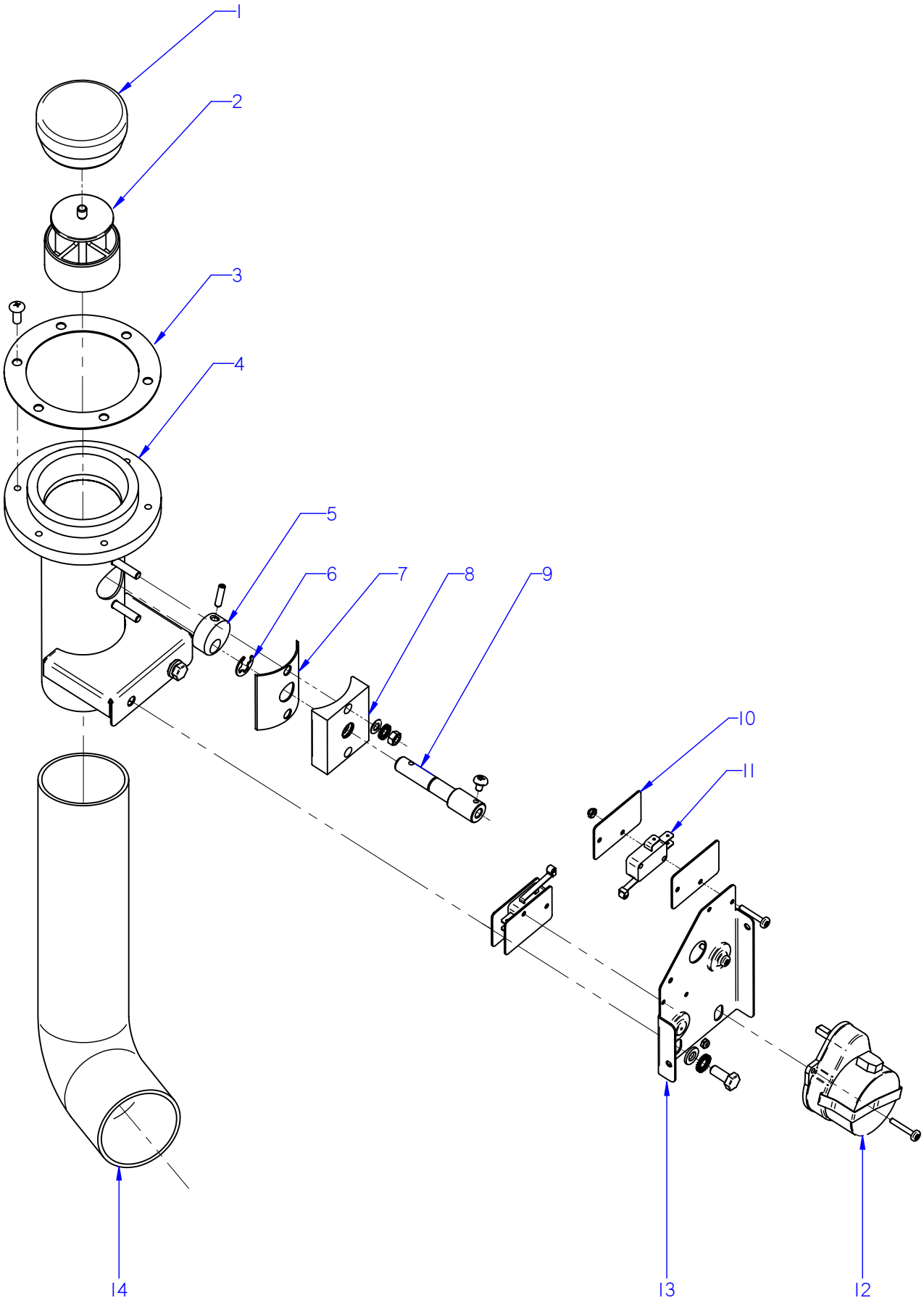


ITEM MARCADO EN COLOR = REPUESTO RECOMENDADO
COLOURED ITEM = RECOMMENDED SPARE PART

| Nº plano / N º plane | Firma | Fecha / Date | Denominación / Denomination: CHIMENEA / FLUEPIPE | Lamina / Sheet | |
|---|---|---|---|---|---|
| C-3077 | | 2012-09 | HORNOS AG; ACG; APG-201 | 6 | Fagor Industrial S.Coop. FAGOR Oñate |

| MOD. | HORNOS / OVEN | ZONA / ZONE | CHIMENEA / FLUEPIPE | PLANO DIAGRAM | C-3077 |
|---|---|---|---|---|---|

| ITEM | CODIGO REFERENCE | DENOMINACION | DENOMINATION | ACG-201 | AG-201 | APG-201 | | | | | | ELIMINADO ELIMINATED | INTRODUCID. INTRODUCED | NOTAS |
|---|---|---|---|---|---|---|---|---|---|---|---|---|---|---|
| 1 | 12024520 | RETENCION DE VAPORES | CLOSE CHIMNEY | 1 | 1 | 1 | | | | | | | | |
| 2 | 12024500 | GUIA RETENCION VAPORES | STEAM RETAINER GUIDE | 1 | 1 | 1 | | | | | | | | |
| 3 | 12023576 | JUNTA BASE CHIMENEA | FLUEPIPE BASE SEAL | 1 | 1 | 1 | | | | | | | | |
| S/Nº | 12095516 | JUNTA TORICA 5x1 | O-RING 5x1 | 6 | 6 | 6 | | | | | | | 17.10.13 | |
| | 12010242 | TORNIL. APLASTADO M5X13 A 304 | FLAT SCREW M.5x13 | 6 | 6 | 6 | | | | | | | | |
| 4 | 12022868 | CONJUNTO CHIMENEA | COMPLETE CHIMNEY | 1 | 1 | 1 | | | | | | | | |
| | 12010126 | REMACHE EXAGONAL M.6 | HEXAGONAL RIVET M.6 | 2 | 2 | 2 | | | | | | | | |
| 5 | 12024328 | LEVA EJE CHIMENEA | FLUEPIPE SHAFT CAM | 1 | 1 | 1 | | | | | | | | |
| | 12010258 | VARILLA ROSCADA M4X16 | THREADED ROD M4X16 | 1 | 1 | 1 | | | | | | | | |
| 6 | 12010014 | ARANDELA DE SEGURIDAD Ø8 | SAFETY WASHER Ø8 | 1 | 1 | 1 | | | | | | | | |
| 7 | 12023497 | JUNTA EJE CHIMENEA | FLUEPIPE SHAFT SEAL | 1 | 1 | 1 | | | | | | | | |
| 8 | 12024436 | GUIA EJE CHIMENEA | FLUEPIPE SHAFT GUIDE | 1 | 1 | 1 | | | | | | | | |
| S/Nº | 12010274 | JUNTA TORICA 9.19x2.62 | O-RING 9.19x2.62 | 1 | 1 | 1 | | | | | | | 01.03.13 | |
| | 12009944 | ARANDELA A5 | FLAT WASHER A.5 | 2 | 2 | 2 | | | | | | | | |
| | 12009890 | ARANDELA ABANICO A5 A.304 | FAN SHAPED WASHER A.5 | 2 | 2 | 2 | | | | | | | | |
| | 12010284 | TUERCA EXAGONAL M5 | HEXAGONAL NUT M.5 | 2 | 2 | 2 | | | | | | | | |
| 9 | 12024435 | EJE CHIMENEA ELECTRICA | ELECTRIC FLUEPIPE SHAFT | 1 | 1 | 1 | | | | | | | | |
| | 12009876 | TORNILLO ALOMADO M4X6 ZINC. | CURVED SCREW M4X6 ZINC. | 1 | 1 | 1 | | | | | | | | |
| 10 | 12009985 | PLACA SEPARADORA | SPACER PLATE | 4 | 4 | 4 | | | | | | | | |
| | 12010247 | TORNILLO ALOMADO M3X20 | CURVED SCREW M3X20 | 4 | 4 | 4 | | | | | | | | |
| | 12010289 | TUERCA AUTOBLOCANTE M3 | SELF-LOCKING NUT M3 | 4 | 4 | 4 | | | | | | | | |
| 11 | 12025193 | INTERRUPTOR PUERTA | DOOR SWITCH | 2 | 2 | 2 | | | | | | | | |
| 12 | 12024638 | MOTOR CHIMENEA | FLUEPIPE MOTOR | 1 | 1 | 1 | | | | | | | | |
| 13 | 12022146 | ESCUA. AMARRE MOTOR CHIMEN. | FLUEPIPE MOTOR FASTENING BI | 1 | 1 | 1 | | | | | | | | |
| | 12009868 | ARANDELA A6 | WASHER A6 | 2 | 2 | 2 | | | | | | | | |
| | 12009882 | ARANDELA ABANICO A6 A.304 | FAN SHAPED WASHER A.6 | 2 | 2 | 2 | | | | | | | | |
| | 12010186 | TORNILLO EXAGONAL M6X15 A304 | HEXAGONAL SCREW M6X15 | 2 | 2 | 2 | | | | | | | | |
| 14 | 12024122 | TUBO FLEXIBLE Ø53X360 | FLEXIBLE TUBE Ø53X360 | 1 | 1 | 1 | | | | | | | | |
| | 12009962 | ABRAZADERA 40*60 | CLAMP 40*60 | 2 | 2 | 2 | | | | | | | | |
| | | | | | | | | | | | | | | |
| | | | | | | | | | | | | | | |

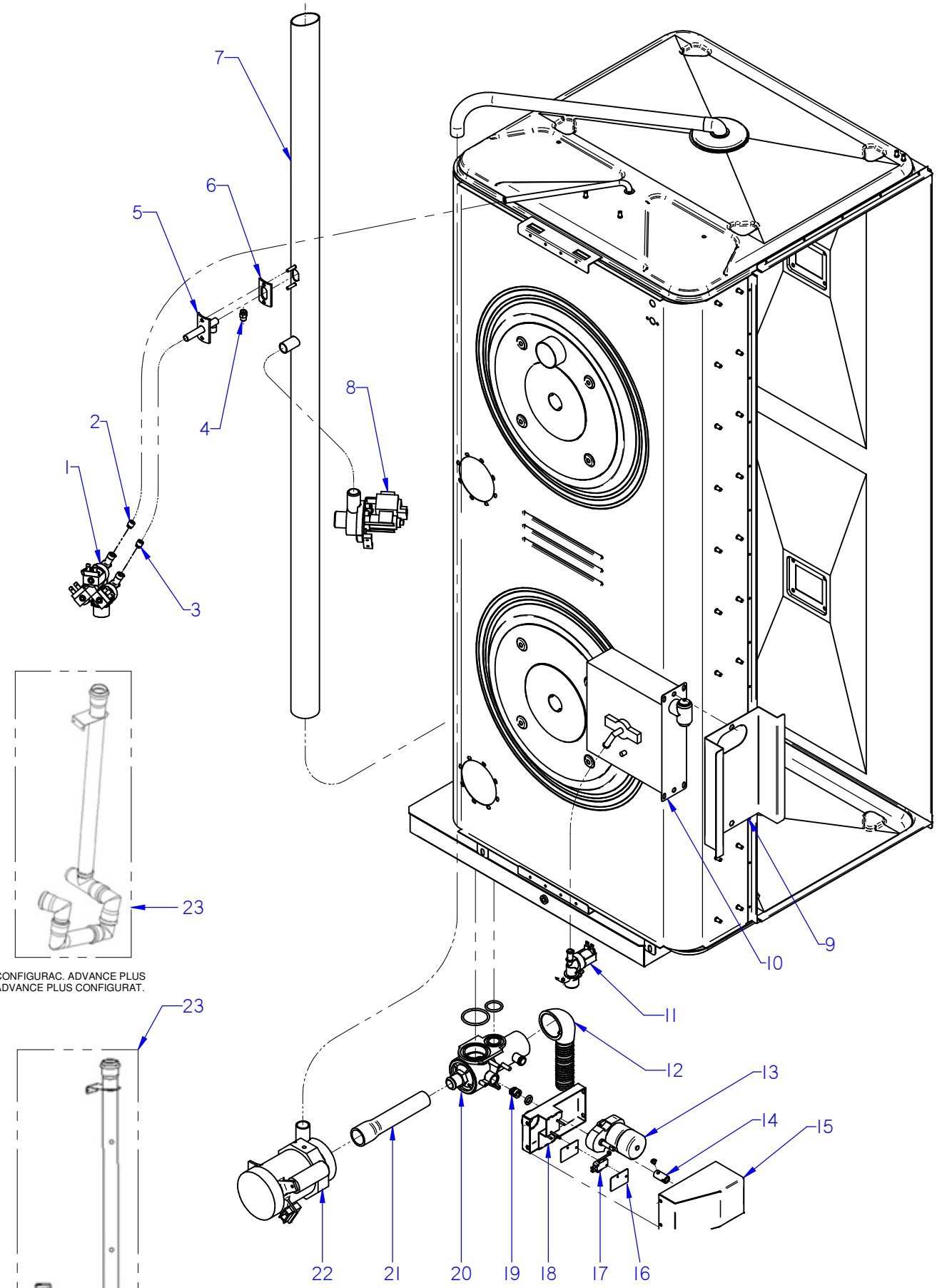


ITEM MARCADO EN COLOR = REPUESTO RECOMENDADO
COLOURED ITEM = RECOMMENDED SPARE PART

| Nº plano / N º plane | Firma | Fecha / Date | Denominación / Denomination: CONDUCCIONES DE AGUA / WATER PIPES | Lamina / Sheet | |
|---|---|---|---|---|---|
| C-3078 | | 2012-09 | HORNOS AG; ACG; APG-201 | 7 | Fagor Industrial S.Coop. FAGOR Oñate |

| MOD. | HORNOS / OVEN | ZONA / ZONE | CONDUCCIONES DE AGUA / WATER PIPES | PLANO DIAGRAM | C-3078 |
|---|---|---|---|---|---|

| ITEM | CODIGO REFERENCE | DENOMINACION | DENOMINATION | ACG-201 | AG-201 | APG-201 | | | | | | ELIMINADO ELIMINATED | INTRODUCID. INTRODUCED | NOTAS |
|---|---|---|---|---|---|---|---|---|---|---|---|---|---|---|
| 1 | 12025161 | ELECTRO. 230VAC 50/60Hz 1VIA | SOLENOID VALVE 230VAC 1 V | 1 | _ | _ | | | | | | | | |
| 1 | 12023921 | ELECTR. 230V AC 50/60Hz 3 VIAS A | SOLENOID 230V AC 50/60Hz 3 V | _ | 1 | 1 | | | | | | | | |
| 2 | 12008692 | REGULADOR 0,5L. NARANJA | REGULATOR 0,5L. NARANJA | 1 | _ | _ | | | | | | 01.12.13 | | |
| 2 | 12096624 | REGULADOR 0,5 L ROJO | REGULATOR 0,5 L | 1 | _ | _ | | | | | | | 01.12.13 | |
| 2 | 12024509 | REGULADOR 0,25L. VERDE | REGULATOR 0.25 L. GREEN | _ | 1 | 1 | | | | | | | | |
| 3 | 12025263 | REGULADOR 1L AMARILLO 255.005 | CONTROLLER YELL. 1L 255,005 | _ | 1 | 1 | | | | | | 01.12.13 | | |
| 3 | 12096625 | REGULADOR 1 L MARFIL | CONTROLLER 1L IVORY | _ | 1 | 1 | | | | | | | 01.12.13 | |
| 4 | 12024000 | TOBERA 1/8 | NOZZLE 1/8 | _ | 1 | 1 | | | | | | 31.03.13 | | |
| 4 | 12049131 | BOQUILLA 1/8M-B-1-3 | INJECTOR 1/8M-B-1-3 | _ | 1 | 1 | | | | | | | 31.03.13 | |
| 5 | 12046239 | AMARRE CONDUCC. VAHOS GAS | MOORING DRIVE GAS STEAM | 1 | _ | _ | | | | | | | | |
| 5 | 12039468 | CONDUCC. VAHOS COMPLETO | COMPLETE VAPOUR DUCT | _ | 1 | 1 | | | | | | | | |
| 6 | 12023605 | JUNTA TUBO INYECTOR | INJECTOR PIPE SEAL | 1 | 1 | 1 | | | | | | | | |
| 7 | 12043995 | CHIMENEA COMPLETA 201 ACE | COMPL. FLUEPIPE 201 ACE | 1 | _ | _ | | | | | | | | |
| 7 | 12041127 | CHIMENEA COMPLETA 201 ADV | COMPLET FLUEPIPE 201 ADV | _ | 1 | 1 | | | | | | | | |
| S/Nº | 12024463 | CONDENSADOR ELEC. 250V VDE | CONDENSER ELEC. 250V VDE | 1 | 1 | 1 | | | | | | | | |
| S/Nº | 11000003 | TUBO SILICONA ALTA Tª Ø53x61 | HIGH SILICON PIPE Tº Ø53x61 | 1 | 1 | 1 | | | | | | 01.01.13 | | |
| S/Nº | 12047901 | EMPALME SILICONA Ø53 | SILICONE JOINT Ø53 | 1 | 1 | 1 | | | | | | | 01.01.13 | |
| | 12007943 | ABRAZADERA ELASTICA 62*66 | ELAST. CLAMP 62*66 | 2 | 2 | 2 | | | | | | | | |
| 8 | 12039546 | MOTOBOMBA 230V AC 1N 50/60Hz | PUMP 230V AC 50/60Hz 30W 1N | _ | 1 | 1 | | | | | | | | |
| | 12009944 | ARANDELA A5 | FLAT WASHER A.5 | _ | 2 | 2 | | | | | | | | |
| | 12009890 | ARANDELA ABANICO A5 A.304 | FAN SHAPED WASHER A.5 | _ | 2 | 2 | | | | | | | | |
| | 12010221 | TORNILLO EXAGONAL M5X15 | HEXAGONAL BOLT M5X15 | _ | 2 | 2 | | | | | | | | |
| | 12010126 | REMACHE EXAGONAL M.6 | HEXAGONAL RIVET M.6 | _ | 2 | 2 | | | | | | | | |
| 9 | 12039369 | SOPORTE DUCHA 202 | SHOWER 202 STAND | _ | 1 | 1 | | | | | | 28.03.14 | | |
| 10 | 12024800 | DUCHA | SHOWER | _ | 1 | 1 | | | | | | | | |
| | 12010267 | ARANDELA 16X6X1.2 A.304 | FLAT WASHER 16X6X1.2 A.304 | _ | 2 | 2 | | | | | | | | |
| | 12009882 | ARANDELA ABANICO A6 A.304 | FAN SHAPED WASHER A.6 | _ | 2 | 2 | | | | | | | | |
| | 12010186 | TORNILLO EXAGONAL M6X15 A304 | HEXAGONAL SCREW M6X15 | _ | 2 | 2 | | | | | | | | |
| 11 | 12025161 | ELECTROVALV. 230VAC 50/60Hz 1V | SOLENOID VALVE 230VAC 1 V | _ | 1 | 1 | | | | | | | | |
| 12 | 12024473 | MANGUERA DESAGUE | DRAIN HOSE | _ | _ | 1 | | | | | | 02.12.12 | | |
| 13 | 12024754 | MOTORREDUCTOR 230V AC 1N | MOTOREDUCER 230V AC 1N | _ | _ | 1 | | | | | | | | |

| MOD. | HORNOS / OVEN | ZONA / ZONE | CONDUCCIONES DE AGUA / WATER PIPES | PLANO DIAGRAM | C-3078 |
|---|---|---|---|---|---|

| ITEM | CODIGO REFERENCE | DENOMINACION | DENOMINATION | ACG-201 | AG-201 | APG-201 | | | | | | ELIMINADO ELIMINATED | INTRODUCID. INTRODUCED | NOTAS |
|---|---|---|---|---|---|---|---|---|---|---|---|---|---|---|
| 14 | 12023906 | CASQUILLO MOTOR MICRO | MICRO MOTOR BUSHING | _ | _ | 1 | | | | | | | | |
| | 12009876 | TORNILLO ALOMADO M4X6 H.ZIN. | CURVED SCREW M4X6 H.ZIN. | _ | _ | 2 | | | | | | | | |
| | 12010262 | TORNILLO AVELLANADO M4X15 | COUNTERSUNK SCREW M.4x15 | _ | _ | 2 | | | | | | | | |
| 15 | 12003203 | TAPA SISTEMA LAVADO | TOP WASH SYSTEM | _ | _ | 1 | | | | | | | | |
| | 12010242 | TORNIL. APLASTADO M5X13 A 304 | FLAT SCREW M.5x13 | _ | _ | 4 | | | | | | | | |
| 16 | 12009985 | PLACA SEPARADORA | SPACER PLATE | _ | _ | 4 | | | | | | | | |
| | 12010247 | TORNILLO ALOMADO M3X20 | CURVED SCREW M3X20 | _ | _ | 7 | | | | | | | | |
| | 12010289 | TUERCA AUTOBLOCANTE M3 | SELF-LOCKING NUT M3 | _ | _ | 7 | | | | | | | | |
| 17 | 12025193 | INTERRUPTOR PUERTA | DOOR SWITCH | _ | _ | 2 | | | | | | | | |
| 18 | 12003183 | SOPORTE MICROS LAVADO | MICROS WASH STAND | _ | _ | 1 | | | | | | | | |
| | 12010163 | REMACHE EXAGONAL M.5 | HEXAGONAL RIVET M.5 | _ | _ | 4 | | | | | | | | |
| 19 | 12023796 | PUNTA ACOPLE MOTOR A VALVUL | CONN. POINT MOTOR TO VALVE | _ | _ | 1 | | | | | | | | |
| | 12019645 | JUNTA TORICA Ø10x3.5 | O-RING Ø10X3.5 | _ | _ | 1 | | | | | | | | |
| S/Nº | 12010273 | MANG. SUJEC. 4X14 DIN1481 | CLAMPING SLEEVE 4x14 DIN 148 | _ | _ | 1 | | | | | | | | |
| 20 | 12024796 | CUERPO VALVULA COMPLETO | COMPLETE VALVE BODY | _ | _ | 1 | | | | | | | | |
| | 12010081 | JUNTA TORICA Ø52X3,5 | O-RING Ø52X3.5 | _ | _ | 1 | | | | | | | | |
| | 12010131 | JUNTA TORICA Ø33x3,5 | O-RING Ø33x3.5 | _ | _ | 1 | | | | | | | | |
| | 12024532 | JUNTA TEFLON VALVULA | TEFLON VALVE BOARD | _ | _ | 2 | | | | | | | | |
| | 12009181 | JUNTA TEFLON VALVULA | TEFLON VALVE BOARD | _ | _ | 2 | | | | | | | | |
| 21 | 12024407 | GOMA VALVULA BOMBA GAS | PUMP VALVE RUBBER | _ | _ | 1 | | | | | | | | |
| | 12010023 | ABRAZADERA 20-32 | CLAMP 20-32 | _ | _ | 1 | | | | | | | | |
| | 12009997 | ABRAZADERA 25-40 | CLAMP 25-40 | _ | _ | 1 | | | | | | | | |
| 22 | 12024782 | MOTOBOMBA 230V AC 1N 50Hz | MOTOR 230V AC 1N 50Hz 74,6 | _ | _ | 1 | | | | | | | | |
| | 12009868 | ARANDELA PLANA INOX 6MM | WASHER FLAT 6 MM INOX. | _ | _ | 2 | | | | | | | | |
| | 12009882 | ARANDELA ABANICO A6 A.304 | FAN SHAPED WASHER A.6 | _ | _ | 2 | | | | | | | | |
| | 12010186 | TORNILLO EXAGONAL M6X15 A304 | HEXAGONAL SCREW M6X15 | _ | _ | 2 | | | | | | | | |
| **S/Nº** | **12093684** | **KIT VALVULA DESAGUE ADVAN.** | **VALVE DRAIN ADVANCE KIT** | _ | _ | **1** | | | | | | | **12.07.13** | |
| S/Nº | 12025198 | MANGUERA ENTRADA AGUA | WATER INLET HOSE | 1 | 1 | 1 | | | | | | | | |
| 23 | 12047404 | MOD CONJUNTO DESAGUE ADV | ADV DRAIN SET MODEL | 1 | 1 | 1 | | | | | | | 03,12,12 | |
| | | | | | | | | | | | | | | |
| | | | | | | | | | | | | | | |

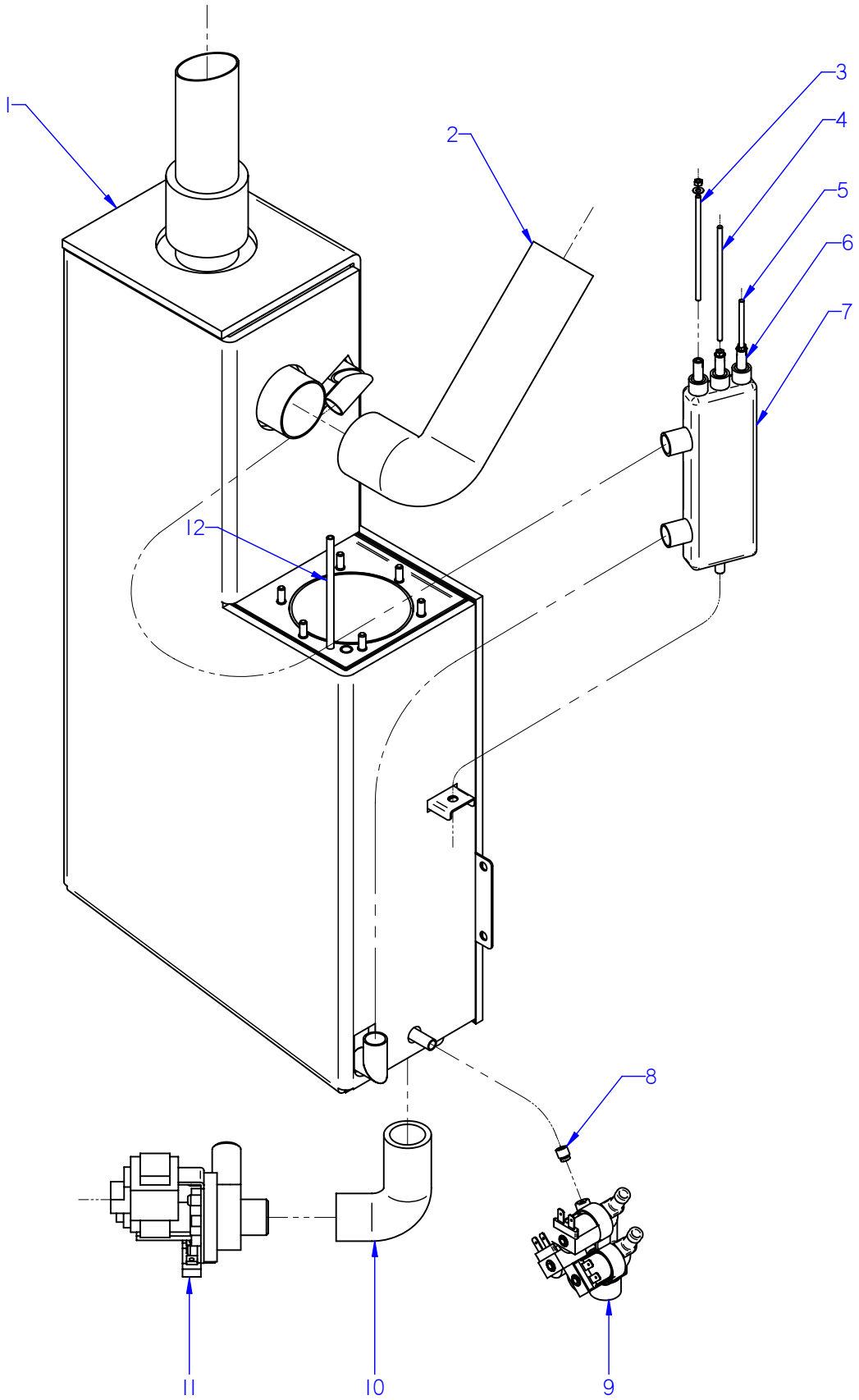


ITEM MARCADO EN COLOR = REPUESTO RECOMENDADO
COLOURED ITEM = RECOMMENDED SPARE PART

| Nº plano / N º plane | Firma | Fecha / Date | Denominación / Denomination: CIRCUITO DE VAPOR / STEAM CIRCUIT | Lamina / Sheet | |
|---|---|---|---|---|---|
| C-3079 | | 2012-09 | HORNOS AG; APG-201 | 8 | Fagor Industrial S.Coop. Oñate FAGOR |

| MOD. | HORNOS / OVEN | ZONA / ZONE | CIRCUITO DE VAPOR / STEAM CIRCUIT | PLANO DIAGRAM | C-3079 |
|---|---|---|---|---|---|

| ITEM | CODIGO REFERENCE | DENOMINACION | DENOMINATION | AG-201 | APG-201 | | | | | | | ELIMINADO ELIMINATED | INTRODUCID. INTRODUCED | NOTAS |
|---|---|---|---|---|---|---|---|---|---|---|---|---|---|---|
| **1** | **12046107** | **KIT GENERADOR VAPOR 201** | **STEAM GENERATOR 201 KIT** | **1** | **1** | | | | | | | | | |
| 2 | 12041855 | TUBO FLEXIBLE Ø53X360 VARILLA | FLEXIBLE TUBE Ø53X360 | 1 | 1 | | | | | | | 01.01.13 | | |
| 2 | 12047890 | EMPALME GENERADOR AG 201 | GENERATOR JOINT AG 201 | 1 | 1 | | | | | | | | 01.01.13 | |
| S/Nº | 12047901 | EMPALME SILICONA Ø53 | SILICONE JOINT Ø53 | 2 | 2 | | | | | | | | 01.01.13 | |
| | 12009962 | ABRAZADERA 40-60 | CLAMP 40-60 | 2 | 2 | | | | | | | | | |
| 3 | 12023573 | ELECTRODO ALTO | HIGH LEVEL ELECTRODE | 1 | 1 | | | | | | | | | |
| 4 | 12023574 | ELECTRODO BAJO | LOW LEVEL ELECTRODE | 1 | 1 | | | | | | | | | |
| 5 | 12023575 | ELECTRODO DE MASA | EARTH ELECTRODE | 1 | 1 | | | | | | | | | |
| | 12009987 | ARANDELA A4 | FLAT WASHER A4 | 3 | 3 | | | | | | | | | |
| | 12009839 | TUERCA EXAGONAL M4 | HEXAGONAL NUT M.4º | 3 | 3 | | | | | | | | | |
| 6 | 12024460 | GUIA AISLANTE | INSULATION GUIDE | 3 | 3 | | | | | | | | | |
| 7 | 12024419 | BOTE DE NIVELES | LEVELS VESSEL | 1 | 1 | | | | | | | 02.06.14 | | |
| 7 | 12113061 | BOTE DE NIVELES | LEVELS VESSEL | 1 | 1 | | | | | | | | 02.06.14 | |
| | 12010044 | TUERCA EXAGONAL M8 PLASTIC | HEXAGONAL NUT M8 PLASTIC | 1 | 1 | | | | | | | | | |
| S/Nº | 11000157 | TUBO SILICONA Tº Ø 26*18 | HIGH SILICON PIPE Tº Ø 26*18 | 2 | 2 | | | | | | | | | |
| | 12009628 | ABRAZADERA ELASTICA 26,7*28,1 | ELAST. CLAMP 26,7*28,1 | 4 | 4 | | | | | | | | | |
| 8 | 12024045 | REGULADOR 8L 54.034 ROJO | REGULATOR 8L RED 54.034 | 1 | 1 | | | | | | | 10.11.13 | | |
| 8 | 12096626 | REGULADOR 8 L AZUL | BLUE REGULATOR 8L | 1 | 1 | | | | | | | | 10.11.13 | |
| 9 | 12023921 | ELECTR. 230V AC 50/60Hz 3 VIAS A | SOLENOID 230V AC 50/60Hz 3 V | 1 | 1 | | | | | | | | | |
| S/Nº | 11000083 | T. GOMA NEGRA Ø17*10 | BLACK RUBBER PIPE Ø17*10 | 1 | 1 | | | | | | | | | |
| | 12010036 | ABRAZADERA 12*20 | CLAMP 12-20 | 2 | 2 | | | | | | | | | |
| 10 | 12039649 | TUBO DESAGUE GENERADOR | DRAIN TUBE GENERATOR | 1 | 1 | | | | | | | | | |
| | 12009997 | ABRAZADERA 25-40 | CLAMP 25-40 | 2 | 2 | | | | | | | | | |
| 11 | 12039546 | MOTOBOMBA 230V AC 1N 50/60Hz | PUMP 230V AC 50/60Hz 30W 1N | 1 | 1 | | | | | | | | | |
| 12 | 12023901 | CONJUN. TERMOPAR VAPOR | STEAM THERMOCOUPLE UNIT | 1 | 1 | | | | | | | | | |
| | | | | | | | | | | | | | | |
| | | | | | | | | | | | | | | |
| | | | | | | | | | | | | | | |
| | | | | | | | | | | | | | | |
| | | | | | | | | | | | | | | |
| | | | | | | | | | | | | | | |

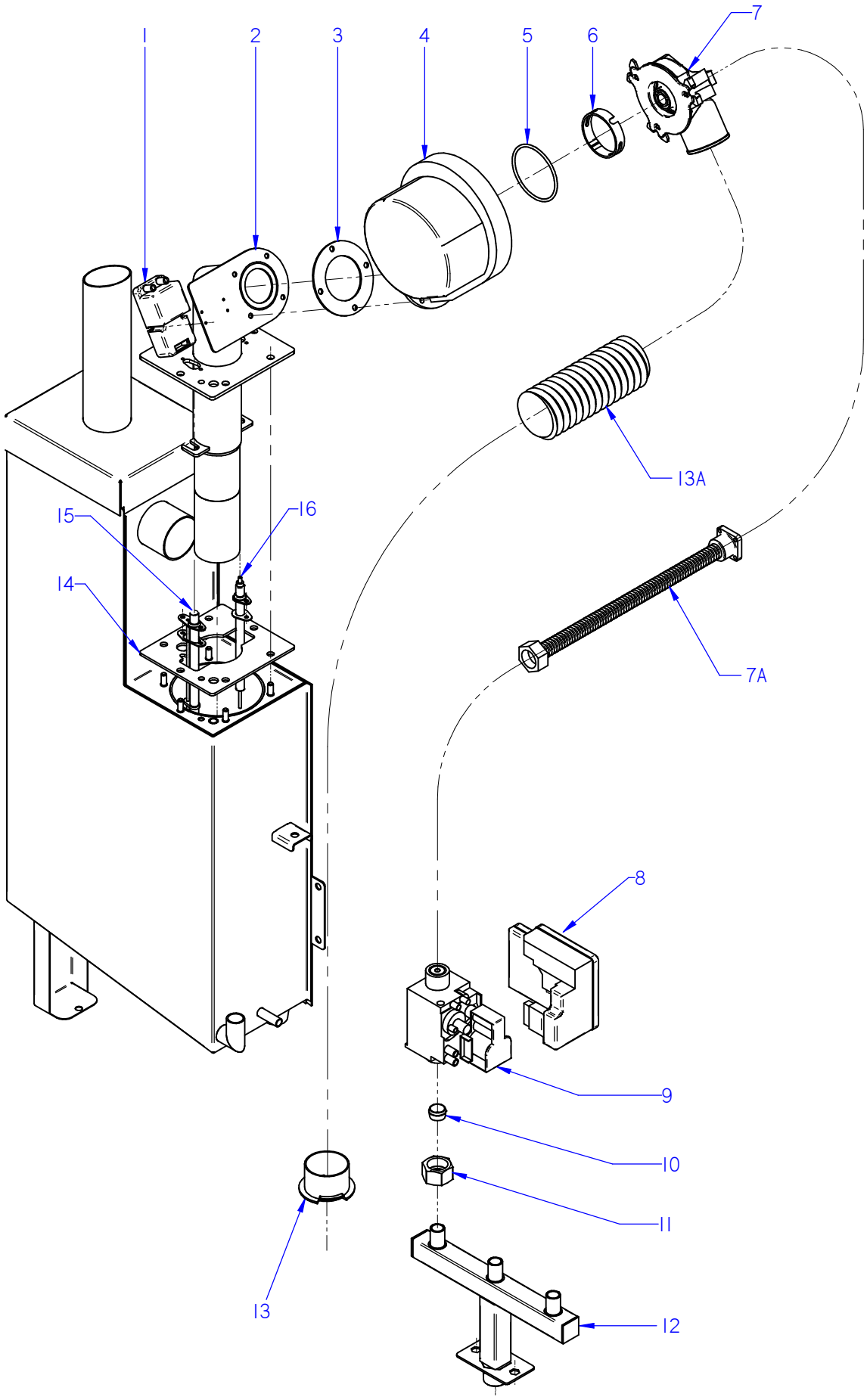


ITEM MARCADO EN COLOR = REPUESTO RECOMENDADO
COLOURED ITEM = RECOMMENDED SPARE PART

| Nº plano / N º plane | Firma / Signature | Fecha / Date | Denominación / Denomination: FUNC. GAS GENERADOR / FUNCT. GAS GENERATOR | Lamina / Sheet | |
|---|---|---|---|---|---|
| C-3080 | Iban R. | 2014-09 | HORNOS AG; APG-201 | 9 | Fagor Industrial S.Coop. FAGOR Oñate |

| MOD. | HORNOS / OVEN | ZONA / ZONE | FUNCIONAL GAS GENERADOR<br>FUNCTIONAL GAS GENERATOR | PLANO<br>DIAGRAM | C-3080 |
|---|---|---|---|---|---|

| ITEM | CODIGO<br>REFERENCE | DENOMINACION | DENOMINATION | AG-201 | APG-201 | | | | | | | ELIMINADO<br>ELIMINATED | INTRODUCID.<br>INTRODUCED | NOTAS |
|---|---|---|---|---|---|---|---|---|---|---|---|---|---|---|
| 1 | 12039544 | CHISPA BRAHMA | BRAHMA SPARK | 1 | 1 | | | | | | | | | |
| | 12009971 | TORNILLO ALOMADO M3X30 H.ZIN | CURVED SCREW M3X30 H.ZINC | 2 | 2 | | | | | | | | | |
| | 12010289 | TUERCA AUTOBLOCANTE M3 | SELF-LOCKING NUT M3 | 2 | 2 | | | | | | | | | |
| 2 | 12044424 | QUEMADOR GENERADOR 201G | BURNER GENERATOR 201G | 1 | 1 | | | | | | | | | |
| 3 | 12045252 | JUNTA ACOP.SOPLANTE GRAFITO | JOINT COU. GRAPHITE BLOWER | 1 | 1 | | | | | | | | | |
| | 12009944 | ARANDELA A5 | FLAT WASHER A.5 | 4 | 4 | | | | | | | | | |
| | 12009890 | ARANDELA ABANICO A5 A.304 | FAN SHAPED WASHER A.5 | 4 | 4 | | | | | | | | | |
| | 12010284 | TORNILLO EXAGONAL M5 INOX. | HEXAGONAL SCREW M5 INOX. | 4 | 4 | | | | | | | | | |
| | 12010221 | TORNILLO EXAGONAL M5X15 INOX | HEXAGONAL SCREW M5X15 INO | 4 | 4 | | | | | | | | | |
| 4 | 12044607 | SOPLANTE NRG 118 55kw | BLOWER NRG 118 55kw | 1 | 1 | | | | | | | | | |
| 5 | 12009940 | JUNTA TORICA114x3 | O-RING 114x3 | 1 | 1 | | | | | | | | | |
| 6 | 12044292 | ARO VENTURI VERDE | GREEN RING VENTURI | 1 | 1 | | | | | | | | | |
| 7 | 12039540 | MIXER COMPLETO | MIXER COMPLETE | 1 | 1 | | | | | | | | | |
| | 12009868 | ARANDELA PLANA INOX 6MM | WASHER FLAT 6 MM INOX. | 3 | 3 | | | | | | | | | |
| | 12010084 | TORNILLO ALLEN INOX M6X40MM | SCREW ALLEN INOX M6X40MM | 3 | 3 | | | | | | | | | |
| S/Nº | 12041612 | JUNTA TORICA 63X3 | O-RING 63X3 | 1 | 1 | | | | | | | | | |
| 7A | 12040731 | TUBO GAS FLEXIBLE 900-90º | FLEXIBLE GAS PIPE 900-90º | 1 | 1 | | | | | | | | | |
| 8 | 12039440 | CAJA CONTROL DBC 579 | DBC CONTROL BOX 579 | 1 | 1 | | | | | | | | | |
| 9 | 12046364 | VALVULA REGUL 50HZ ADV | ADV 50HZ VALVE CONTROLL. | 1 | 1 | | | | | | | | | |
| 9 | 12046365 | VALVULA REGUL 60HZ ADV | ADV 60HZ VALVE CONTROLL. | 1 | 1 | | | | | | | | | |
| 10 | 12045672 | TOBERA Ø 5,4 BP | NOZZLE Ø 5,4 BP | 1 | 1 | | | | | | | | | |
| 10 | _____ | GN (SIN INYECTOR) | (WITHOUT INJECTOR)GN | 1 | 1 | | | | | | | | | |
| 11 | 12008085 | TUERCA 3/4 | NUT 3/4 | 1 | 1 | | | | | | | 18.02.13 | | |
| 11 | 12048850 | TUERCA G 3/4 | NUT G 3/4 | 1 | 1 | | | | | | | | 18.02.13 | |
| 12 | 12041051 | ENTRADA GAS CO. ADV 202 SUB | ADV GAS INLET ADV 202 SUB | 1 | 1 | | | | | | | | | |
| | 12009944 | ARANDELA A5 | FLAT WASHER A.5 | 2 | 2 | | | | | | | | | |
| | 12009890 | ARANDELA ABANICO A5 A.304 | FAN SHAPED WASHER A.5 | 2 | 2 | | | | | | | | | |
| | 12010221 | TORNILLO EXAGONAL M5X15 INOX | HEXAGONAL SCREW M5X15 INO | 2 | 2 | | | | | | | | | |
| S/Nº | 12008775 | BICONO Ø16 | BICONE Ø16 | 1 | 1 | | | | | | | | | |
| 13 | 12039679 | AMARRE TUBOS AIRE | MOORING PIPES AIR | 1 | 1 | | | | | | | | | |
| 13A | 11000232 | TUBO AIRE VULCANO PUZ 50 | AIR TUBE VULCANO PUZ 50 | 1 | 1 | | | | | | | | | |

| MOD. | HORNOS / OVEN | ZONA / ZONE | FUNCIONAL GAS GENERADOR<br>FUNCTIONAL GAS GENERATOR | PLANO<br>DIAGRAM | C-3080 |
|---|---|---|---|---|---|

| ITEM | CODIGO REFERENCE | DENOMINACION | DENOMINATION | AG-201 | APG-201 | | | | | | | ELIMINADO ELIMINATED | INTRODUCID. INTRODUCED | NOTAS |
|---|---|---|---|---|---|---|---|---|---|---|---|---|---|---|
| 14 | 12044286 | JUNTA QUEMADOR GENERA 102 | GENERATOR GASKET BURNER | 1 | 1 | | | | | | | | | |
| | 12009868 | ARANDELA PLANA INOX 6MM | WASHER FLAT 6 MM INOX. | 4 | 4 | | | | | | | | | |
| | 12009882 | ARANDELA ABANICO A6 A.304 | FAN SHAPED WASHER A.6 | 4 | 4 | | | | | | | | | |
| | 12010130 | TUERCA EXAGONAL M6 LATON | HEXAGONAL NUT M6 BRASS | 4 | 4 | | | | | | | | | |
| 15 | 12039430 | BUJIA GENERADOR 202 | PLUG GENERATOR 202 | 1 | 1 | | | | | | | | | |
| S/Nº | 12039587 | JUNTA BUJIA GENERADOR 06/101 | PLUG BOARD GENERATOR 06/10 | 1 | 1 | | | | | | | | | |
| | 12045140 | TORNILLO M4X10 LATON | SCREW M4 BRASS | 2 | 2 | | | | | | | | | |
| | 12010244 | TUERCA EXAGONAL M4 LATON | HEXAGONAL NUT M4 BRASS | 2 | 2 | | | | | | | | | |
| 16 | 12039431 | DETECTOR GENERADOR 202 | GENERATOR SENSOR 202 | 1 | 1 | | | | | | | | | |
| S/Nº | 12039450 | JUNTA BUJIA CONVECCION 102 | SPARK CONVECTI. BOARD 102 | 1 | 1 | | | | | | | | | |
| | 12045140 | TORNILLO M4X10 LATON | SCREW M4 BRASS | 2 | 2 | | | | | | | | | |
| | 12010244 | TUERCA EXAGONAL M4 LATON | HEXAGONAL NUT M4 BRASS | 2 | 2 | | | | | | | | | |

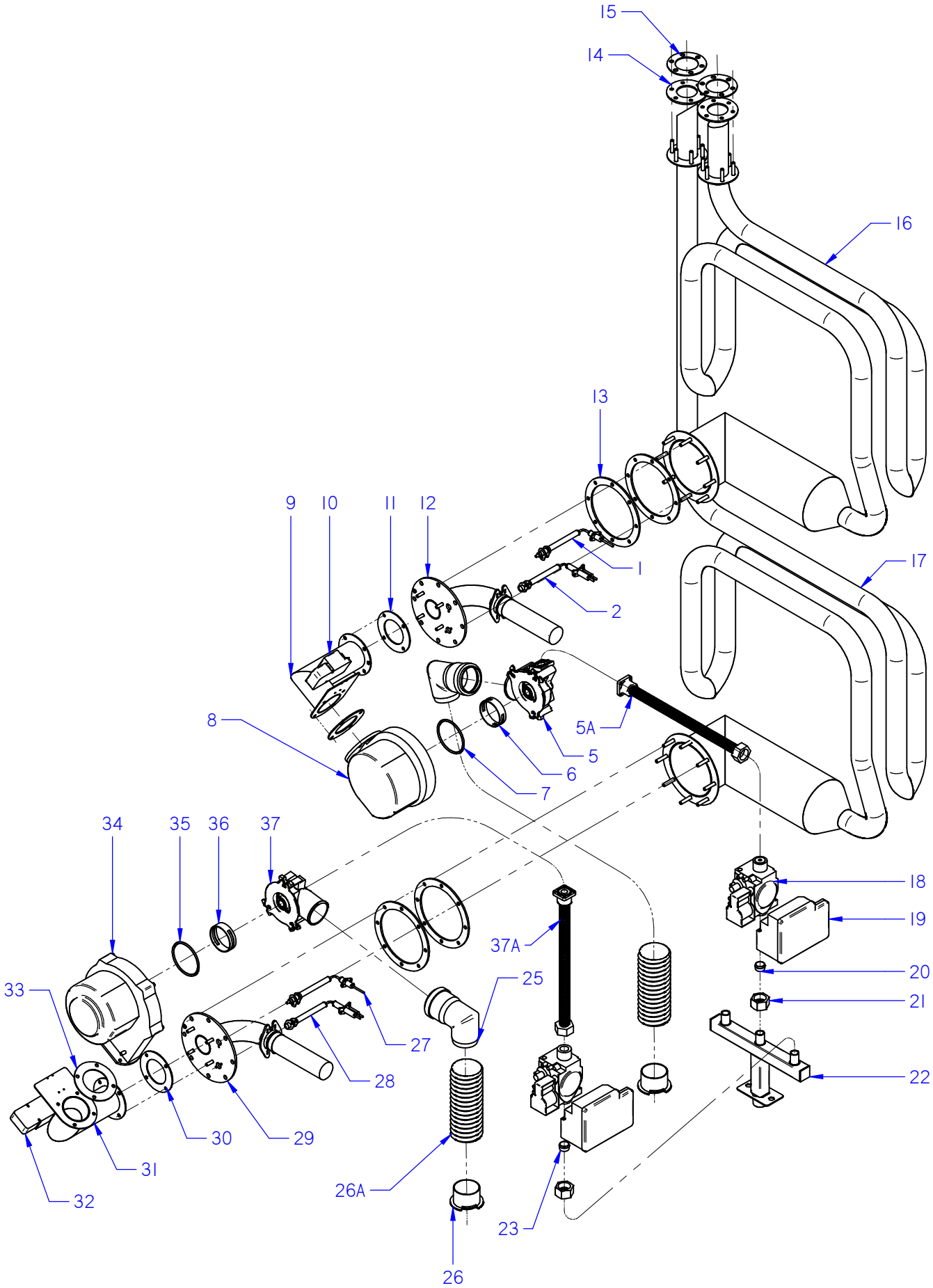


ITEM MARCADO EN COLOR = REPUESTO RECOMENDADO
COLOURED ITEM = RECOMMENDED SPARE PART

| Nº plano / N º plane | Firma | Fecha / Date | Denominación / Denomination:FUNC. GAS CONVECCION / FUNCT. GAS CONVECTION | Lamina / Sheet | |
|---|---|---|---|---|---|
| C-3081 | Iban R. | 2014-09 | HORNOS AG; ACG; APG-201 | 10 | Fagor Industrial S.Coop. FAGOR Oñate |

| MOD. | HORNOS / OVEN | ZONA / ZONE | FUNCIONAL GAS CONVECCION<br>FUNCTIONAL GAS CONVECTION | PLANO<br>DIAGRAM | C-3081 |
|---|---|---|---|---|---|

| ITEM | CODIGO REFERENCE | DENOMINACION | DENOMINATION | ACG-201 | AG-201 | APG-201 | | | | | | ELIMINADO ELIMINATED | INTRODUCID. INTRODUCED | NOTAS |
|---|---|---|---|---|---|---|---|---|---|---|---|---|---|---|
| 1 | 12039685 | DETECTOR CONVECCION 061 | CONVECTION DETECTOR 061 | 1 | 1 | 1 | | | | | | | | |
| S/Nº | 12039450 | JUNTA BUJIA CONVECCION 102 | PLUG BOARD CONVECTION 102 | 1 | 1 | 1 | | | | | | | | |
| | 12045140 | TORNILLO M4X10 LATON | SCREW M4 BRASS | 2 | 2 | 2 | | | | | | | | |
| | 12010244 | TUERCA EXAGONAL M4 LATON | HEXAGONAL NUT M4 BRASS | 2 | 2 | 2 | | | | | | | | |
| 2 | 12039684 | BUJIA CONVECCION 061 | SPARK CONVECTION 061 | 1 | 1 | 1 | | | | | | | | |
| S/Nº | 12039449 | 102 JUNTA BUJIA CONVECCION | 102 SPARK CONVECTI. BOARD | 1 | 1 | 1 | | | | | | | | |
| | 12045140 | TORNILLO M4X10 LATON | SCREW M4 BRASS | 2 | 2 | 2 | | | | | | | | |
| | 12010244 | TUERCA EXAGONAL M4 LATON | HEXAGONAL NUT M4 BRASS | 2 | 2 | 2 | | | | | | | | |
| 3 | 12044447 | TUBO DESAGUE ADV 01 | DRAIN PIPE ADV 01 | 1 | 1 | 1 | | | | | | | | |
| 4 | 12045252 | JUNTA ACOP.SOPLANTE GRAFITO | JOINT COU. GRAPHITE BLOWER | 1 | 1 | 1 | | | | | | | | |
| | 12009944 | ARANDELA A5 | FLAT WASHER A.5 | 4 | 4 | 4 | | | | | | | | |
| | 12009890 | ARANDELA ABANICO A5 A.304 | FAN SHAPED WASHER A.5 | 4 | 4 | 4 | | | | | | | | |
| | 12010284 | TORNILLO EXAGONAL M5 INOX. | HEXAGONAL SCREW M5 INOX. | 4 | 4 | 4 | | | | | | | | |
| 5 | 12039540 | MIXER COMPLETO | MIXER COMPLETE | 1 | 1 | 1 | | | | | | | | |
| | 12009868 | ARANDELA PLANA INOX 6MM | WASHER FLAT 6 MM INOX. | 3 | 3 | 3 | | | | | | | | |
| | 12010084 | TORNILLO ALLEN INOX M6X40MM | SCREW ALLEN INOX M6X40MM | 3 | 3 | 3 | | | | | | | | |
| S/Nº | 12041612 | JUNTA TORICA 63X3 | O-RING 63X3 | 1 | 1 | 1 | | | | | | | | |
| 5A | 12040731 | TUBO GAS FLEXIBLE 900-90º | FLEXIBLE GAS PIPE 900-90º | 1 | 1 | 1 | | | | | | | | |
| 6 | 12039541 | ARO VENTURI ROJO | RED RING VENTURI | 1 | 1 | 1 | | | | | | | | |
| 7 | 12009940 | JUNTA TORICA114x3 | O-RING 114x3 | 1 | 1 | 1 | | | | | | | | |
| 8 | 12044607 | SOPLANTE NRG 118 55kw | BLOWER NRG 118 55kw | 1 | 1 | 1 | | | | | | | | |
| 9 | 12039560 | CAMARA SILENCIADOR 101 | CHAMBER MUFFLER 101 | 1 | 1 | 1 | | | | | | | | |
| | 12010221 | TORNILLO EXAGONAL M5X15 INOX | HEXAGONAL SCREW M5X15 INO | 4 | 4 | 4 | | | | | | | | |
| 10 | 12039544 | CHISPA BRAHMA | BRAHMA SPARK | 1 | 1 | 1 | | | | | | | | |
| | 12009971 | TORNILLO ALOMADO M3X30 H.ZIN | CURVED SCREW M3X30 H.ZINC | 2 | 2 | 2 | | | | | | | | |
| | 12010289 | TUERCA AUTOBLOCANTE M3 | SELF-LOCKING NUT M3 | 2 | 2 | 2 | | | | | | | | |
| 11 | 12045252 | JUNTA ACOP.SOPLANTE GRAFITO | JOINT COU. GRAPHITE BLOWER | 1 | 1 | 1 | | | | | | | | |
| | 12009944 | ARANDELA A5 | FLAT WASHER A.5 | 4 | 4 | 4 | | | | | | | | |
| | 12009890 | ARANDELA ABANICO A5 A.304 | FAN SHAPED WASHER A.5 | 4 | 4 | 4 | | | | | | | | |
| | 12010284 | TORNILLO EXAGONAL M5 INOX. | HEXAGONAL SCREW M5 INOX. | 4 | 4 | 4 | | | | | | | | |
| 12 | 12039556 | QUEMADOR CONVECCION 101 | BURNER CONVECTION 101 | 1 | 1 | 1 | | | | | | | | |

| MOD. | HORNOS / OVEN | ZONA / ZONE | FUNCIONAL GAS CONVECCION<br>FUNCTIONAL GAS CONVECTION | PLANO<br>DIAGRAM | C-3081 |
|---|---|---|---|---|---|

| ITEM | CODIGO REFERENCE | DENOMINACION | DENOMINATION | ACG-201 | AG-201 | APG-201 | | | | | | ELIMINADO ELIMINATED | INTRODUCID. INTRODUCED | NOTAS |
|---|---|---|---|---|---|---|---|---|---|---|---|---|---|---|
| 13 | 12039559 | JUNTA AMARRE QUEMADOR 101 | BURNER TIE BOARD 101 | 2 | 2 | 2 | | | | | | | | |
| | 12009868 | ARANDELA PLANA INOX 6MM | WASHER FLAT 6 MM INOX. | 8 | 8 | 8 | | | | | | | | |
| | 12009882 | ARANDELA ABANICO A6 A.304 | FAN SHAPED WASHER A.6 | 8 | 8 | 8 | | | | | | | | |
| | 12010130 | TUERCA EXAGONAL M6 LATON | HEXAGONAL NUT M6 BRASS | 8 | 8 | 8 | | | | | | | | |
| 14 | 12039474 | JUNTA SALIDA INTERCAMBOR 201 | OUTPUT BOARD EXCHANG. 201 | 1 | 1 | 1 | | | | | | | | |
| | 12009868 | ARANDELA PLANA INOX 6MM | WASHER FLAT 6 MM INOX. | 12 | 12 | 12 | | | | | | | | |
| | 12009882 | ARANDELA ABANICO A6 A.304 | FAN SHAPED WASHER A.6 | 12 | 12 | 12 | | | | | | | | |
| | 12010130 | TUERCA EXAGONAL M6 LATON | HEXAGONAL NUT M6 BRASS | 12 | 12 | 12 | | | | | | | | |
| 15 | 12039517 | AMARRE SALIDA CUERPO INT 101 | INSIDE OUT BODY TIE 101 | 1 | 1 | 1 | | | | | | | | |
| 16 | 12039473 | INTERCAMB. CALOR SUPER. 201 | TOP HEAT EXCHANGER 201 | 1 | 1 | 1 | | | | | | | | |
| 17 | 12040734 | INTERCAMBIAD. CALOR INFERIOR | BOTTOM HEAT EXCHANGER 201 | 1 | 1 | 1 | | | | | | | | |
| 18 | 12046364 | VALVULA REGUL 50HZ ADV | ADV 50HZ VALVE CONTROLL. | 2 | 2 | 2 | | | | | | | | |
| 18 | 12046365 | VALVULA REGUL 60HZ ADV | ADV 60HZ VALVE CONTROLL. | 2 | 2 | 2 | | | | | | | | |
| 19 | 12039440 | CAJA CONTROL DBC 579 | DBC CONTROL BOX 579 | 2 | 2 | 2 | | | | | | | | |
| 20 | 12045675 | TOBERA Ø 5,2 BP | NOZZLE Ø 5,2 BP | 1 | 1 | 1 | | | | | | | | |
| 20 | 12045677 | TOBERA Ø 7,5 GN | NOZZLEØ 7,5 GN | 1 | 1 | 1 | | | | | | | | |
| 21 | 12008085 | TUERCA 3/4 | NUT 3/4 | 2 | 2 | 2 | | | | | | 18.02.13 | | |
| 21 | 12048850 | TUERCA G 3/4 | NUT G 3/4 | 2 | 2 | 2 | | | | | | | 18.02.13 | |
| S/Nº | 12008775 | BICONO Ø16 | BICONE Ø16 | 2 | 2 | 2 | | | | | | | | |
| 22 | 12044366 | ENTRADA GAS CO. ACG 202 SUB | GAS INLET ACG 202 SUB | 1 | _ | _ | | | | | | | | |
| 22 | 12041051 | ENTRADA GAS CO. ADV 202 SUB | GAS INLET ADV 202 SUB | _ | 1 | 1 | | | | | | | | |
| | 12009944 | ARANDELA A5 | FLAT WASHER A.5 | 2 | 2 | 2 | | | | | | | | |
| | 12010221 | TORNILLO EXAGONAL M5X15 INOX | HEXAGONAL SCREW M5X15 INO | 2 | 2 | 2 | | | | | | | | |
| 23 | 12045675 | TOBERA Ø 5,2 BP | NOZZLE Ø 5,2 BP | 1 | 1 | 1 | | | | | | | | |
| 23 | 12039569 | TOBERA Ø7 GN | NOZZLE Ø7 GN | 1 | 1 | 1 | | | | | | | | |
| 24 | 12039559 | JUNTA AMARRE QUEMADOR 101 | BURNER TIE BOARD 101 | 2 | 2 | 2 | | | | | | | | |
| | 12009868 | ARANDELA PLANA INOX 6MM | WASHER FLAT 6 MM INOX. | 8 | 8 | 8 | | | | | | | | |
| | 12009882 | ARANDELA ABANICO A6 A.304 | FAN SHAPED WASHER A.6 | 8 | 8 | 8 | | | | | | | | |
| 25 | 12044447 | TUBO DESAGUE ADV 01 | DRAIN PIPE ADV 01 | 1 | 1 | 1 | | | | | | | | |
| 26 | 12039679 | AMARRE TUBOS AIRE | MOORING PIPES AIR | 2 | 2 | 2 | | | | | | | | |
| 26A | 11000232 | TUBO AIRE VULCANO PUZ 50 | AIR TUBE VULCANO PUZ 50 | 2 | 2 | 2 | | | | | | | | |

| MOD. | HORNOS / OVEN | ZONA / ZONE | FUNCIONAL GAS CONVECCION<br>FUNCTIONAL GAS CONVECTION | PLANO<br>DIAGRAM | C-3081 |
|---|---|---|---|---|---|

| ITEM | CODIGO REFERENCE | DENOMINACION | DENOMINATION | ACG-201 | AG-201 | APG-201 | | | | | | ELIMINADO ELIMINATED | INTRODUCID. INTRODUCED | NOTAS |
|---|---|---|---|---|---|---|---|---|---|---|---|---|---|---|
| 27 | 12039685 | DETECTOR CONVECCION 061 | CONVECTION DETECTOR 061 | 1 | 1 | 1 | | | | | | | | |
| S/Nº | 12039450 | JUNTA BUJIA CONVECCION 102 | PLUG BOARD CONVECTION 102 | 1 | 1 | 1 | | | | | | | | |
| | 12045140 | TORNILLO M4X10 LATON | SCREW M4 BRASS | 2 | 2 | 2 | | | | | | | | |
| | 12010244 | TUERCA EXAGONAL M4 LATON | HEXAGONAL NUT M4 BRASS | 2 | 2 | 2 | | | | | | | | |
| 28 | 12039684 | BUJIA CONVECCION 061 | SPARK CONVECTION 061 | 1 | 1 | 1 | | | | | | | | |
| S/Nº | 12039449 | 102 JUNTA BUJIA CONVECCION | 102 SPARK CONVECTI. BOARD | 1 | 1 | 1 | | | | | | | | |
| | 12045140 | TORNILLO M4X10 LATON | SCREW M4 BRASS | 2 | 2 | 2 | | | | | | | | |
| | 12010244 | TUERCA EXAGONAL M4 LATON | HEXAGONAL NUT M4 BRASS | 2 | 2 | 2 | | | | | | | | |
| 29 | 12039556 | QUEMADOR CONVECCION 101 | BURNER CONVECTION 101 | 1 | 1 | 1 | | | | | | | | |
| 30 | 12045252 | JUNTA ACOP.SOPLANTE GRAFITO | JOINT COU. GRAPHITE BLOWER | 1 | 1 | 1 | | | | | | | | |
| | 12009944 | ARANDELA A5 | FLAT WASHER A.5 | 4 | 4 | 4 | | | | | | | | |
| | 12009890 | ARANDELA ABANICO A5 A.304 | FAN SHAPED WASHER A.5 | 4 | 4 | 4 | | | | | | | | |
| | 12010284 | TORNILLO EXAGONAL M5 INOX. | HEXAGONAL SCREW M5 INOX. | 4 | 4 | 4 | | | | | | | | |
| 31 | 12039560 | CAMARA SILENCIADOR 101 | CHAMBER MUFFLER 101 | 1 | 1 | 1 | | | | | | | | |
| | 12010221 | TORNILLO EXAGONAL M5X15 INOX | HEXAGONAL SCREW M5X15 INO | 4 | 4 | 4 | | | | | | | | |
| 32 | 12039544 | CHISPA BRAHMA | BRAHMA SPARK | 1 | 1 | 1 | | | | | | | | |
| | 12009971 | TORNILLO ALOMADO M3X30 H.ZIN | CURVED SCREW M3X30 H.ZINC | 2 | 2 | 2 | | | | | | | | |
| | 12010289 | TUERCA AUTOBLOCANTE M3 | SELF-LOCKING NUT M3 | 2 | 2 | 2 | | | | | | | | |
| 33 | 12045252 | JUNTA ACOP.SOPLANTE GRAFITO | JOINT COU. GRAPHITE BLOWER | 1 | 1 | 1 | | | | | | | | |
| | 12009944 | ARANDELA A5 | FLAT WASHER A.5 | 4 | 4 | 4 | | | | | | | | |
| | 12009890 | ARANDELA ABANICO A5 A.304 | FAN SHAPED WASHER A.5 | 4 | 4 | 4 | | | | | | | | |
| | 12010284 | TORNILLO EXAGONAL M5 INOX. | HEXAGONAL SCREW M5 INOX. | 4 | 4 | 4 | | | | | | | | |
| 34 | 12044607 | SOPLANTE NRG 118 55kw | BLOWER NRG 118 55kw | 1 | 1 | 1 | | | | | | | | |
| 35 | 12009940 | JUNTA TORICA114x3 | O-RING 114x3 | 1 | 1 | 1 | | | | | | | | |
| 36 | 12039541 | ARO VENTURI ROJO | RED RING VENTURI | 1 | 1 | 1 | | | | | | | | |
| 37 | 12039540 | MIXER COMPLETO | MIXER COMPLETE | 1 | 1 | 1 | | | | | | | | |
| | 12009868 | ARANDELA PLANA INOX 6MM | WASHER FLAT 6 MM INOX. | 3 | 3 | 3 | | | | | | | | |
| | 12010084 | TORNILLO ALLEN INOX M6X40MM | SCREW ALLEN INOX M6X40MM | 3 | 3 | 3 | | | | | | | | |
| S/Nº | 12041612 | JUNTA TORICA 63X3 | O-RING 63X3 | 1 | 1 | 1 | | | | | | | | |
| 37A | 12039567 | TUBO GAS FLEXIBLE 300-90º | FLEXIBLE GAS PIPE 300-90º | 1 | 1 | 1 | | | | | | | | |
| | | | | | | | | | | | | | | |

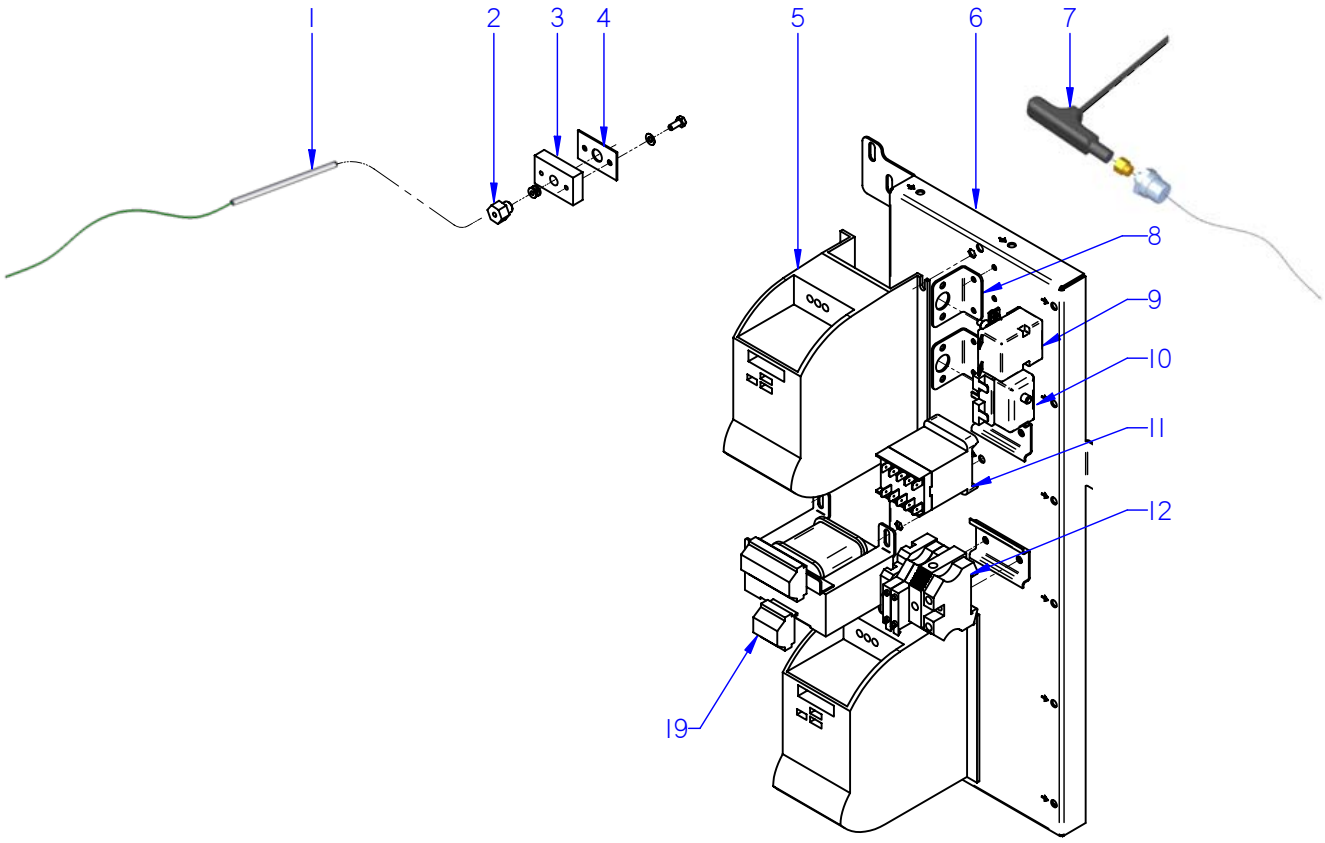


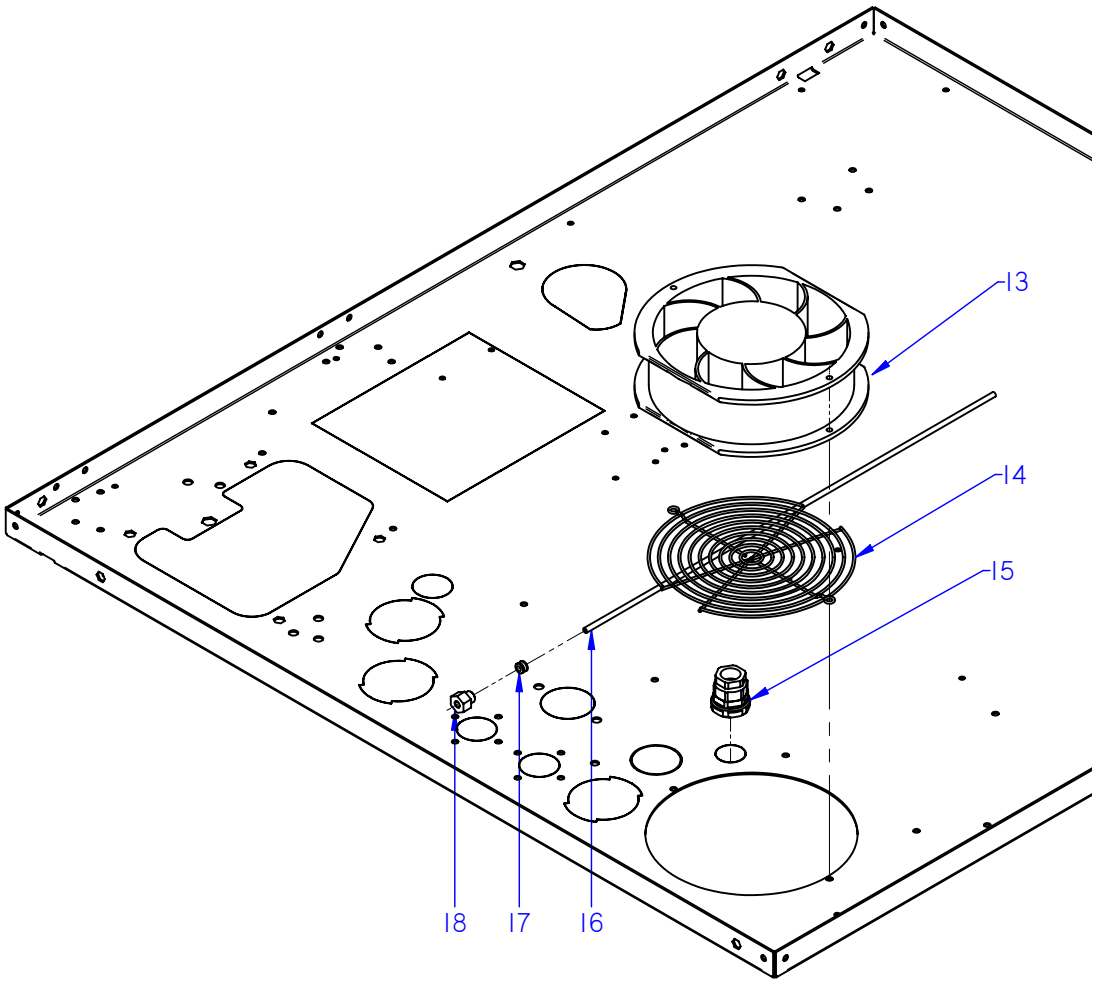


ITEM MARCADO EN COLOR = REPUESTO RECOMENDADO
COLOURED ITEM = RECOMMENDED SPARE PART

| Nº plano / N º plane | Firma | Fecha / Date | Denominación / Denomination: CUADRO ELECTRICO / ELECTRIC PANEL | Lamina / Sheet | |
|---|---|---|---|---|---|
| C-3082 | | 2012-09 | HORNOS AG; ACG; APG-201 | 11 | Fagor Industrial S.Coop. FAGOR Oñate |

| MOD. | HORNOS / OVEN | ZONA / ZONE | CUADRO ELECTRICO / ELECTRIC PANEL | PLANO DIAGRAM | C-3082 |
|---|---|---|---|---|---|

| ITEM | CODIGO REFERENCE | DENOMINACION | DENOMINATION | ACG-201 | AG-201 | APG-201 | | | | | | ELIMINADO ELIMINATED | INTRODUCID. INTRODUCED | NOTAS |
|---|---|---|---|---|---|---|---|---|---|---|---|---|---|---|
| 1 | 12024642 | CONJUN. TERMOPAR CAMARA (K) | CHAMBER THERMOCOUPLE UNI | 1 | 1 | 1 | | | | | | | | |
| 2 | 12023581 | RACORD CIERRE SONDA | PROBE CLOSING ADAPTOR | 2 | 2 | 2 | | | | | | | | |
| S/Nº | 12024247 | BICONO CIERRE SONDA | PROBE CLOSING BICONE | 1 | 1 | 1 | | | | | | | | |
| 3 | 12023737 | BASE CIERRE SONDA | FIXING CORE PROBE | 1 | 1 | 1 | | | | | | | | |
| 4 | 12023504 | JUNTA PASAMUROS SIMPLE | SIMPLE | 1 | 1 | 1 | | | | | | | | |
| | 12009987 | ARANDELA A4 | FLAT WASHER A.4 | 4 | 4 | 4 | | | | | | | | |
| | 12010249 | TORNILLO EXAGONAL M4X10 | HEXAGONAL BOLT M4X10 | 4 | 4 | 4 | | | | | | | | |
| 5 | 12024329 | VARIADOR FRECUENCIA SIE 0,37K | FREQUENCY VARIATOR SIE 0.37 | 2 | 2 | 2 | | | | | | 26.02.13 | | |
| 5 | 12048798 | REP VARIADOR REGULADO ADV | REGULATED VARIATOR ADV | 2 | 2 | 2 | | | | | | | 26.02.13 | |
| | 12009987 | ARANDELA A4 | FLAT WASHER A.4 | 8 | 8 | 8 | | | | | | | | |
| | 12009928 | ARANDELA ABANICO A4 A.304 | FAN SHAPED WASHER A.4 | 8 | 8 | 8 | | | | | | | | |
| | 12010278 | TORNILLO ALOMADO M4X10 | CURVED SCREW M.4x10 | 8 | 8 | 8 | | | | | | | | |
| S/Nº | 12024067 | CASQUILLO | BUSHING | 4 | 4 | 4 | | | | | | | 13.05.13 | |
| S/Nº | 12025235 | CONECTOR PASO 3,96MM 8 VIAS | CONNECTOR ROUTES 3,96MM 8 | 1 | 1 | 1 | | | | | | | | |
| 6 | 12039371 | CUADRO ELECT 202 G ADVAN | ELECTRICAL PANEL 202 G ADV | 1 | 1 | 1 | | | | | | | | |
| | 12010158 | REMACHE EXAGONAL M.4 | HEXAGONAL RIVET M.4 | 6 | 6 | 6 | | | | | | | | |
| | 12009944 | ARANDELA A5 | FLAT WASHER A.5 | 3 | 3 | 3 | | | | | | | | |
| | 12009890 | ARANDELA ABANICO A5 A.304 | FAN SHAPED WASHER A.5 | 3 | 3 | 3 | | | | | | | | |
| | 12010221 | TORNILLO EXAGONAL M5x15 | HEXAGONAL SCREW M.5x15 | 3 | 3 | 3 | | | | | | | | |
| 7 | 12039548 | SONDA PINCHO ADVANCE | ADVANCE PROBE PINCHO | 1 | 1 | 1 | | | | | | | | |
| | 12010110 | ARANDELA Ø 8.4X20X1.5 | FLAT WASHER Ø 8.4X20X1.5 | 1 | 1 | 1 | | | | | | | | |
| | 12040566 | CONTRATUERCA H 1/4" | COUNTERNUT H 1/4" | 1 | 1 | 1 | | | | | | | | |
| 8 | 12022001 | SOPORTE TERMOS VAPOR | THERMOSTAT SUPPORT | 2 | 2 | 2 | | | | | | | | |
| | 12023499 | TUERCA M.10x1 EGO 00.00600.075 | NUT M.10x1 EGO 00.00600.075 | 2 | 2 | 2 | | | | | | | | |
| 9 | 12024591 | TERMOSTATO LIMITADOR 10/21 | LIMITER THERMOSTAT10/21 | 1 | 1 | 1 | | | | | | | | |
| 10 | 12024884 | TERMOSTATO LIMITADOR CORTE | THERMOSTAT LIMITER | _ | 1 | 1 | | | | | | | | |
| 11 | 12024011 | CONTACTOR 230 V. 50-60 HZ | 230 V. 50-60 HZ CONTACTOR | 1 | 1 | 1 | | | | | | | | |
| 12 | 12025158 | BORNAS PORTA FUSIBLES | FUSE HOLDER TERMINAL | 2 | _ | _ | | | | | | | | |
| 12 | 12040888 | BORNAS PORTAFUSIBLES 15A 4 | FUSE HOLDER TERMINAL 15A | _ | 2 | 2 | | | | | | | | |
| | 12024743 | BORNA TIERRA 10 WPE-10103.O | EARTH TERMINAL10 WPE-10103. | 1 | 1 | 1 | | | | | | | | |
| | 12024199 | TOPE FINAL BORNA 10mm2 UL | FINAL STOP TERMINAL UL 10 | 1 | 1 | 1 | | | | | | | | |

| MOD. | HORNOS / OVEN | ZONA / ZONE | CUADRO ELECTRICO / ELECTRIC PANEL | PLANO DIAGRAM | C-3082 |
|---|---|---|---|---|---|

| ITEM | CODIGO REFERENCE | DENOMINACION | DENOMINATION | ACG-201 | AG-201 | APG-201 | | | | | | ELIMINADO ELIMINATED | INTRODUCID. INTRODUCED | NOTAS |
|---|---|---|---|---|---|---|---|---|---|---|---|---|---|---|
| 13 | 12024106 | VENTILADOR 230V AC 1N 50/60Hz 3 | FAN 230V AC 1N 50/60Hz 36KW | 2 | 2 | 2 | | | | | | | | |
| 14 | 12024790 | PROTECCI. VENTILADOR RM-155 | FAN PROTECTION RM-155 | 1 | 1 | 1 | | | | | | | | |
| | 12009882 | ARANDELA ABANICO A6 A.304 | FAN SHAPED WASHER A.6 | 1 | 1 | 1 | | | | | | | | |
| | 12009987 | ARANDELA A4 | FLAT WASHER A.4 | 6 | 6 | 6 | | | | | | | | |
| | 12009928 | ARANDELA ABANICO A4 A.304 | FAN SHAPED WASHER A.4 | 6 | 6 | 6 | | | | | | | | |
| 15 | 12009966 | PRENSA ESTOPAS | STUFFING BOX | 1 | 1 | 1 | | | | | | | | |
| | 12010121 | CONTRATUERCA (GAES)790.1300.( | COUNTERNUT (GAES) 790.1300.0 | 1 | 1 | 1 | | | | | | | | |
| | 12010046 | JUNTA GOMA (GAES) | RUBBER BOARD (GAES) | 1 | 1 | 1 | | | | | | | | |
| 16 | 12041634 | CON.TERMOPAR VAPOR KØ4-061 | STEAM THERMOCOUPLE UNIT | 1 | 1 | _ | | | | | | | | |
| 16 | 12044609 | CONJ. TERMOPAR L425 | L425 THERMOCOUPLE UNIT | _ | _ | 1 | | | | | | | | |
| 17 | 12043409 | BICONO CIERRE SONDA Ø4 | PROBE CLOSING BICONE Ø4 | 1 | 1 | 1 | | | | | | | | |
| 18 | 12041049 | RACORD CIERRE SONDA Ø 4 | PROBE CLOSING ADAPTOR Ø 4 | 1 | 1 | 1 | | | | | | | | |
| 19 | 12024173 | TRANSFORMADOR 12-0-12-0,24-0 | TRANSFORMER 12-0-12-0,24-0 | 1 | 1 | 1 | | | | | | | | |

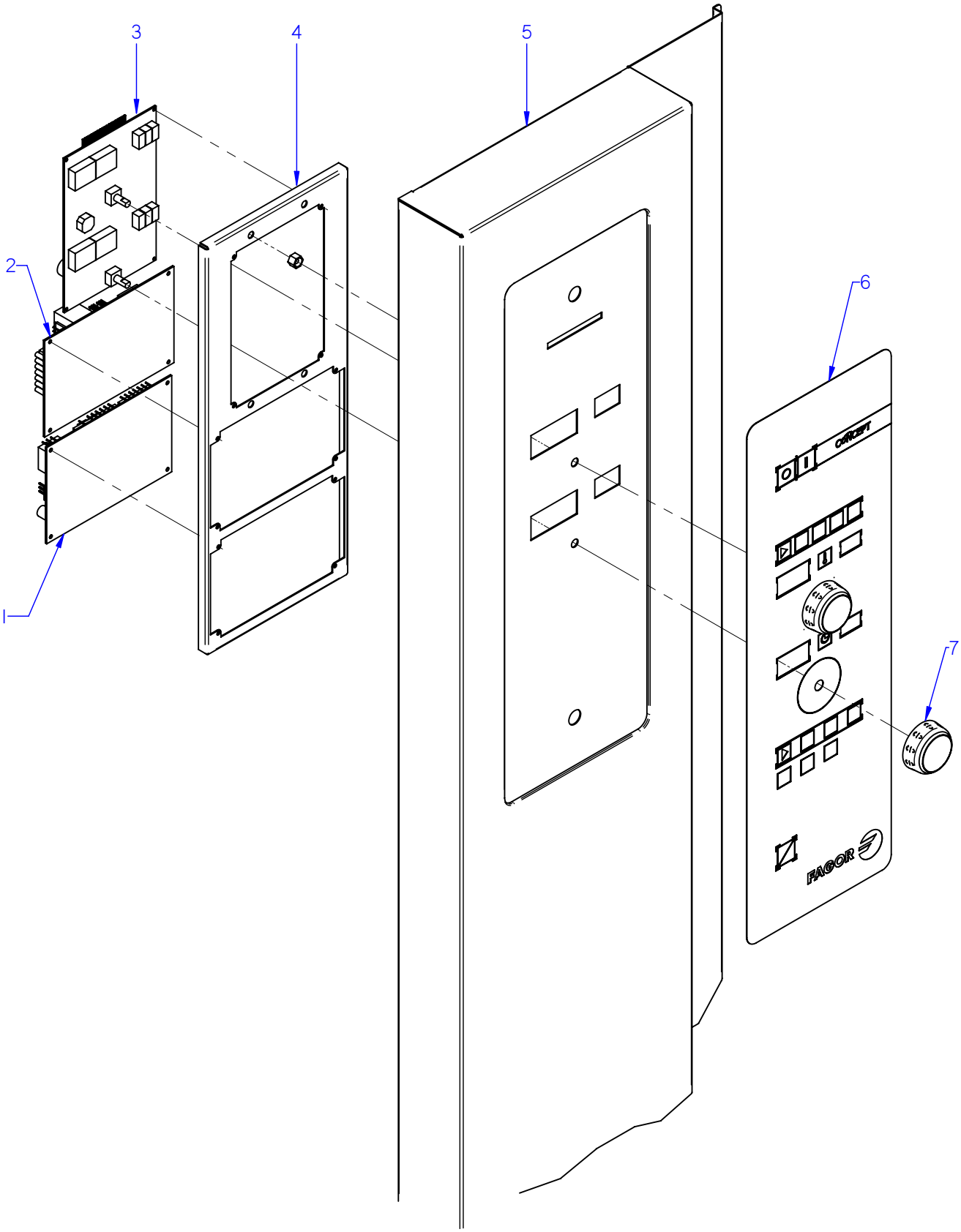


ITEM MARCADO EN COLOR = REPUESTO RECOMENDADO
COLOURED ITEM = RECOMMENDED SPARE PART

| Nº plano / N º plane | Firma | Fecha / Date | Denominación / Denomination: PORTAMANDOS / CONTROL HOLDER | Lamina / Sheet | |
|---|---|---|---|---|---|
| C-3083 | | 2012-09 | HORNOS ACG-201 | 12 | Fagor Industrial S.Coop. FAGOR Oñate |

| MOD. | HORNOS / OVEN | ZONA / ZONE | CONJUNTO ELECTRICO PORTAMANDOS / CONTROL HOLDER ELECTRIC UNIT | PLANO DIAGRAM | C-3083 |
|---|---|---|---|---|---|

| ITEM | CODIGO REFERENCE | DENOMINACION | DENOMINATION | ACG-201 | | | | | | | | ELIMINADO ELIMINATED | INTRODUCID. INTRODUCED | NOTAS |
|---|---|---|---|---|---|---|---|---|---|---|---|---|---|---|
| 1 | 12046673 | CONTROL TARJETA GAS | GAS CONTROL BOARD | 1 | | | | | | | | | | |
| 2 | 12046659 | CONTROL TARJETA CAM.12V AC . | CARD CONTROL 12V AC 50/60Hz | 1 | | | | | | | | | | |
| 3 | 12046671 | VISUALIZADOR 12V AC 50/60Hz 12D | 12V AC 50/60Hz 12D DISPLAY | 1 | | | | | | | | | | |
| 4 | 12043668 | SOPORTE PROGRA. CONCEPT AD | CIRCUIT SUPPORT CONCEPT AD | 1 | | | | | | | | | | |
| 5 | 12043998 | PANEL PORTAMANDOS ACE 201 | CONTROL PANEL ACE 201 | 1 | | | | | | | | 01.10.13 | | |
| 5 | 12095164 | PANEL PORTAMANDOS AC 201 | CONTROL PANEL AC 201 | 1 | | | | | | | | 28.03.14 | 02.10.13 | |
| 5 | 12097893 | MOD PORTAMANDO 201 ACE | CONTROL PANEL 201 ACE | 1 | | | | | | | | | 28.03.14 | |
| S/Nº | 12093219 | FRENTE PORTAM. CONCEPT | CONTROL PANEL FRONT CONC. | 1 | | | | | | | | | 01.10.13 | |
| S/Nº | 12041815 | JUNTA PORTAMANDOS ADV PLUS | CONTROL PANEL SEAL ADV PLU | 1 | | | | | | | | | 01.10.13 | |
| 6 | 12044176 | SERIGRAFIA ADV CONCEPT GAS | SERIGRAPHY ADV CONCEPT G | 1 | | | | | | | | | | |
| 7 | 12046201 | BOTON CONCEPT ADV | CONTROL BUTTON CONC. ADV | 2 | | | | | | | | | | |

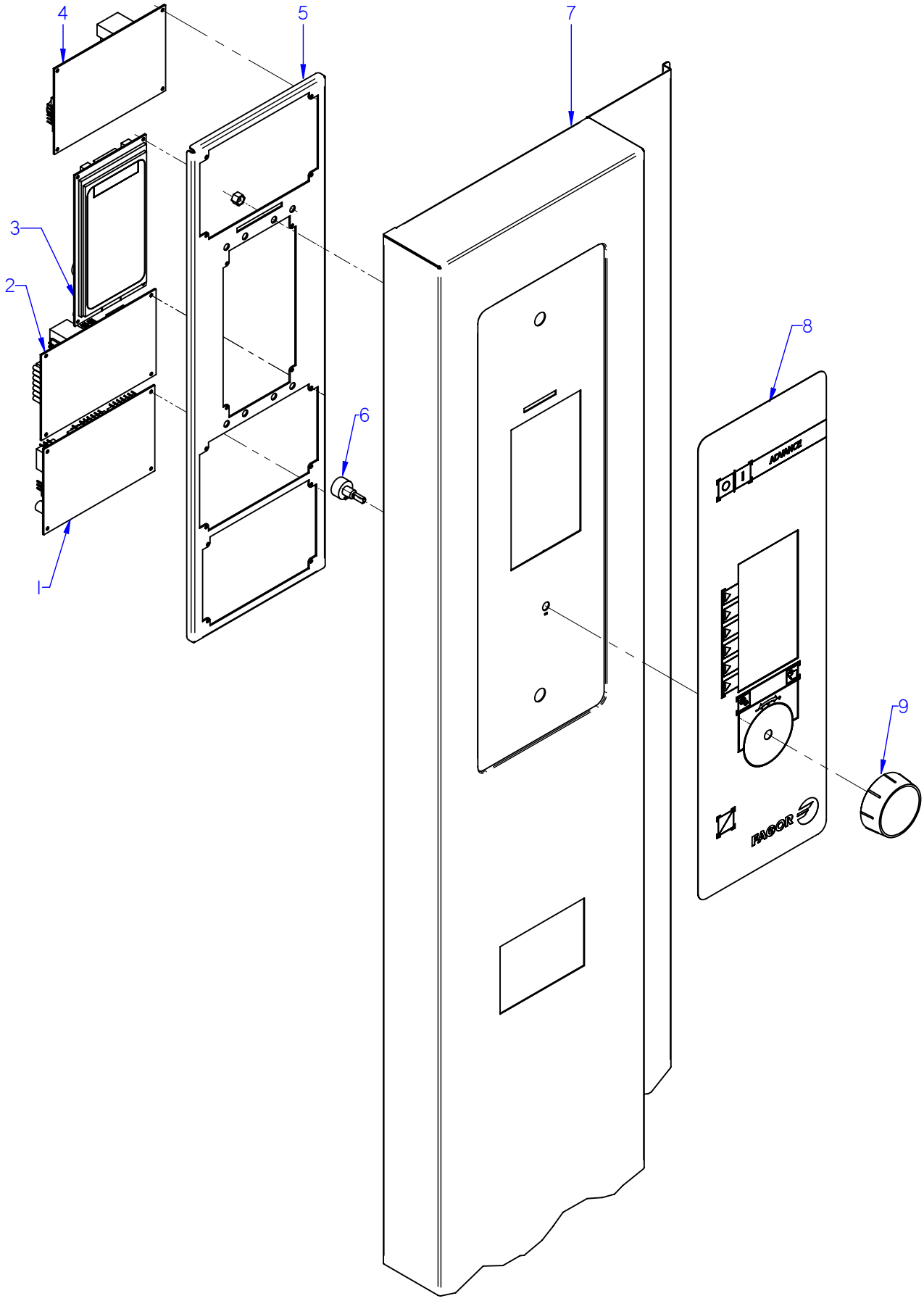


ITEM MARCADO EN COLOR = REPUESTO RECOMENDADO
COLOURED ITEM = RECOMMENDED SPARE PART

| Nº plano / N º plane | Firma | Fecha / Date | Denominación / Denomination: PORTAMANDOS / CONTROL HOLDER | Lamina / Sheet | |
|---|---|---|---|---|---|
| C-3084 | | 2012-09 | HORNOS AG-201 | 13 | Fagor Industrial S.Coop. Oñate FAGOR |

| MOD. | HORNOS / OVEN | ZONA / ZONE | CONJUNTO ELECTRICO PORTAMANDOS / CONTROL HOLDER ELECTRIC UNIT | PLANO DIAGRAM | C-3084 |
|---|---|---|---|---|---|

| ITEM | CODIGO REFERENCE | DENOMINACION | DENOMINATION | AG-201 | | | | | | | | ELIMINADO ELIMINATED | INTRODUCID. INTRODUCED | NOTAS |
|---|---|---|---|---|---|---|---|---|---|---|---|---|---|---|
| 1 | 12046673 | CONTROL TARJETA GAS | GAS CONTROL BOARD | 1 | | | | | | | | | | |
| 2 | 12046659 | CONTROL TARJETA CAM.12V AC . | CARD CONTROL 12V AC 50/60Hz | 1 | | | | | | | | | | |
| 3 | 12046672 | VISUALIZADOR 12V AC 50/60Hz 32 | 12V AC 50/60Hz 32 D DISPLAY | 1 | | | | | | | | | | |
| 4 | 12046670 | CONTROL TARJETA CALD. 12V AC | CARD CONTROL 12V AC 50/60Hz | 1 | | | | | | | | | | |
| 5 | 12039536 | SOPORTE CIRCUITOS ADVANCE | CIRCUIT SUPPORT ADVANCE | 1 | | | | | | | | | | |
| | 12009944 | ARANDELA A5 | FLAT WASHER A.5 | 4 | | | | | | | | | | |
| | 12010281 | TUERCA EXAGONAL AUT M5 H. ZI. | HEXAGONAL NUT M5 H. ZINC, | 4 | | | | | | | | | | |
| 6 | 12043405 | ENCODER GAMA ADVANCE | ADVANCE RANGE ENCODER | 1 | | | | | | | | | | |
| 7 | 12041099 | PANEL PORTAMANDOS AE 201 | CONTROL PANEL AE 201 | 1 | | | | | | | | 01.10.13 | | |
| 7 | 12043844 | PANEL PORTAMANDOS APE 201 | CONTROL PANEL APE 201 | 1 | | | | | | | | 28.03.14 | 01.10.13 | |
| 7 | 12097708 | MOD PORTAMAN. 201 ADV- PLUS | CONTROL PANEL 201 ADV- PLU | 1 | | | | | | | | | 28.03.14 | |
| S/Nº | 12093236 | FRENTE PORTAM. AE-AG COMP. | CONTROL PANEL FRONT AE-AG | 1 | | | | | | | | | 01.10.13 | |
| S/Nº | 12041815 | JUNTA PORTAMANDOS ADV PLUS | CONTROL PANEL SEAL ADV PLU | 1 | | | | | | | | | 01.10.13 | |
| 8 | 12044139 | SERIGRAFIA ADVANCE | ADVANCE SERIGRAPHY | 1 | | | | | | | | | | |
| 9 | 12044074 | BOTON DE MANDO ADV | ADV CONTROL BUTTON | 1 | | | | | | | | | | |

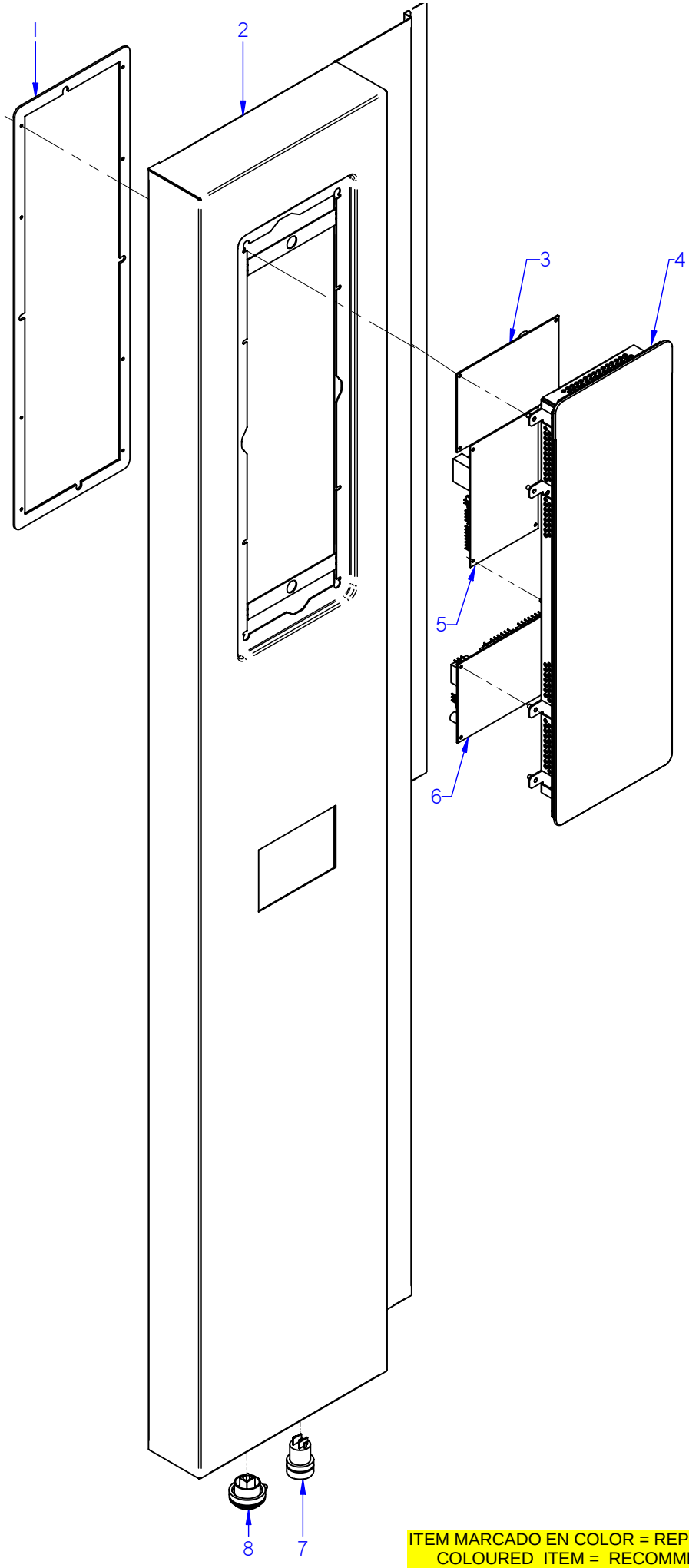


ITEM MARCADO EN COLOR = REPUESTO RECOMENDADO
COLOURED ITEM = RECOMMENDED SPARE PART

| Nº plano / N º plane | Firma | Fecha / Date | Denominación / Denomination: PORTAMANDOS / CONTROL HOLDER | Lamina / Sheet | |
|---|---|---|---|---|---|
| C-3085 | | 2012-09 | HORNOS APG-201 | 14 | Fagor Industrial S.Coop. FAGOR Oñate |

| MOD. | HORNOS / OVEN | ZONA / ZONE | CONJUNTO ELECTRICO PORTAMANDOS / CONTROL HOLDER ELECTRIC UNIT | PLANO DIAGRAM | C-3085 |
|---|---|---|---|---|---|

| ITEM | CODIGO REFERENCE | DENOMINACION | DENOMINATION | APG-201 | | | | | | | | ELIMINADO ELIMINATED | INTRODUCID. INTRODUCED | NOTAS |
|---|---|---|---|---|---|---|---|---|---|---|---|---|---|---|
| 1 | 12041815 | JUNTA PORTAMANDOS ADV PLUS | CONTROL PANEL SEAL ADV PLU | 1 | | | | | | | | | | |
| | 12010289 | TUERCA AUTOB. M3 DIN985 | SELF-LOCK NUT M3 DIN985 | 6 | | | | | | | | | | |
| | 12010288 | CLIP SUJECIÓN RÁPIDA Ø 4 | RAPID CONNECT CLIP Ø 4 | 12 | | | | | | | | | | |
| 2 | 12043844 | PANEL PORTAMANDOS APE 201 | CONTROL PANEL APE 201 | 1 | | | | | | | | 28.03.14 | | |
| 2 | 12097708 | MOD PORTAMAN. 201 ADV- PLUS | CONTROL PANEL 201 ADV- PLU | 1 | | | | | | | | | 28.03.14 | |
| 3 | 12046670 | CONTROL TARJETA CALD. 12V AC | CARD CONTROL 12V AC 50/60Hz | 1 | | | | | | | | | | |
| 4 | 12046579 | PLAT ADV PLUS CON SOFTWARE | ADV PLUS SOFTWARE PLATF. | 1 | | | | | | | | | | |
| 5 | 12046659 | CONTROL TARJETA CAM.12V AC . | CARD CONTROL 12V AC 50/60Hz | 1 | | | | | | | | | | |
| 6 | 12046673 | CONTROL TARJETA GAS | GAS CONTROL BOARD | 1 | | | | | | | | | | |
| 7 | 12023927 | PULSADOR SERIE MICRO | MICRO SWITCH SERIES | 1 | | | | | | | | | | |
| 8 | 12024064 | CONECTOR USB VISUAL PLUS | VISUAL PLUS USB CONNECTOR | 1 | | | | | | | | | | |
| S/Nº | 12023647 | TAPA USB VISUAL PLUS | VISUAL PLUS USB COVER | 1 | | | | | | | | | | |

| MOD. | HORNOS / OVEN | ZONA / ZONE | VARIOS / MISCELLANEOUS | PLANO DIAGRAM | |
|---|---|---|---|---|---|

| ITEM | CODIGO REFERENCE | DENOMINACION | DENOMINATION | ACG-201 | AG-201 | APG-201 | | | | | | ELIMINADO ELIMINATED | INTRODUCID. INTRODUCED | NOTAS |
|---|---|---|---|---|---|---|---|---|---|---|---|---|---|---|
| | 12045296 | MANUAL DE USUARIO ADV CONCE | USER MANUAL ADV CONCEPT | 1 | _ | _ | | | | | | | | |
| | 12044972 | MANUAL INSTAL. CONCEPT GAS | INSTALLATI. MANUA CONC. GAS | 1 | _ | _ | | | | | | | | |
| | 12045298 | MANUAL DE USUARIO ADVANCE | USER MANUAL ADVANCE | _ | 1 | _ | | | | | | | | |
| | 12044973 | MANUAL NSTALACION ADV GAS | INSTALLATI. MANUAL ADV GAS | _ | 1 | _ | | | | | | | | |
| | 12045299 | MANUAL DE USUARIO ADV PLUS | USER MANUAL ADV PLUS | _ | _ | 1 | | | | | | | | |
| | 12044974 | MANUAL INSTAL. ADV PLUS GAS | INST. MANUAL ADV PLUS GAS | _ | _ | 1 | | | | | | | | |
| | 12039676 | ESQUE. TEORICO ACG, AG, APG | THEO. DIAGRAM ACG, AG, APG | 1 | 1 | 1 | | | | | | | | |
| | 12039293 | PLANO MONTAJE ACG, AG, APG | ASSEMBLY PLAN ACG, AG, APG | 1 | 1 | 1 | | | | | | | | |
| | 12044393 | INSTAL. ELECTRICA ACG 201, 202 | ELEC. INSTALL. ACG 201, 202 | 1 | _ | _ | | | | | | | | |
| | 12039472 | INSTAL.ELECTRICA. APG 202, 201 | ELEC. INSTA. APG 202, 201 | _ | 1 | 1 | | | | | | | | |
| | 12024575 | CABLEADO LUZ INTERIOR 20-21 | INTERIOR LIGHT WIRING 20-21 | 1 | 1 | 1 | | | | | | | | |
| | 12023696 | CABLEADO BMF | WIRING BMF | 1 | 1 | 1 | | | | | | | | |
| | 12024453 | CABL. DETEC-LLAMA-CAM. 20-21 | FLAME DETECT. CAMERA WIR. 2 | 1 | 1 | 1 | | | | | | | | |
| | 12024399 | CABL. DETEC-LLAMA-CAM. 10-21 | FLAME DETECT. CAMERA WIR. 2 | 1 | 1 | 1 | | | | | | | | |
| | 12008032 | CABLEADO TIERRA CG9-41 | EARTH WIRING CG9-41 | 1 | 1 | 1 | | | | | | | | |
| | 12008929 | CABLEADO VAR-SOPL HGC-20-21 | BLOWER DRIVE WIR. HGC-20-21 | 1 | 1 | 1 | | | | | | | | |
| | 12024655 | CABLEADO VAR-SOPL HGV20-21 | BLOWER DRIVE WIR. HGV20-21 | 1 | 1 | 1 | | | | | | | | |
| | 12040567 | CABLEADO LAVADO 201-102-202 | WIRING CABLE 201-102-202 | _ | _ | 1 | | | | | | | | |
| | 12008976 | CABLEADO PULSADOR RESET | RESET BUTTON WIRING | _ | _ | 1 | | | | | | | | |
| | 12023775 | CABLE USB VISUAL PLUS 1,5M | VISUAL PLUS USB CABLE 1,5M | _ | _ | 1 | | | | | | | | |
| | 12009277 | CD HACCP VISUAL COMPLETO | HACCP CD COMPLETE VISUAL | _ | _ | 1 | | | | | | | | |
| | 12009257 | CABLEA. TRANSFORMADOR TFT | WIRING TRANSFORMER TFT | _ | _ | 1 | | | | | | | | |
| | 12022177 | LEYENDA HORNOS | LEGEND OVENS | 1 | 1 | 1 | | | | | | | | |
| | | | | | | | | | | | | | | |
| | | | | | | | | | | | | | | |
| | | | | | | | | | | | | | | |
| | | | | | | | | | | | | | | |
| | | | | | | | | | | | | | | |
| | | | | | | | | | | | | | | |
| | | | | | | | | | | | | | | |
| | | | | | | | | | | | | | | |

| MOD. | HORNOS / OVEN | ZONA / ZONE | REPUESTOS RECOMENDADOS<br>RECOMMENDED SPARE PART | PLANO<br>DIAGRAM | |
|---|---|---|---|---|---|

| ITEM | CODIGO REFERENCE | DENOMINACION | DENOMINATION | ACG-201 | AG-201 | APG-201 | | | | | | ELIMINADO ELIMINATED | INTRODUCID. INTRODUCED | NOTAS |
|---|---|---|---|---|---|---|---|---|---|---|---|---|---|---|
| | **12046022** | **KIT PUERTA 201** | **DOOR 201 KIT** | **1** | **1** | **1** | | | | | | 12,03,14 | | C-3073 |
| **23** | **12097686** | **KIT PUERTA 201 CIERRE UNICO** | **SINGLE LOCK DOOR 201 KIT** | **1** | **1** | **1** | | | | | | | 12,03,14 | C-3073-14 |
| **1** | **12041083** | **KIT CRISTAL INTER. 201** | **201 INNER GLASS KIT** | **1** | **1** | **1** | | | | | | | | C-3073-14 |
| 8 | 12039312 | BISAGRA SUPERIOR | UPPER HINGE | 1 | 1 | 1 | | | | | | | | C-3073-14 |
| 13 | 12047967 | BASE BISAGRA INFERIOR 6 DIEN | LOWER HINGE BASE | 1 | 1 | 1 | | | | | | | | C-3073-14 |
| 12 | 12044776 | ASA COMPLETA 2/1 ADVANCE | HANDLE 2/1 ADVANCE | 1 | 1 | 1 | | | | | | 12,03,14 | | C-3073 |
| 12 | 12044773 | ASA ADVANCE | ADVANCE HANDLE | 1 | 1 | 1 | | | | | | | 12,03,14 | C-3073-14 |
| 13 | 12039311 | BASE BISAGRA INFERIOR PUERTA | LOWER DOOR HINGE BASE | 1 | 1 | 1 | | | | | | 02.09.13 | | C-3073 |
| 13 | 12047967 | BASE BISAGRA INFERIOR 6 DIEN | LOWER HINGE BASE | 1 | 1 | 1 | | | | | | | 02.09.13 | C-3073-14 |
| 16 | 12024560 | INTERRUPTOR MAGNETICO AC | MAGNETIC SWITCH AC | 1 | 1 | 1 | | | | | | | | C-3073-14 |
| 21 | 12041134 | JUNTA PUERTA COMPL.201 ADV | DOOR JOINT 201 ADV | 1 | 1 | 1 | | | | | | | | C-3073-14 |
| 22 | 12041088 | JUNTA CIERRE INFERIOR 201 | LOWER LOCK JOINT 201 | 1 | 1 | 1 | | | | | | | | C-3073-14 |
| 6 | 12024464 | MARCO LAMPARA | LAMP ANCHORING PLATEN | 2 | 2 | 2 | | | | | | | | C-3074 |
| S/Nº | 12023532 | JUNTA INTERIOR LAMPARA | LAMP INNER JOINT | 2 | 2 | 2 | | | | | | | | C-3074 |
| S/Nº | 12023668 | CRISTAL LAMPARA | LAMP GLASS | 2 | 2 | 2 | | | | | | | | C-3074 |
| S/Nº | 12023578 | JUNTA EXTERIOR LAMPARA | LAMP OUTER JOINT | 2 | 2 | 2 | | | | | | | | C-3074 |
| S/Nº | 12024545 | PORTALAMPARAS | LAMP HOLDER | 2 | 2 | 2 | | | | | | | | C-3074 |
| S/Nº | 12025123 | LAMPARA 10W-12V | LIGHT 10W 12V | 2 | 2 | 2 | | | | | | | | C-3074 |
| 1 | 12024325 | MOTOR 230V AC 3N650KW 1450RP | MOTOR 230V AC 3N650KW 1450 | 2 | 2 | 2 | | | | | | | | C-3076 |
| 4 | 12024510 | RETEN 17X28X7V | RETAINER 28x17x7 | 4 | 4 | 4 | | | | | | | | C-3076 |
| 5 | 12010122 | ANILLO DE SEGURIDAD Ø 28X1.2 | SAFETY RING 28x1,2 | 2 | 2 | 2 | | | | | | | | C-3076 |
| 11 | 12025193 | INTERRUPTOR PUERTA | DOOR SWITCH | 2 | 2 | 2 | | | | | | | | C-3077 |
| 12 | 12024638 | MOTOR CHIMENEA | FLUEPIPE MOTOR | 1 | 1 | 1 | | | | | | | | C-3077 |
| 14 | 12024122 | TUBO FLEXIBLE Ø53X360 | FLEXIBLE TUBE Ø53X360 | 1 | 1 | 1 | | | | | | | | C-3077 |
| 1 | 12025161 | ELECTRO. 230VAC 50/60Hz 1VIA | SOLENOID VALVE 230VAC 1 V | 1 | _ | _ | | | | | | | | C-3078 |
| 1 | 12023921 | ELECTR. 230V AC 50/60Hz 3 VIAS A | SOLENOID 230V AC 50/60Hz 3 V | _ | 1 | 1 | | | | | | | | C-3078 |
| 8 | 12039546 | MOTOBOMBA 230V AC 1N 50/60Hz | PUMP 230V AC 50/60Hz 30W 1N | _ | 1 | 1 | | | | | | | | C-3078 |
| 10 | 12024800 | DUCHA | SHOWER | _ | 1 | 1 | | | | | | | | C-3078 |
| | | | | | | | | | | | | | | |
| | | | | | | | | | | | | | | |
| | | | | | | | | | | | | | | |

| MOD. | HORNOS / OVEN | ZONA / ZONE | REPUESTOS RECOMENDADOS<br>RECOMMENDED SPARE PART | PLANO<br>DIAGRAM | |
|---|---|---|---|---|---|

| ITEM | CODIGO REFERENCE | DENOMINACION | DENOMINATION | ACG-201 | AG-201 | APG-201 | | | | | | ELIMINADO ELIMINATED | INTRODUCID. INTRODUCED | NOTAS |
|---|---|---|---|---|---|---|---|---|---|---|---|---|---|---|
| 11 | 12025161 | ELECTROVALV. 230VAC 50/60Hz 1V | SOLENOID VALVE 230VAC 1 V | _ | 1 | 1 | | | | | | | | C-3078 |
| 13 | 12024754 | MOTORREDUCTOR 230V AC 1N | MOTOREDUCER 230V AC 1N | _ | _ | 1 | | | | | | | | C-3078 |
| 17 | 12025193 | INTERRUPTOR PUERTA | DOOR SWITCH | _ | _ | 2 | | | | | | | | C-3078 |
| 20 | 12024796 | CUERPO VALVULA COMPLETO | COMPLETE VALVE BODY | _ | _ | 1 | | | | | | | | C-3078 |
| 21 | 12024407 | GOMA VALVULA BOMBA GAS | PUMP VALVE RUBBER | _ | _ | 1 | | | | | | | | C-3078 |
| 22 | 12024782 | MOTOBOMBA 230V AC 1N 50Hz | MOTOR 230V AC 1N 50Hz 74,6 | _ | _ | 1 | | | | | | | | C-3078 |
| 23 | 12047404 | MOD CONJUNTO DESAGUE ADV | ADV DRAIN SET MODEL | _ | 1 | 1 | | | | | | | 03,12,12 | C-3078 |
| **1** | **12046107** | **KIT GENERADOR VAPOR 201** | **STEAM GENERATOR 201 KIT** | _ | **1** | **1** | | | | | | | | C-3079 |
| 2 | 12041855 | TUBO FLEXIBLE Ø53X360 VARILLA | FLEXIBLE TUBE Ø53X360 | _ | 1 | 1 | | | | | | 01.01.13 | | C-3079 |
| 2 | 12047890 | EMPALME GENERADOR AG 201 | GENERATOR JOINT AG 201 | _ | 1 | 1 | | | | | | | 01.01.13 | C-3079 |
| S/Nº | 12047901 | EMPALME SILICONA Ø53 | SILICONE JOINT Ø53 | _ | 2 | 2 | | | | | | | 01.01.13 | C-3079 |
| 3 | 12023573 | ELECTRODO ALTO | HIGH LEVEL ELECTRODE | _ | 1 | 1 | | | | | | | | C-3079 |
| 4 | 12023574 | ELECTRODO BAJO | LOW LEVEL ELECTRODE | _ | 1 | 1 | | | | | | | | C-3079 |
| 5 | 12023575 | ELECTRODO DE MASA | EARTH ELECTRODE | _ | 1 | 1 | | | | | | | | C-3079 |
| 9 | 12023921 | ELECTR. 230V AC 50/60Hz 3 VIAS A | SOLENOID 230V AC 50/60Hz 3 V | _ | 1 | 1 | | | | | | | | C-3079 |
| 10 | 12039649 | TUBO DESAGÜE GENERADOR | DRAIN TUBE GENERATOR | _ | 1 | 1 | | | | | | | | C-3079 |
| 11 | 12039546 | MOTOBOMBA 230V AC 1N 50/60Hz | PUMP 230V AC 50/60Hz 30W 1N | _ | 1 | 1 | | | | | | | | C-3079 |
| 12 | 12023901 | CONJUN. TERMOPAR VAPOR | STEAM THERMOCOUPLE UNIT | _ | 1 | 1 | | | | | | | | C-3079 |
| 1 | 12039544 | CHISPA BRAHMA | BRAHMA SPARK | _ | 1 | 1 | | | | | | | | C-3080 |
| 2 | 12044424 | QUEMADOR GENERADOR 201G | BURNER GENERATOR 201G | _ | 1 | 1 | | | | | | | | C-3080 |
| 4 | 12044607 | SOPLANTE NRG 118 55kw | BLOWER NRG 118 55kw | _ | 1 | 1 | | | | | | | | C-3080 |
| 8 | 12039440 | CAJA CONTROL DBC 579 | DBC CONTROL BOX 579 | _ | 1 | 1 | | | | | | | | C-3080 |
| 9 | 12046364 | VALVULA REGUL 50HZ ADV | ADV 50HZ VALVE CONTROLL. | _ | 1 | 1 | | | | | | | | C-3080 |
| 9 | 12046365 | VALVULA REGUL 60HZ ADV | ADV 60HZ VALVE CONTROLL. | _ | 1 | 1 | | | | | | | | C-3080 |
| 15 | 12039430 | BUJIA GENERADOR 202 | PLUG GENERATOR 202 | _ | 1 | 1 | | | | | | | | C-3080 |
| 16 | 12039431 | DETECTOR GENERADOR 202 | GENERATOR SENSOR 202 | _ | 1 | 1 | | | | | | | | C-3080 |
| 1 | 12039685 | DETECTOR CONVECCION 061 | CONVECTION DETECTOR 061 | 1 | 1 | 1 | | | | | | | | C-3081 |
| 2 | 12039684 | BUJIA CONVECCION 061 | SPARK CONVECTION 061 | 1 | 1 | 1 | | | | | | | | C-3081 |
| 8 | 12044607 | SOPLANTE NRG 118 55kw | BLOWER NRG 118 55kw | 1 | 1 | 1 | | | | | | | | C-3081 |
| 12 | 12039556 | QUEMADOR CONVECCION 101 | BURNER CONVECTION 101 | 1 | 1 | 1 | | | | | | | | C-3081 |
| 18 | 12046364 | VALVULA REGUL 50HZ ADV | ADV 50HZ VALVE CONTROLL. | 2 | 2 | 2 | | | | | | | | C-3081 |

| MOD. | HORNOS / OVEN | ZONA / ZONE | REPUESTOS RECOMENDADOS<br>RECOMMENDED SPARE PART | PLANO<br>DIAGRAM | |
|---|---|---|---|---|---|

| ITEM | CODIGO REFERENCE | DENOMINACION | DENOMINATION | ACG-201 | AG-201 | APG-201 | | | | | | ELIMINADO ELIMINATED | INTRODUCID. INTRODUCED | NOTAS |
|---|---|---|---|---|---|---|---|---|---|---|---|---|---|---|
| 18 | 12046365 | VALVULA REGUL 60HZ ADV | ADV 60HZ VALVE CONTROLL. | 2 | 2 | 2 | | | | | | | | C-3081 |
| 19 | 12039440 | CAJA CONTROL DBC 579 | DBC CONTROL BOX 579 | 2 | 2 | 2 | | | | | | | | C-3081 |
| 27 | 12039685 | DETECTOR CONVECCION 061 | CONVECTION DETECTOR 061 | 1 | 1 | 1 | | | | | | | | C-3081 |
| 28 | 12039684 | BUJIA CONVECCION 061 | SPARK CONVECTION 061 | 1 | 1 | 1 | | | | | | | | C-3081 |
| 29 | 12039556 | QUEMADOR CONVECCION 101 | BURNER CONVECTION 101 | 1 | 1 | 1 | | | | | | | | C-3081 |
| 34 | 12044607 | SOPLANTE NRG 118 55kw | BLOWER NRG 118 55kw | 1 | 1 | 1 | | | | | | | | C-3081 |
| 1 | 12024642 | CONJUN. TERMOPAR CAMARA (K) | CHAMBER THERMOCOUPLE UNI | 1 | 1 | 1 | | | | | | | | C-3082 |
| 5 | 12048798 | REP VARIADOR REGULADO ADV | REGULATED VARIATOR ADV | 2 | 2 | 2 | | | | | | | | C-3082 |
| 7 | 12039548 | SONDA PINCHO ADVANCE | ADVANCE PROBE PINCHO | 1 | 1 | 1 | | | | | | | | C-3082 |
| 9 | 12024591 | TERMOSTATO LIMITADOR 10/21 | LIMITER THERMOSTAT10/21 | 1 | 1 | 1 | | | | | | | | C-3082 |
| 10 | 12024884 | TERMOSTATO LIMITADOR CORTE | THERMOSTAT LIMITER | _ | 1 | 1 | | | | | | | | C-3082 |
| 13 | 12024106 | VENTILADOR 230V AC 1N 50/60Hz 3 | FAN 230V AC 1N 50/60Hz 36KW | 2 | 2 | 2 | | | | | | | | C-3082 |
| 16 | 12041634 | CON.TERMOPAR VAPOR KØ4-061 | STEAM THERMOCOUPLE UNIT | 1 | 1 | _ | | | | | | | | C-3082 |
| 16 | 12044609 | CONJ. TERMOPAR L425 | L425 THERMOCOUPLE UNIT | _ | _ | 1 | | | | | | | | C-3082 |
| 17 | 12043409 | BICONO CIERRE SONDA Ø4 | PROBE CLOSING BICONE Ø4 | 1 | 1 | 1 | | | | | | | | C-3082 |
| 19 | 12024173 | TRANSFORMADOR 12-0-12-0,24-0 | TRANSFORMER 12-0-12-0,24-0 | 1 | 1 | 1 | | | | | | | | C-3082 |
| 1 | 12046673 | CONTROL TARJETA GAS | GAS CONTROL BOARD | 1 | _ | _ | | | | | | | | C-3083 |
| 2 | 12046659 | CONTROL TARJETA CAM.12V AC . | CARD CONTROL 12V AC 50/60Hz | 1 | _ | _ | | | | | | | | C-3083 |
| 3 | 12046671 | VISUALIZADOR 12V AC 50/60Hz 12D | 12V AC 50/60Hz 12D DISPLAY | 1 | _ | _ | | | | | | | | C-3083 |
| 6 | 12044176 | SERIGRAFIA ADV CONCEPT GAS | SERIGRAPHY ADV CONCEPT G | 1 | _ | _ | | | | | | | | C-3083 |
| 1 | 12046673 | CONTROL TARJETA GAS | GAS CONTROL BOARD | _ | 1 | _ | | | | | | | | C-3084 |
| 2 | 12046659 | CONTROL TARJETA CAM.12V AC . | CARD CONTROL 12V AC 50/60Hz | _ | 1 | _ | | | | | | | | C-3084 |
| 3 | 12046672 | VISUALIZADOR 12V AC 50/60Hz 32 | 12V AC 50/60Hz 32 D DISPLAY | _ | 1 | _ | | | | | | | | C-3084 |
| 4 | 12046670 | CONTROL TARJETA CALD. 12V AC | CARD CONTROL 12V AC 50/60Hz | _ | 1 | _ | | | | | | | | C-3084 |
| 6 | 12043405 | ENCODER GAMA ADVANCE | ADVANCE RANGE ENCODER | _ | 1 | _ | | | | | | | | C-3084 |
| 8 | 12044139 | SERIGRAFIA ADVANCE | ADVANCE SERIGRAPHY | _ | 1 | _ | | | | | | | | C-3084 |
| 1 | 12041815 | JUNTA PORTAMANDOS ADV PLUS | CONTROL PANEL SEAL ADV PLU | _ | _ | 1 | | | | | | | | C-3085 |
| 3 | 12046670 | CONTROL TARJETA CALD. 12V AC | CARD CONTROL 12V AC 50/60Hz | _ | _ | 1 | | | | | | | | C-3085 |
| 4 | 12046579 | PLAT ADV PLUS CON SOFTWARE | ADV PLUS SOFTWARE PLATF. | _ | _ | 1 | | | | | | | | C-3085 |
| 5 | 12046659 | CONTROL TARJETA CAM.12V AC . | CARD CONTROL 12V AC 50/60Hz | _ | _ | 1 | | | | | | | | C-3085 |
| 6 | 12046673 | CONTROL TARJETA GAS | GAS CONTROL BOARD | _ | _ | 1 | | | | | | | | C-3085 |

| MOD. | HORNOS / OVEN | ZONA / ZONE | REPUESTOS RECOMENDADOS<br>RECOMMENDED SPARE PART | PLANO<br>DIAGRAM | |
|---|---|---|---|---|---|

| ITEM | CODIGO REFERENCE | DENOMINACION | DENOMINATION | ACG-201 | AG-201 | APG-201 | | | | | | ELIMINADO ELIMINATED | INTRODUCID. INTRODUCED | NOTAS |
|---|---|---|---|---|---|---|---|---|---|---|---|---|---|---|
| 7 | 12023927 | PULSADOR SERIE MICRO | MICRO SWITCH SERIES | _ | _ | 1 | | | | | | | | C-3085 |
| 8 | 12024064 | CONECTOR USB VISUAL PLUS | VISUAL PLUS USB CONNECTOR | _ | _ | 1 | | | | | | | | C-3085 |
| S/Nº | 12023647 | TAPA USB VISUAL PLUS | VISUAL PLUS USB COVER | _ | _ | 1 | | | | | | | | C-3085 |
| 8 | 12039312 | BISAGRA SUPERIOR | UPPER HINGE | 1 | 1 | 1 | | | | | | | | C-3073 |

SIT

APG 06 1, APG 10 1, APG 20 1,
APG 10 2, APG 20 2

AG 06 1, AG 10 1, AG 20 1,
AG 10 2, AG 20 2

ACG 06 1, ACG 10 1, ACG 20 1,
ACG 10 2, ACG 20 2

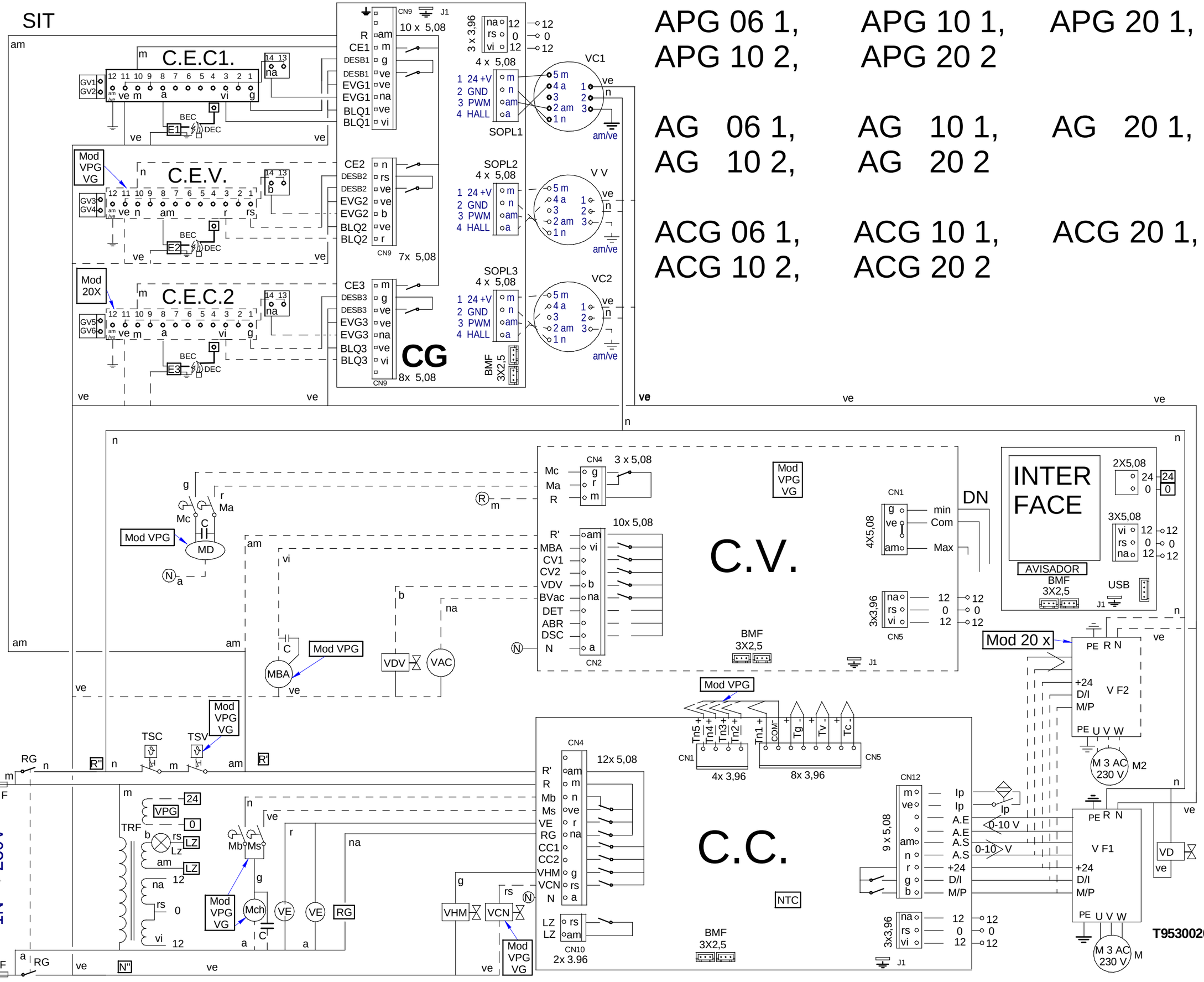

**Variador de Siemens.**
**Pulsar [P] paraentrar o salir de los Parmetros.**
**Nota. Si se modifica algunvalor del nivel Basico, hay que volver a grabar el nivel 3.**

P0010 = 1 Para inicio programación. (Nivel Basico)
P0100 = 0 ( Valor en KW 50Hz Europa)
P0304 = 230 (Vn V)
P0305 = 1,8 (Inb A)
P0307 = 0,37 (Pn KW)
P0310 = 50 (Fn Hz)
P0311 = 1400 (rpm Nom)
P0700 = 2 (Terminal)
P1000 = 2 (Consigna ADC)
P1080 = 25 (F.min Hz)
P1082 = 50 (F.Max Hz)
P1120 = 5" (Ton ")
P1121 = 5" (Toff ")
P3900 = 1 (Fin de la programación y grabación de datos.)
**P0003 =3 (Nivel 3 Experto).**
P0005 = 27 (Visualizacion = Corriente de salida)
P0611 = 16000 (Tiempo de activación de sobrecarga Seg.)
P0640 = 150 (Sobrecarga de corriente en %)
P1210 = 6 (Rearranque automático)
P1300 = 2 (Modo Parábola, Ventilador)
P1800 = 16 (F.Base KHz) (Cuanto mas alto: - ruido acústico )
P2000 = 50 (F.Refencia de la consigna Hz)

COPIAR PARAMETROS DESDE EL BOP AL VARIADOR

P0003 = 3
P0010= 30
P0803 = 1

SOLO USAR CUANDO EL BOP SE HA BORRADO

P0802 desde Variador a BOP

| | | 10 2 | 20 2 |
|---|---|---|---|
| | | VG | VPG | VG |
| Genrl | 1 | T643007000 | |
| Soplt | 2 | T303058 | T493011 |
| Ig.C | 3 | T303034 | T493012 |
| Dll.C | 4 | T303035 | T493013 |
| Ig.V | 5 | T303036000 | |
| Dll.V | 6 | T303037 | T493014 |
| BMF | 7 | T903006000 | |
| VF2 | 8 | | T743002 |
| Proln | 9 | ---------- | |
| Lz | 10 | T303031 | T493010 |
| Lav | 11 | T333009 | |
| Rst | 12 | T523004 | |
| TFT | 13 | T853003 | |
| USB | 14 | T723008 | |
| Esquema | - | T643005000 | |
| Leyenda | - | T303042000 | |
| Ind.Comp | - | T303043000 | |

| | | | | | |
|---|---|---|---|---|---|
| - | Plano Montaje HGV-HGP 380V | - | - | T953003000 | - |
| Zk./Nº | Pieza | Cant. | Materiala/Material | Klas. zk/Nº Clas. | Gainazal akabera/Tratamiento |
| Zk./Nº | Aldaketa/Modificaciones | | Nork proposatua/Propuesta de | Data/Fecha | Perdoi orokorrak Tolerancias generales |
| 1 | Modificar distanciade las canaletas de 150 a175 mm. | | jeskibel | 2007-07-05 | < 5 ± 0.2 / 50 ÷ 100 ± 0.8 |
| - | - | | - | - | 5 ÷ 25 ± 0.4 / >100± 1 |
| - | - | | - | - | 25 ÷ 50 ± 0.6 / α ± 1 |
| - | - | | - | - | |
| - | - | | - | - | |

| | Sinadura/Firma | Data/Fecha |
|---|---|---|
| Marraztua/Dibujado | M.Maillo | 2011-07-05 |
| Proiektatua/Proyectado | M.Maillo | 2011-07-05 |
| Egiaztatua/Comprobado | LIBURETAGOIENA | 2011-07-05 |
| Eskala/Escala | - | |

FAGOR
Fagor Industrial,Koop.Elk, Mugatua

# HORNOS

Plano hau ezin daiteke erabili, ez berriztatu, gure baimenik gabe.

Gainazal perdoia Mecanizado superficial —

Plano Zk./Plano Nº HD -13183

- Zk. ord. du
- Zk.gaitik ord.

**Variador de Siemens.**
**Pulsar [P] paraentrar o salir de los Parmetros.**
**Nota. Si se modifica algunvalor del nivel Basico, hay que volver a grabar el nivel 3.**

P0010 = 1 Para inicio programación. (Nivel Basico)
P0100 = 0 ( Valor en KW 50Hz Europa)
P0304 = 230 (Vn V)
P0305 = 1,8 (Inb A)
P0307 = 0,37 (Pn KW)
P0310 = 50 (Fn Hz)
P0311 = 1400 (rpm Nom)
P0700 = 2 (Terminal)
P1000 = 2 (Consigna ADC)
P1080 = 25 (F.min Hz)
P1082 = 50 (F.Max Hz)
P1120 = 5" (Ton ")
P1121 = 5" (Toff ")
P3900 = 1 (Fin de la programación y grabación de datos.)
**P0003 =3 (Nivel 3 Experto).**
P0005 = 27 (Visualizacion = Corriente de salida)
P0611 = 16000 (Tiempo de activación de sobrecarga Seg.)
P0640 = 150 (Sobrecarga de corriente en %)
P1210 = 6 (Rearranque automático)
P1300 = 2 (Modo Parábola, Ventilador)
P1800 = 16 (F.Base KHz) (Cuanto mas alto: - ruido acústico )
P2000 = 50 (F.Refencia de la consigna Hz)

COPIAR PARAMETROS DESDE EL BOP AL VARIADOR

P0003 = 3
P0010= 30
P0803 = 1

SOLO USAR CUANDO EL BOP SE HA BORRADO

P0802 desde Variador a BOP

| | | 10 2 | | 20 2 |
|---|---|---|---|---|
| | | VG | VPG | VG |
| Genrl | 1 | T643007000 | | |
| Soplt | 2 | T303058 | | T493011 |
| Ig.C | 3 | T303034 | | T493012 |
| Dll.C | 4 | T303035 | | T493013 |
| Ig.V | 5 | T303036000 | | |
| Dll.V | 6 | T303037 | | T493014 |
| BMF | 7 | T903006000 | | |
| VF2 | 8 | | | T743002 |
| Proln | 9 | ---------- | | |
| Lz | 10 | T303031 | | T493010 |
| Lav | 11 | | T333009 | |
| Rst | 12 | | T523004 | |
| TFT | 13 | | T853003 | |
| USB | 14 | | T723008 | |
| Esquema | - | T643005000 | | |
| Leyenda | - | T303042000 | | |
| Ind.Comp | - | T303043000 | | |

R-033002
PRENSAESTOPAS

Tornillo M
LATON Q0
Cable n
Tuerca
LAT
Q163

| | ESPAÑOL | FRANÇAIS | ENGLISH | DEUTSCH | ITALIANO |
|---|---|---|---|---|---|
| BEC | Bujía Encendido Cámara | Bougie Allumage Chambre | Chamber Spark Plug | Zündkerze Einschalten Garraum | Candela di Accensione Camera |
| BEV | Bujía Encendido Caldera | Bougie Allumage Chaudière | Boiler Spark Plug | Zündkerze Einschalten Boile | Candela di Accensione Caldaia |
| C.C. | Control Camara | Contrôle Chambre | Chamber Control | Steuerung Garraum | Controllo Camera |
| C.E.C | Control Combustión Cámara | Contrôle Combustion Chambre | Chamber Combustion Control | Steuerung Verbrennung Garraum | Controllo Combustione Camera |
| C.E.V | Control Combustión Caldera | Contrôle Combustion Chaudière | Boiler Combustion Control | Steuerung Verbrennung Boiler | Controllo Combustione Caldaia |
| C.G. | Control Gas | Contrôle Gaz | Control Gas | Steuern Sie Gas | Controlli il gas |
| C.V. | Control Caldera | Contrôle Chaudière | Boiler Control | Steuerung Boiler | Controllo Caldaia |
| CC1, CC2 | Contactor Resistencia Cámara | Contacteur Élément Chauffant Chambre | Chamber Heating Element Contactor | Schütz Heizwiderstand Garraum | Contattore Resistenza Camera |
| CK1, CK2 | Contactor General Calentamiento | Relais Élément Chauffant | Heating Element Relay | Relais Heizwiderstand | Relè Resistenza |
| CV1, CV2 | Contactor Resistencias Caldera | Contacteur Élément Chauffant Chaudière | Boiler Heating Element Contactor | Schütz Heizwiderstand Boiler | Contattore Resistenza Caldaia |
| DEC | Detector Llama Cámara | Détecteur Flamme Chambre | Chamber Flame Detector | Flammendetektor Garraum | Rilevatore di Fiamma Camera |
| DEV | Detector Llama Caldera | Détecteur Flamme Chaudière | Boiler Flame Detector | Flammendetektor Boiler | Rilevatore di Fiamma Caldaia |
| DN | Detector Nivel Caldera | Détecteur Niveau Chaudière | Boiler Level Detector | Pegeldetektor Boiler | Rilevatore Livello Caldaia |
| F | Fusibles | Fusibles | Fuses | Sicherungen | Fusibili |
| FI | Filtro Interferencias | Filtre Interférences | Interference Filter | Störungsfilter | Filtro Interferenze |
| FM | Térmico Motor | Thermique Moteur | Thermal Engine | Thermoschalter Motor | Termico Motore |
| GV1, GV2 | Electro válvula Gas Cámara | Électrovanne Gaz Chambre | Chamber Gas Solenoid Valve | Elektroventil Gas Garraum | Elettrovalvola Gas Camera |
| GV3, GV4 | Electro válvula Gas Caldera | Électrovanne Gaz Chaudière | Boiler Gas Solenoid Valve | Elektroventil Gas Boiler | Elettrovalvola Gas Caldaia |
| Ip | Interruptor Seguridad Puerta | Interrupteur Sécurité Porte | Door Safety Switch | Sicherheitsschalter Tür | Iterruttore Sicurezza Porta |
| Lz | Luz Interior | Éclairage Intérieur | Inner Light | Innenbeleuchtung | Luce Interna |
| M, M2 | Motor Turbina | Moteur Turbine | Turbine Engine | Motor Turbine | Motore Turbina |
| Ma | Interruptor Micro Abierto | Microrupteur Ouvert | Open Microswitch | Mikroschalter Geöffnet | Iterruttore Micro Aperto |
| Mb | Interruptor Micro Bajada | Microrupteur Descente | Drop Microswitch | Mikroschalter Senken | Iterruttore Micro Discesa |
| Mc | Interruptor Micro Cerrado | Microrupteur Fermé | Closed Microswitch | Mikroschalter Geschlossen | Iterruttore Micro Chiuso |
| Mch | Motor Chimenea | Moteur Cheminée | Stack Engine | Motor Abluftkamin | Motore Canna |
| MD | Motor Desague | Moteur évacuation | Drain Engine | Motor Abfluss | Motore scolo |
| Ms | Interruptor Micro Subida | Microrupteur Montée | Rise Microswitch | Mikroschalter Heben | Iterruttore Micro Salita |
| PF | Potenciómetro Selector Funciones | Potentiomètre Sélecteur Fonctions | Functions Selector Potentiometer | Potentiometer Funktionswahlschalter | Potenziometro Selettore Funzioni |
| RC | Resistencias Cámara | Éléments Chauffants Chambre | Chamber Heating Element | Heizwiderstände Garraum | Resistenze Camere |
| RG | Rele General | Relais Général | Main Relay | Hauptrelais | Relè principale |
| RV | Resistencias Caldera | Éléments Chauffants Chaudière | Boiler Heating Element | Heizwiderstände Boiler | Resistenze Caldaia |
| Tc | Sonda Cámara | Sonde Chambre | Chamber Probe | Sonde Garraum | Sonda Camera |
| TCN | Termostato Condensación | Thermostat Condensation | Condensation Thermostat | Thermostat Kondensierung | Termostato Condensazione |
| Tg | Sonda Caldera | Sonde Chaudière | Boiler Probe | Sonde Boiler | Sonda Caldaia |
| Tn | Sonda Núcleo | Sonde Noyau | Core Probe | Kerntemperaturmessonde | Sonda Nucleo |
| TRF | Transformador | Transformateur | Transformer | Transformator | Trasformatore |
| TSC | Termostato Seguridad Cámara | Thermostat Sécurité Chambre | Chamber Safety Thermostat | Sicherheitsthermostat Garraum | Termostato Sicurezza Camera |
| TSV | Termostato Seguridad Caldera | Thermostat Sécurité Chaudière | Boiler Safety Thermostat | Sicherheitsthermostat Boiler | Termostato Sicurezza Caldaia |
| Tv | Sonda Vapor | Sonde Vapeur | Steam Probe | Sonde Dampf | Sonda Vapore |
| VAC | Bomba Vaciado | Pompe Vidange | Vacuum Pump | Ablasspumpe | Pompa scarico |
| MBA | Moto Bomba Aclarado | Pompe Rinçage | Rinsing Pump | Pumpe Ausspülen | Pompa Risciacquo |
| VC1, VC2 | Ventilador Soplante Camara | Ventilateur Soufflant | Blowing Fan | Ventilator Gebläse | Ventilatore Soffiante |
| VCN | Electro válvula Condensación | Électrovanne Condensation | Condensation Solenoid Valve | Elektroventil Kondensierung | Elettrovalvola Condensazione |
| VDV | Electro válvula Llenado Caldera | Électrovanne Remplissage Chaudière | Chamber Filling Solenoid Valve | Elektroventil Füllung Boiler | Elettrovalvola di Riempimento Caldaia |
| VE | Ventilador Cuadro Eléctrico | Ventilateur Tableau Électrique | Fan Switchboard | Ventilator Elektrotafel | Ventilatore Quadro Elettrico |
| VF1,VF2 | Variador de Frecuencia | Variateur Vitesse | Speed Variator | Geschwindigkeitsregler | Variatore di Velocità |
| VHM | Electro válvula Humidificador | Électrovanne Humidificateur | Humidifier Solenoid Valve | Elektroventil Befeuchtungsvorrichtung | Elettrovalvola Umidificatore |
| Vv | Ventilador Soplante Caldera | Ventilateur soufflement chaudière | Boiler Blowing Fan | Durchbrennenventilator zum Dampfkessel | Ventilatore Soffiante caldaia |
| | **COLORES** | **COULEURS** | **COLOUR** | **FARBEN** | **COLORE** |
| a | Azul | Bleu | Blue | Blau | Blu |
| am | Amarillo | Jaune | Yellow | Gelb | Giallo |
| am/ve | Amarillo/verde | Jaune / vert | Yellow / green | Gelb/grün | Giallo/verde |
| b | Blanco | Blanc | White | Weiß | Bianco |
| g | Gris | Gris | Grey | Grau | Grigio |
| m | Marrón | Marron | Brown | Braun | Marrone |
| n | Negro | Noir | Black | Schwarz | Nero |
| na | Naranja | Orange | Orange | Orange | Arancio |
| r | Rojo | Rouge | Red | Rot | Rosso |
| rs | Rosa | Rose | Pink | Rosa | Roseo |
| ve | Verde | Vert | Green | Grün | Verde |
| vi | Violeta | Violet | Purple | Violett | Viola |
| | | | | | T303042000 |