DESPIECE TECNICO

Fry-tops a gas
Gas fry-tops
Fry-tops à gaz
Gas-griddle-platten
Fry-tops a gas
Fry-tops a gás

GAMA 900

Modelos:

FTG9-05
FTG9-10
FTG9-05 V
FTG9-10 V

Marzo 2009 March
Revisado Mayo 2014 May Revised

FAGOR

FAGOR INDUSTRIAL

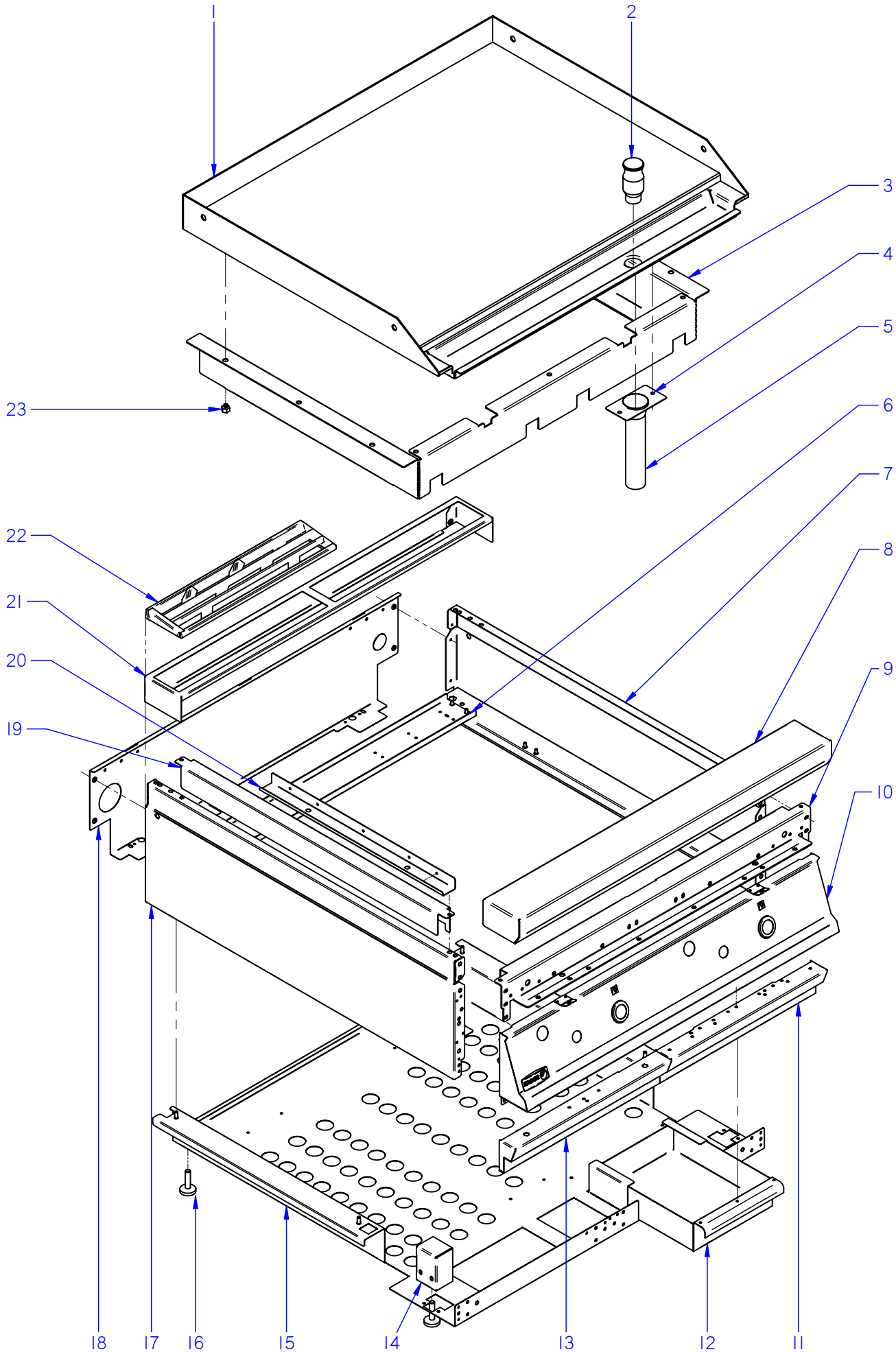

ITEM MARCADO EN COLOR = REPUESTO RECOMENDADO
COLOURED ITEM = RECOMMENDED SPARE PART

N plano	Firma	Fecha	Aparato	MUEBLE	Lamina	
C-2285		2009-03	FRY-TOP FTG9-05 / FTG9-10		1	Fagor Industrial S.Coop. FAGOR Oñate

MOD.	FRY-TOP	ZONA	MUEBLE	PLANO	C-2285

ITEM	CODIGO	DENOMINACION	TEXTO	FTG9-05	FTG9-10	FTG9-05 V	FTG9-10 V				NOTAS
1	R045402000	PLANCHA FTG9-05 L EUROSIT	PLATE FTG9-05 L EUROSIT	1	_	_	_				
1	R045405000	PLANCHA FTG9-05 R EUROSIT	PLATE FTG9-05 R EUROSIT	1	_	_	_				
1	R045404000	PLANCHA FTG/C9-05 L EUROSIT	PLATE FTG/C9-05 L EUROSIT	1	_	_	_				
1	R045406000	PLANCHA FTG/C9-05 R EUROSIT	PLATE FTG/C9-05 R EUROSIT	1	_	_	_				
1	R065401000	PLANCHA FTG9-10 L EUROSIT	PLATE FTG9-10 L EUROSIT	_	1	_	_				
1	R065408000	PLANCHA FTG9-10 R EUROSIT	PLATE FTG9-10 R EUROSIT	_	1	_	_				
1	R065406000	PLANCHA FTG9-10 L+R EUROSIT	PLATE FTG9-10 L+R EUROSIT	_	1	_	_				
1	R065405000	PLANCHA FTG/C9-10 L EUROSIT	PLATE FTG/C9-10 L EUROSIT	_	1	_	_				
1	R065409000	PLANCHA FTG/C9-10 R EUROSIT	PLATE FTG/C9-10 R EUROSIT	_	1	_	_				
1	R065407000	PLANCHA FTG/C9-10 L+R EUROS.	PLATE FTG/C9-10 L+R EUROS.	_	1	_	_				
1	R045407000	PLANCHA FTG9-05 L VALVULA	PLATE FTG9-05 L VALVE	_	_	1	_				
1	R045408000	PLANCHA FTG9-05 R VALVULA	PLATE FTG9-05 R VALVE	_	_	1	_				
1	R065410000	PLANCHA FTG9-10 L VALVULA	PLATE FT9-10 L VALVE	_	_	_	1				
1	R065412000	PLANCHA FTG9-10 R VALVULA	PLATE FTG9-10 R VALVE	_	_	_	1				
1	R065411000	PLANCHA FTG-910 L+R VALVULA	PLATE FTG-910 L+R VALVE	_	_	_	1				
2	R045415000	TAPON DESAGÜE CR-DURO	DRAINAGE CAP CHROME PLATE	1	1	_	_				SOLO CROMO DURO
3	R042610000	CAJA COMBUSTIÓN 1/2 M	COMBUSTION BOX 1/2 M	1	_	1	_				ELIMINADO 15.04.10
3	R162638000	PROTECCIÓN LATERAL	LATERAL PROTECTION	1	1	1	1				INTRODUCIDO 15.04.10
3	R042608000	LISTON FRONTAL FTG9-05	RIBBON FRONT FTG9-05	1	_	1	_				INTRODUCIDO 15.04.10
3	R162645000	CAJA COMBUSTIÓN 1 M	COMBUSTION BOX 1 M	_	1	_	1				ELIMINADO 31.03.10
3	R162643000	LISTON FRONTAL FTG9-10	RIBBON FRONT FTG9-10	_	1	_	1				INTRODUCIDO 31.03.10
	Q012042000	TORNILLO EXAGONAL M6X15 A304	HEXAGONAL BOLT M6X15 A.304	2	3	2	3				
4	R152607000	SOPORTE TUBO DESAGÜE	DRAINAGE PIPE SUPPORT	1	1	1	1				
	Q302022000	ARANDELA 16X6X1.2 A.304	WASHER 16X6X1.2 A.304	2	2	2	2				
	Q162040000	TUERCA EXAGONAL M6	HEXAGONAL NUT M6	2	2	2	2				
5	R155010000	TUBO DESAGÜE FRY-TOP G-900	DRAINAGE PIPE FRY-TOP G900	1	1	1	1				
6	R152622000	BASE SOP. QUEMADOR FTG9-05	FTG9-05 BURNER BRACKET BAS	1	_	1	_				
6	R162642000	BASE SOP. QUEMADOR FTG9-10	FTG9-10 BURNER BRACKET BAS	_	1	_	1				
	Q262030000	ARANDELA GROW. A5 A.304	WASHER GROW. A6 A.304	4	4	4	4				
	Q162040000	TUERCA EXAGONAL M6	HEXAGONAL NUT M5	4	4	4	4				

MOD.	FRY-TOP	ZONA	MUEBLE	PLANO	C-2285

ITEM	CODIGO	DENOMINACION	TEXTO	FTG9-05	FTG9-10	FTG9-05 V	FTG9-10 V				NOTAS
7	R062810000	PANEL LATERAL DERECHO G9-00	RIGHT SIDE PANEL G900	1	1	1	1				
	Q221342000	REMACHE EXAGONAL M5	HEXAGONAL RIVET M5	7	7	7	7				
	Q162030000	TUERCA EXAGONAL M5	HEXAGONAL NUT M5	2	2	2	2				
	Q221345000	REMACHE EXAGONAL M10	HEXAGONAL RIVET M10	2	2	2	2				
	Q419005000	REMACHE 4X8 ALMG3 / ALUMINIO	RIVET 4X8 ALMG3 / ALUMINIUM	2	2	2	2				
8	R045416000	ANTERIOR DE MESA 1/2 M	FRONT BENCH 1/2 M	1	_	1	_				
8	S105402000	ANTERIOR DE MESA 1 M	FRONT BENCH 1 M	_	1	_	1				
	Q152004000	TORN. APLASTADO M5x13 A304	FLAT HEADED SCREW M5x13	2	2	2	2				
9	X162680000	ESCUADRA AMARRE ANTER.1/2 M	FRONT FASTENING BRACKET	1	_	1	_				
9	U022605000	ESCUADRA AMARRE ANTERI.1M	FRONT FASTENING BRACKET	_	1	_	1				
	Q221342000	REMACHE EXAGONAL M5	HEXAGONAL RIVET M5	3	4	3	4				
	Q012032000	TORNILLO EXAGONAL M5X15 A304	HEXAGONAL BOLT M5X15 A304	6	6	6	6				
10	R042827000	PORTAMANDOS FTG9-05 EUR	CONTROL HOLDER FTG9-05 E	1	_	_	_				
10	R062822000	PORTAMANDOS FTG9-10 EUR	CONTROL HOLDER FTG9-10 E	_	1	_	_				
10	R042826000	PORTAMANDOS FTG9-05 V	CONTROL HOLDER FTG9-05 V	_	_	1	_				
10	R062824000	PORTAMANDOS FTG9-10 V	CONTROL HOLDER FTG9-10 V	_	_	_	1				
	U022836000	ESCUDO FAGOR	FAGOR EMBLEM G700	1	1	1	1				
	Q221023000	CLIP SUJECIÓN RÁPIDA Ø5	RAPID CONNECT CLIP Ø5	2	2	2	2				
11	H012821000	ASA BANDEJA IZQUIER.-DERECHA	SKIRTING ASA	1	1	1	1				
12	R152608000	CAJA RECOGEGRASAS	GREASE COLLECTION TRAY	1	1	1	1				
	Q419005000	REMACHE 4x8 ALMG3 / ALUMINIO	RIVET 4X8 ALMG3 / ALUMINIUM	3	3	3	3				
13	R062805000	ZOCALO INFERIOR FRY-TOP	SKIRTING ASA	_	1	_	1				
	Q012042000	TORNILLO EXAGONAL M6x15	HEXAGONAL BOLT M6X15	_	2	_	2				
	Q302022000	ARANDELA 16x6x1,2 A304	WASHER 16X6X1.2 A.304	_	2	_	2				
14	H012805000	ESCUADRA AMARRE PATA	LEG FASTENING BRACKET	2	2	2	2				
	X010503000	CIERRE MUELLE	LOCK SPRING	2	2	2	2				
	Q419007000	REMACHE TUBULAR C/V Ø3,2x6	TUBULAR RIVET C/V Ø3.2X6	4	4	4	4				
	Q162030000	TUERCA EXAGONAL M5	HEXAGONAL NUT M5	4	4	4	4				
	Q262030000	ARANDELA GROW. A5 A304	WASHER GROW. A5 A.304	4	4	4	4				

MOD.	FRY-TOP	ZONA	MUEBLE	PLANO	C-2285

ITEM	CODIGO	DENOMINACION	TEXTO	FTG9-05	FTG9-10	FTG9-05 V	FTG9-10 V				NOTAS
15	R152820000	BASE INFERIOR FTG9-05 COMPL.	LOWER BASE FTG9-05	1	_	1	_				
15	R162821000	BASE INFERIOR FTG9-10 COMPL.	LOWER BASE FTG9-10	_	1	_	1				
	Q221345000	REMACHE EXAGONAL M10	HEXAGONAL RIVET M10	2	2	2	2				
	Q221343000	REMACHE EXAGONAL M6	HEXAGONAL RIVET M6	_	2	_	2				
16	Z200107000	PATA REGULABLE	ADJUSTABLE LEG	4	4	4	4				
	Q221345000	REMACHE EXAGONAL M10	HEXAGONAL RIVET M10	4	4	4	4				
17	R062811000	PANEL LATERA IZQUIERDO G-900	LEFT SIDE PANEL G-900	1	1	1	1				
	Q221342000	REMACHE EXAGONAL M5	HEXAGONAL RIVET M5	7	7	7	7				
	Q162030000	TUERCA EXAGONAL M5	HEXAGONAL NUT M5	2	2	2	2				
	Q221345000	REMACHE EXAGONAL M10	HEXAGONAL RIVET M10	2	2	2	2				
	Q419005000	REMACHE 4X8 ALMG3 / ALUMINIO	RIVET 4X8 ALMG3 / ALUMINIUM	2	2	2	2				
18	H012824000	PANEL POSTERIOR 1/2M	REAR PANEL 1/2M	1	_	1	_				
18	H022809000	PANEL POSTERIOR 1M	REAR PANEL 1M	_	1	_	1				
	Q419005000	REMACHE 4x8 ALMG3 / ALUMINIO	RIVET 4X8 ALMG3 / ALUMINIUM	4	4	4	4				
	X010503000	CIERRE MUELLE	LOCK SPRING	2	2	2	2				
19	R152807000	LATERAL DE MESA	BENCH SIDE	2	2	2	2				
	Q012032000	TORNILLO EXAGONAL M5X15 A304	HEXAGONAL BOLT M5X15 A304	6	6	6	6				
20	R152601000	TIRANTE LATERAL	SIDE TIE ROD	2	2	2	2				
	Q419005000	REMACHE 4X8 ALMG3 / ALUMINIO	RIVET 4X8 ALMG3 / ALUMINIUM	6	6	6	6				
21	R205438000	SOPORTE EMBELLECEDOR 1/2M	1/2M TRIM SUPPORT	1	_	1	_				
21	R205439000	SOPORTE EMBELLECEDOR 1M	TRIM SUPPORT 1M	_	1	_	1				
	Q419005000	REMACHE 4X8 ALMG3 / ALUMINIO	RIVET 4X8 ALMG3 / ALUMINIUM	2	2	2	2				
22	R205425000	EMBELLECEDOR ESMALTE	ENAMEL TRIM	1	2	1	2				
23	R615412000	APOYO LATERAL	SIDE SUPPORT	6	6	6	6				

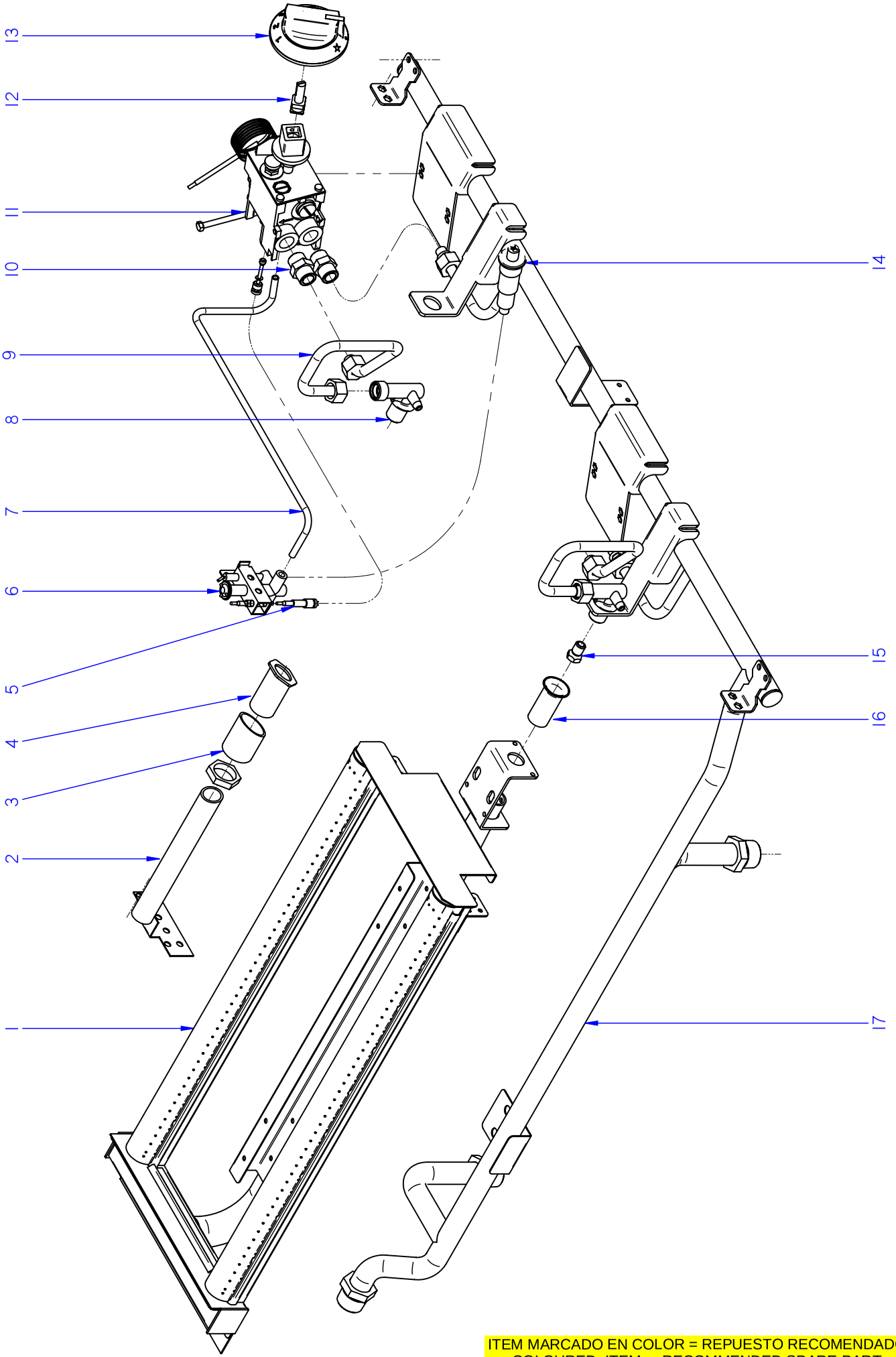

ITEM MARCADO EN COLOR = REPUESTO RECOMENDADO
COLOURED ITEM = RECOMMENDED SPARE PART

N plano	Firma	Fecha	Aparato		Lamina	
C-2286		2009-03	PARTE FUCIONAL FRY-TOP FTG9-05 / FTG9-10		2	Fagor Industrial S.Coop. Oñate

MOD.	FRY-TOP	ZONA	CONJUNTO FUNCIONAL	PLANO	C-2286

ITEM	CODIGO	DENOMINACION	TEXTO	FTG9-05	FTG9-10						NOTAS
1	R635700000	QUEMADOR COMPLETO FTG9-00	COMPLETE BURNER FTG-710	1	2						
	Q012031000	TORNILLO EXAGONAL M5x10 A304	HEXAGONAL BOLT M5X10 A304	2	4						
	Q302022000	ARANDELA 16x6x1,2 A304	HEXAGONAL BOLT M5X10 A304	2	4						
2	R045014000	TUBO ENCENDIDO COMPLETO	COMPLETE IGNITION PIPE	1	2						
3	R065025000	DISTANCIADOR	SPACER	1	2						
	Q221324000	TUERCA 3/4 GAS	NUT 3/4 GAS	1	2						
4	R042822000	EMBELLECED. TUBO ENCENDIDO	IGNITION PIPE TRIM	1	2						
5	U562130000	TERMOPAR L=850	THERMOCOUPLE L=850	1	2						
6	U322118000	PILOTO COMPLETO 100.062	COMPLETE PILOT LIGHT 100.062	1	2						
	U442137000	INYECTOR Ø 0.4 GN	INJECTOR Ø 0.4 GN.	1	2						
	Q012031000	TORNILLO EXAGONAL M5X10 A.304	HEXAGONAL BOLT M5X10 A.304	2	4						
7	R065042000	TUBO PILOTO EUROSIT	PILOT PIPE EUROSIT	1	2						ELIMINADO 01.07.13
7	12010623	TUBO PILOTO EUROSIT REMOD.	PILOT PIPE EUROSIT	1	2						INTRODUCIDO 01.07.13
8	U915014000	PORTATOBERAS HORNO	NOZZLE HOLDER	1	2						
	Q223019000	TUERCA 3/8 GAS LATÓN	NUT 3/8 GAS BRASS	1	2						
	Q301323000	ARANDELA Ø25X17X6	WASHER Ø25X17X6	1	2						
	Q306062000	ARANDELA Ø13,9X10,33X1,5	WASHER Ø13,9X10,33X1,5	1	2						
	Q153002000	TORNILLO TAPON	CAP BOLT	1	2						
9	R065031000	CONDUCC. QUEMADOR EUROSIT	BURNER PIPE EUROSIT	1	2						
	Q306062000	ARANDELA Ø13,9X10,33x1,5	WASHER Ø13.9X10.33x1.5	2	4						
10	R155068000	MANGUITO 3/8"	HOSE 3/8"	2	4						
11	R152102000	VALVULA 630 EUR 630.343 META	VALVE 630 EUR 630.343 META	1	2						
	T982102000	TAPON 3/8 972.061	CAP 3/8 972.061	2	4						
	Q011338000	TORNILLO EXAGONAL M5X60	HEXAGONAL SCREW M5X60	2	4						
12	R062102000	EJE BOTON MANDO EUROSIT META	CTRL. BUTTN. SHAFT EUROSIT M	1	2						
	Q012031000	TORNILLO EXAGONAL M5X10 A304	HEXAGONAL BOLT M5X10 A304	1	2						
13	R042102000	BOTON DE MANDO FTG EUR	CONTROL BUTTON FTG EUR	1	2						
14	S113034000	PIEZOELECTRICO	PIEZOELECTRIC	1	2						ELIMINADO 02.05.12
14	12043897	PIEZOELECTRICO COMPLETO	COMPLETE PIEZOELECTRIC	1	2						INTRODUCIDO 02.05.12
S/Nº	12043907	ANILLO ADAPTADOR	ADAPTER RING	1	1						INTRODUCIDO 02.05.12
S/Nº	X022131000	BUJIA	SPARK PLUG	1	2						

MOD.	FRY-TOP	ZONA	CONJUNTO FUNCIONAL	PLANO	C-2286

ITEM	CODIGO	DENOMINACION	TEXTO	FTG9-05	FTG9-10						NOTAS
15	9105100000	TOBERA Ø 1,50 B.P.	NOZZLE Ø 1,50 B.P.	1	2						
15	U052401000	TOBERA Ø 1,45 B.P	NOZZLE Ø 1,45 B.P	1	2						SOLO CROMO DURO
15	1011600000	TOBERA Ø 2,25 G.N.	NOZZLE Ø 2,25 G.N.	1	2						
15	U262400000	TOBERA Ø 2,15 G.N.	NOZZLE Ø 2,15 G.N.	1	2						SOLO CROMO DURO
16	U325707000	REGULADOR DE AIRE	AIR REGULATOR	1	2						
	Q012031000	TORNILLO EXAGONAL M5x10 A304	HEXAGONAL BOLT M5X10 A304	1	2						
17	R045017000	DISTRIBUCION FTG9-05 EUR	DISTRIBUTION FTG9-05 EUR	1	_						
17	R065037000	DISTRIBUCION FTG9-10 EUR	DISTRIBUTION FTG9-10 EUR	_	1						
	Q152004000	TORN. APLASTADO M5x13 A304	FLAT HEADED SCREW M5x13	2	2						
	Q162030000	TUERCA EXAGONAL M5	HEXAGONAL NUT M5	2	2						
	Q262030000	ARANDELA GROW. A5 A.304	WASHER GROW. A6 A.304	2	2						

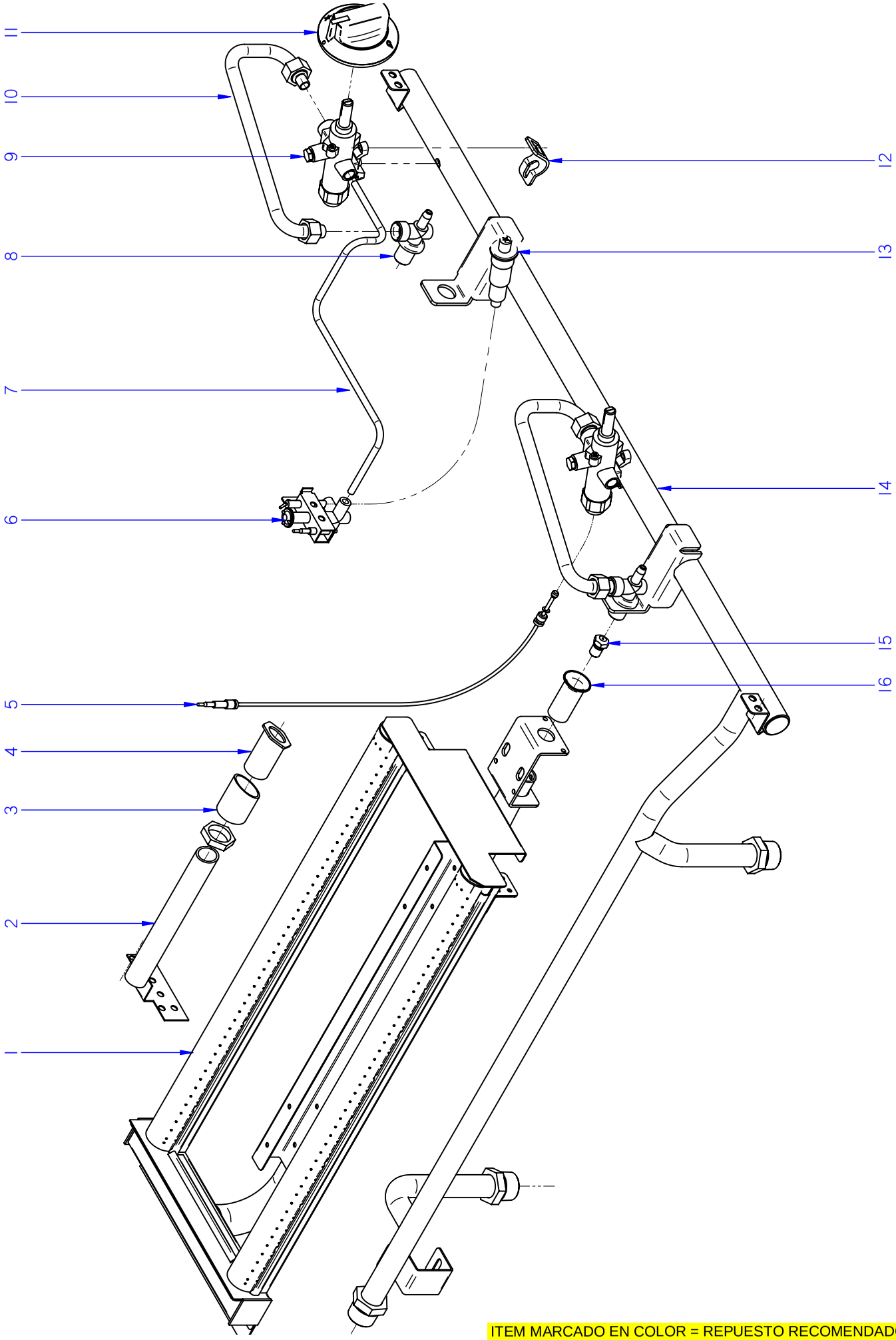

ITEM MARCADO EN COLOR = REPUESTO RECOMENDADO
COLOURED ITEM = RECOMMENDED SPARE PART

N plano	Firma	Fecha	Aparato	CONJUNTO FUNCIONAL	Lamina	
C-2287		2009-03	FRY-TOP FTG9-05 V / FTG9-10 V		3	Fagor Industrial S.Coop. FAGOR Onate

MOD.	FRY-TOP	ZONA	CONJUNTO FUNCIONAL	PLANO	C-2287

ITEM	CODIGO	DENOMINACION	TEXTO	FTG9-05 V	FTG9-10 V						NOTAS
1	R635700000	QUEMADOR COMPLETO FTG9-00	COMPLETE BURNER FTG-710	1	2						
	Q012031000	TORNILLO EXAGONAL M5x10 A304	HEXAGONAL BOLT M5X10 A304	2	4						
	Q302022000	ARANDELA 16x6x1,2 A304	HEXAGONAL BOLT M5X10 A304	1	4						
2	R045014000	TUBO ENCENDIDO COMPLETO	COMPLETE IGNITION PIPE	1	2						
3	R065025000	DISTANCIADOR	SPACER	1	2						
	Q221324000	TUERCA 3/4 GAS	NUT 3/4 GAS	1	2						
4	R042822000	EMBELLECED. TUBO ENCENDIDO	IGNITION PIPE TRIM	1	2						
5	U222130000	TERMOPAR L=600	THERMOCOUPLE L=600	1	2						
6	U322118000	PILOTO COMPLETO 100.062	COMPLETE PILOT LIGHT 100.062	1	2						
	U442137000	INYECTOR Ø 0.4 GN	INJECTOR Ø 0.4 GN.	1	2						
	Q012031000	TORNILLO EXAGONAL M5X10 A.304	HEXAGONAL BOLT M5X10 A.304	2	4						
7	R065043000	TUBO PILOTO	PILOT PIPE	1	2						ELIMINADO 01.07.13
7	12010625	TUBO PILOTO VALVULA REMODEL	PILOT PIPE	1	2						INTRODUCIDO 01.07.13
	X205028000	BICONO Ø6	BICONE Ø6	_	2						
8	U265033000	PORTATOBERAS Ø10	NOZZLE HOLDER Ø10	1	2						
	Q223019000	TUERCA 3/8 GAS LATÓN	NUT 3/8 GAS BRASS	1	2						
	Q301323000	ARANDELA Ø25X17X6	WASHER Ø25X17X6	1	2						
	Q306062000	ARANDELA Ø13,9X10,33X1,5	WASHER Ø13,9X10,33X1,5	1	2						
	Q153002000	TORNILLO TAPON	CAP BOLT	1	2						
9	R902102000	GRIFO 18700 BY-PASS 0,9	TAP 18700 BY-PASS 0.9	1	2						
	Q307034000	JUNTA ESTANQUEIDAD	SEAL	1	2						
	Q012033000	TORNILLO EXAGONAL M5X20 A304	HEXAGONAL BOLT M5X20 A304	1	2						
10	R065035000	CONDUCCION QUEMADOR V FTG	BURNER PIPE V FTG	1	2						
	Q306062000	ARANDELA Ø13,9X10,33x1,5	WASHER Ø13.9X10.33x1.5	2	4						
11	U022117000	BOTON DE MANDO Ø8	CONTROL BUTTON Ø8	1	2						
12	U912104000	BRIDA AMARRE GRIFO 1/2"	TAP FASTENING FLANGE 1/2"	1	2						
	Q122032000	TORNILLO ALLEN M.5x15	ALLEN HEAD SCREW M.5x15	2	4						
13	S113034000	PIEZOELECTRICO	PIEZOELECTRIC	1	2						ELIMINADO 02.05.12
13	12043897	PIEZOELECTRICO COMPLETO	COMPLETE PIEZOELECTRIC	1	2						INTRODUCIDO 02.05.12
S/Nº	12043907	ANILLO ADAPTADOR	ADAPTER RING	1	1						INTRODUCIDO 02.05.12
S/Nº	X022131000	BUJIA	SPARK PLUG	1	2						

MOD.	FRY-TOP	ZONA	CONJUNTO FUNCIONAL	PLANO	C-2287

ITEM	CODIGO	DENOMINACION	TEXTO	FTG9-05 V	FTG9-10 V						NOTAS
14	R045019000	DISTRIBUCION FTG9-05 V	DISTRIBUTION FTG9-05 V	1	_						
14	R065039000	DISTRIBUCION FTG9-10 V	DISTRIBUTION FTG9-10 V	_	1						
	Q221342000	REMACHE EXAGONAL M5	HEXAGONAL RIVET M5	2	2						
	Q152004000	TORN. APLASTADO M5x13 A304	FLAT HEADED SCREW M5x13	2	2						
	Q162030000	TUERCA EXAGONAL M5	HEXAGONAL NUT M5	2	2						
	Q262030000	ARANDELA GROW. A5 A.304	WASHER GROW. A6 A.304	2	2						
15	9105100000	TOBERA Ø 1,50 B.P.	NOZZLE Ø 1,50 B.P.	1	2						
15	1011600000	TOBERA Ø 2,25 G.N.	NOZZLE Ø 2,25 G.N.	1	2						
15	X102403000	TOBERA Ø 4,58 G.V.	NOZZLE Ø 4,58 G.V.	1	2						
16	U325707000	REGULADOR DE AIRE	AIR REGULATOR	1	2						
	Q012031000	TORNILLO EXAGONAL M5x10 A304	HEXAGONAL BOLT M5X10 A304	1	2						

MOD.	FRY-TOP	ZONA	VARIOS	PLANO	

ITEM	CODIGO	DENOMINACION	TEXTO	FTG9-05	FTG9-10	FTG9-05 V	FTG9-10 V				NOTAS
	R046501000	FOLLETO DE INSTRUCC. FTG 700	INSTRUCTION LEAFLET FTG 700	1	1	1	1				
	R636500000	RASQUETA MARTOR	MARTOR SCRAPER	1	1	_	_				SOLO CROMO DURO
	R613030000	CABLE BUJIA	SPARK PLUG CABLE	1	1	1	2				
	U333003000	CABLE MASA ENCENDEDOR	LIGHTER EARTH CABLE	1	1	1	2				ELIMINADO 02.05.12
	12046142	CABLE. TENSOR PORTAMANDOS	WIRING TENSOR PORTAMAND.	_	1	_	_				INTRODUCIDO 01,10,12

MOD.	FRY-TOP	ZONA	PIEZAS ESPECIFICAS PARA LOS DISTINTOS GASES	PLANO	C-2286 C-2287

ITEM	CODIGO	DENOMINACION		FTG9-05	FTG9-10	FTG/C9-05	FTG/C9-10	FTG9-05 V	FTG9-10 V			NOTAS
		BUTANO PROPANO	**BUTANE PROPANE**									
15	9105100000	TOBERA Ø 1,50 B.P.	NOZZLE Ø 1,50 B.P.	1	2	_	_	1	2			
15	U052401000	TOBERA Ø 1,45 B.P	NOZZLE Ø 1,45 B.P	_	_	1	2	_	_			
S/Nº	U136501000	INDICADOR BUTANO-PROPANO	INDICATOR BUTANE-PROPANE	1	1	1	1	1	1			
		GAS NATURAL	**NATURAL GAS**									
6	U442137000	INYECTOR Ø 0.4 GN.	INJECTOR Ø 0.4 GN.	1	2	1	2	1	2			
15	1011600000	TOBERA Ø 2,25 G.N,	NOZZLE Ø 2,25 G.N.			_	_	1	2			
15	U262400000	TOBERA Ø 2,15 G.N.	NOZZLE Ø 2,15 G.N.	_	_	1	2	_	_			
S/Nº	U134402000	INDICADOR GAS-NATURAL	INDICATOR GAS-NATURAL			1	1	1	1			
		GAS VILLA	**VILLA GAS**									
5	U442137000	INYECTOR Ø 0.4 GN	INJECTOR Ø 0.4 GN.	_	_	_	_	1	2			
13	X102403000	TOBERA Ø 4,58 G.V.	NOZZLE Ø 4,58 G.V.	_	_	_	_	1	2			
S/Nº	U134310000	INDICADOR GAS-VILLA	INDICATOR GAS-VILLA	_	_	_	_	1	1			

MOD.	FRY-TOP	ZONA	PIEZAS ESPECIFICAS PARA LA VERSION AUSTRALIA	PLANO	C-2286

ITEM	CODIGO	DENOMINACION		FTG9-05 A	FTG9-10 A							
		PIEZAS QUE SE ELIMINAN	**PARTS WHICH HAVE BEEN SUPI**									
15	9105100000	TOBERA Ø 1,50 B.P.	NOZZLE Ø 1,50 B.P.	1	2							
15	1011600000	TOBERA Ø 2,25 G.N.	NOZZLE Ø 2,25 G.N.	1	2							
		PIEZAS QUE SE INTRODUCEN	**PARTS WHICH HAVE BEEN INTR**									
15	N502401000	TOBERA Ø 1,70 B.P.	NOZZLE Ø 1,70 B.P.	1	2							
15	U122408000	TOBERA Ø 2,95 G.N.	NOZZLE Ø 2,95 G.N.	1	2							

MOD.	FRY-TOP	ZONA	REPUESTOS RECOMENDADOS RECOMMENDED SPARE PART	PLANO	

ITEM	CODIGO	DENOMINACION	TEXTO	FTG9-05	FTG9-10	FTG9-05 V	FTG9-10 V				NOTAS
5	U562130000	TERMOPAR L=850	THERMOCOUPLE L=850	1	2	_	_				C-2286
6	U322118000	PILOTO COMPLETO 100.062	COMPLETE PILOT LIGHT 100.062	1	2	_	_				C-2286
11	R152102000	VALVULA 630 EUR 630.343 META	VALVE 630 EUR 630.343 META	1	2	_	_				C-2286
12	R062102000	EJE BOTON MANDO EUROSIT META	CTRL. BUTTN. SHAFT EUROSIT M	1	2	_	_				C-2286
	Q012031000	TORNILLO EXAGONAL M5X10 A304	HEXAGONAL BOLT M5X10 A304	1	2	_	_				C-2286
14	12043897	PIEZOELECTRICO COMPLETO	COMPLETE PIEZOELECTRIC	1	2	_	_				C-2286
S/Nº	12043907	ANILLO ADAPTADOR	ADAPTER RING	1	1	_	_				C-2286
S/Nº	X022131000	BUJIA	SPARK PLUG	1	2	_	_				C-2286
5	U222130000	TERMOPAR L=600	THERMOCOUPLE L=600	_	_	1	2				C-2287
6	U322118000	PILOTO COMPLETO 100.062	COMPLETE PILOT LIGHT 100.062	_	_	1	2				C-2287
9	R902102000	GRIFO 18700 BY-PASS 0,9	TAP 18700 BY-PASS 0.9	_	_	1	2				C-2287