DESPIECE TECNICO

# Lavadoras

# Washing machines

## SERIE "EVOLUTION TECHNOLOGY"

**Modelos:**

**LF-8 M**
**LF-13 M**
**LF-18 M**

***Junio 2006 June***

**Fagor Industrial**

Fagor Industrial

# ***LAVADORA MODELO LF-8-13-18 M***



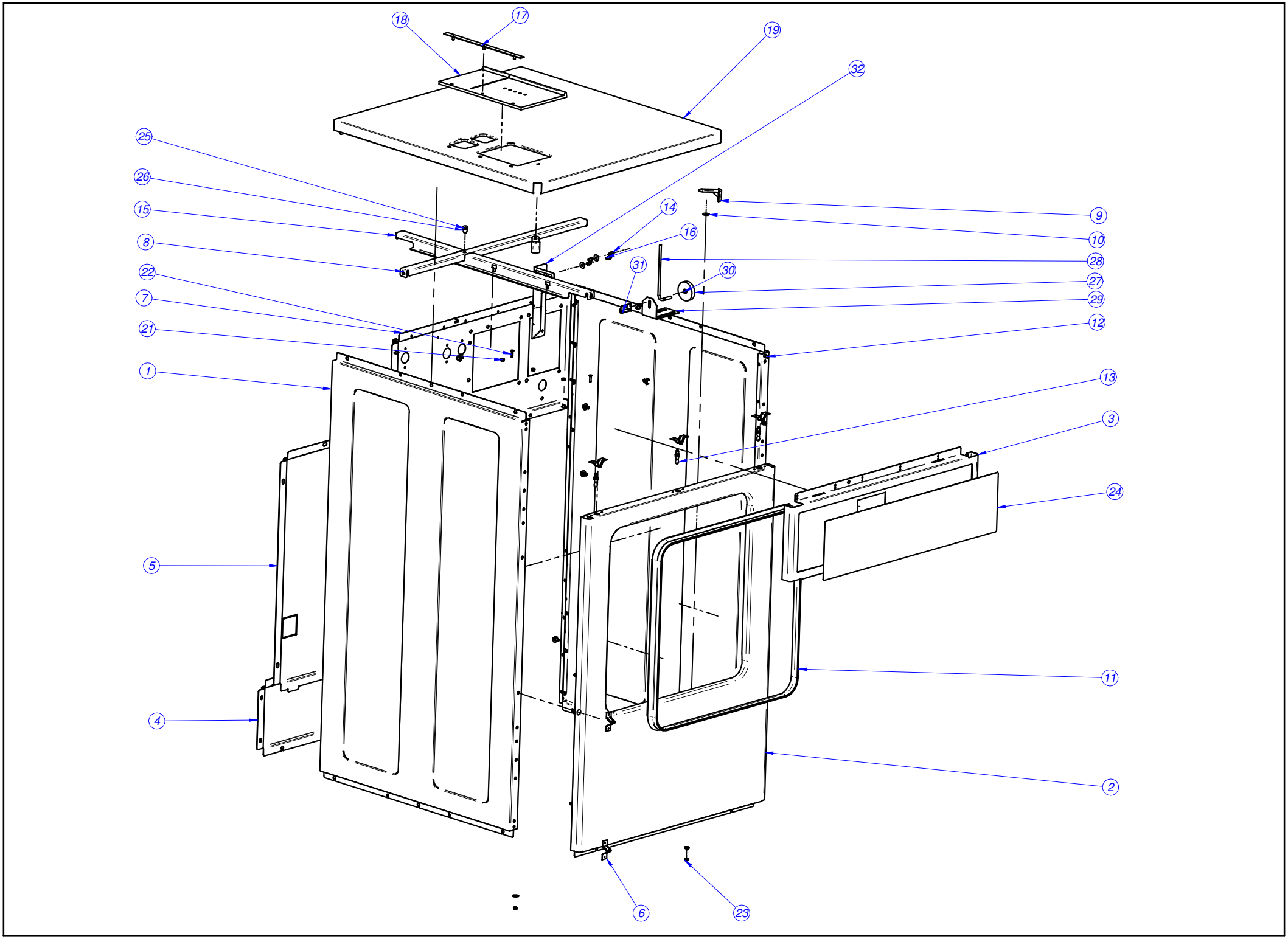
18
17
19
32
25
26
15
8
22
7
21
1
14
16
31
30
9
10
28
27
29
12
13
3
24
5
11
4
2
6
23

## LF-8

| | | | | |
|---|---|---|---|---|
| 1 | PANEL LATERAL 8 | 2 | AISI 304 | P610301000 |
| 2 | PANEL FRONTAL 8 | 1 | AISI 304 | P610302000 |
| 3 | PORTA MANDOS COMP. 8 M | 1 | | P610332000 |
| 4 | PANEL POSTERIOR DESAGÜE 8 | 1 | GALVANIZADO | P610306000 |
| 5 | PANEL POSTERIOR 8 V2 | 1 | GALVANIZADO | P610326000 |
| 6 | CIERRE MUELLE FREI.700 | 7 | | X010503000 |
| 7 | PANEL POSTERIOR TOMAS 8 V2 | 1 | GALVANIZADO | P610325000 |
| 8 | TRAVESAÑO PARALELO 8 | 1 | GALVANIZADO | P610335000 |
| 9 | CANTONERA ENCIMERA | 2 | POLIAMIDA 6.6 | P620316000 |
| 10 | ARANDELA 16X6X1.2 A.304 | 32 | AISI 304 | Q302022000 |
| 11 | CORTINA LF-8 | 1 | ETILENO-PROPILENO | P610314000 |
| 12 | REMACHE EXAG. M.5 (9688-0514) | 34 | ACERO-BICROMATADO | Q221342000 |
| 13 | PITON DE CIERRE | 7 | F-114 | P450303000 |
| 14 | ARAND.ABAN. A5 A.304 | 29 | AISI 304 | Q242030000 |
| 15 | TRAVESAÑO LONGITUDINAL 8 | 1 | GALVANIZADO | P610334000 |
| 16 | TORN.EXA. M5X10 A.304 | 30 | | Q012031000 |
| 17 | SOPOR.TAPA CUB. COMPLETA | 1 | | P440705000 |
| 18 | TAPA CUBETA 1002436 | 1 | | P440704000 |
| 19 | ENCIMERA COMPLETA 8 V2 | 1 | | P610330000 |
| 20 | ARANDELA A5 | 3 | AISI 304 | Q232030000 |
| 21 | TUER.EXA. M5 | 3 | | Q162030000 |
| 22 | TORN.AVE.M4X15 | 2 | AISI 304 | Q042022000 |
| 23 | TUE.EX.AUT.M5 H.ZINCADA | 2 | H.ZINCADO | Q221308000 |
| 24 | ADHESIVO PORTAMANDOS M | 1 | POLICARBONATO | P610319000 |
| 25 | REMACHE MAXLOK 6.4 | 1 | | Q411309000 |
| 26 | COLLAR MAXLOK 6.4 | 1 | | Q411310000 |
| 27 | IMAN DESEQUILIBRIO D50 | 1 | | P620337000 |
| 28 | INTERRUPTOR MAGNETICO | 1 | | Z203009000 |
| 29 | SOPORTE IMANES | 1 | AISI 304 | P620219000 |
| 30 | TORN. AVELLNADO M5x30 | 1 | AISI 304 | Q062035000 |
| 31 | AMARRE INTERRUPTOR MAGNETICO | 1 | | Z203010000 |
| 32 | PORTA MICRO SEGURIDAD 8 | 1 | AISI 304 | P610316000 |

## LF-13

| | | | | |
|---|---|---|---|---|
| 1 | PANEL LATERAL 13 | 2 | AISI 304 | P620302000 |
| 2 | PANEL FRONTAL 13 | 1 | AISI 304 | P620301000 |
| 3 | PORTA MANDOS COMP. 13 M | 1 | | P620348000 |
| 4 | PANEL POSTERIOR DESAGÜE 13 | 1 | GALVANIZADO | P620331000 |
| 5 | PANEL POSTERIOR 13 V2 | 1 | GALVANIZADO | P620334000 |
| 6 | CIERRE MUELLE FREI.700 | 7 | | X010503000 |
| 7 | PANEL POSTERIOR TOMAS 13 V2 | 1 | GALVANIZADO | P620331000 |
| 8 | TRAVESAÑO PARALELO 13 | 1 | GALVANIZADO | P620354000 |
| 9 | CANTONERA ENCIMERA | 2 | POLIAMIDA 6.6 | P620316000 |
| 10 | ARANDELA 16X6X1.2 A.304 | 32 | AISI 304 | Q302022000 |
| 11 | CORTINA LF-13/18 | 1 | ETILENO-PROPILENO | P620324000 |
| 12 | REMACHE EXAG. M.5 (9688-0514) | 34 | ACERO-BICROMATADO | Q221342000 |
| 13 | PITON DE CIERRE | 7 | F-114 | P450303000 |
| 14 | ARAND.ABAN. A5 A.304 | 29 | AISI 304 | Q242030000 |
| 15 | TRAVESAÑO LONGITUDINAL 13 | 1 | GALVANIZADO | P620353000 |
| 16 | TORN.EXA. M5X10 A.304 | 30 | | Q012031000 |
| 17 | SOPOR.TAPA CUB. COMPLETA | 1 | | P440705000 |
| 18 | TAPA CUBETA 1002436 | 1 | | P440704000 |
| 19 | ENCIMERA COMPLETA 13 V2 | 1 | | P620345000 |
| 20 | ARANDELA A5 | 3 | AISI 304 | Q232030000 |
| 21 | TUER.EXA. M5 | 3 | | Q162030000 |
| 22 | TORN.AVE.M4X15 | 2 | AISI 304 | Q042022000 |
| 23 | TUE.EX.AUT.M5 H.ZINCADA | 2 | H.ZINCADO | Q221308000 |
| 24 | ADHESIVO PORTAMANDOS M | 1 | POLICARBONATO | P610319000 |
| 25 | REMACHE MAXLOK 6.4 | 1 | | Q411309000 |
| 26 | COLLAR MAXLOK 6.4 | 1 | | Q411310000 |
| 27 | IMAN DESEQUILIBRIO D50 | 1 | | P620337000 |
| 28 | INTERRUPTOR MAGNETICO | 1 | | Z203009000 |
| 29 | SOPORTE IMANES | 1 | AISI 304 | P620219000 |
| 30 | TORN. AVELLNADO M5x30 | 1 | AISI 304 | Q062035000 |
| 31 | AMARRE INTERRUPTOR MAGNETICO | 1 | | Z203010000 |
| 32 | PORTA MICRO SEGURIDAD 13 | 1 | AISI 304 | P620326000 |

## LF-18

| | | | | |
|---|---|---|---|---|
| 1 | PANEL LATERAL 18 | 2 | AISI 304 | P630301000 |
| 2 | PANEL FRONTAL 18 | 1 | AISI 304 | P630303000 |
| 3 | PORTA MANDOS COMP. 18 M | 1 | | P630324000 |
| 4 | PANEL POSTERIOR DESAGÜE 18 | 1 | GALVANIZADO | P630307000 |
| 5 | PANEL POSTERIOR 8 V2 | 1 | GALVANIZADO | P610326000 |
| 6 | CIERRE MUELLE FREI.700 | 7 | | X010305000 |
| 7 | PANEL POSTERIOR TOMAS 18 V2 | 1 | GALVANIZADO | P630317000 |
| 8 | TRAVESAÑO PARALELO 18 | 1 | GALVANIZADO | P630330000 |
| 9 | CANTONERA ENCIMERA | 2 | POLIAMIDA 6.6 | P620316000 |
| 10 | ARANDELA 16X6X1.2 A.304 | 32 | AISI 304 | Q302022000 |
| 11 | CORTINA LF-13/18 | 1 | ETILENO-PROPILENO | P620324000 |
| 12 | REMACHE EXAG. M.5 (9688-0514) | 34 | ACERO-BICROMATADO | Q221342000 |
| 13 | PITON DE CIERRE | 7 | F-114 | P450303000 |
| 14 | ARAND.ABAN. A5 A.304 | 29 | AISI 304 | Q242030000 |
| 15 | TRAVESAÑO LONGITUDINAL 18 | 1 | GALVANIZADO | P630329000 |
| 16 | TORN.EXA. M5X10 A.304 | 30 | | Q012031000 |
| 17 | SOPOR.TAPA CUB. COMPLETA | 1 | | P440705000 |
| 18 | TAPA CUBETA 1002436 | 1 | | P440704000 |
| 19 | ENCIMERA COMPLETA 18 V2 | 1 | | P630323000 |
| 20 | ARANDELA A5 | 3 | AISI 304 | Q232030000 |
| 21 | TUER.EXA. M5 | 3 | | Q162030000 |
| 22 | TORN.AVE.M4X15 | 2 | AISI 304 | Q042022000 |
| 23 | TUE.EX.AUT.M5 H.ZINCADA | 2 | H.ZINCADO | Q221308000 |
| 24 | ADHESIVO PORTAMANDOS M | 1 | POLICARBONATO | P610319000 |
| 25 | REMACHE MAXLOK 6.4 | 1 | | Q411309000 |
| 26 | COLLAR MAXLOK 6.4 | 1 | | Q411310000 |
| 27 | IMAN DESEQUILIBRIO D50 | 1 | | P620337000 |
| 28 | INTERRUPTOR MAGNETICO | 1 | | Z203009000 |
| 29 | SOPORTE IMANES | 1 | AISI 304 | P620219000 |
| 30 | TORN. AVELLNADO M5x30 | 1 | AISI 304 | Q062035000 |
| 31 | AMARRE INTERRUPTOR MAGNETICO | 1 | | Z203010000 |
| 32 | PORTA MICRO SEGURIDAD 18 | 1 | AISI 304 | P630315000 |

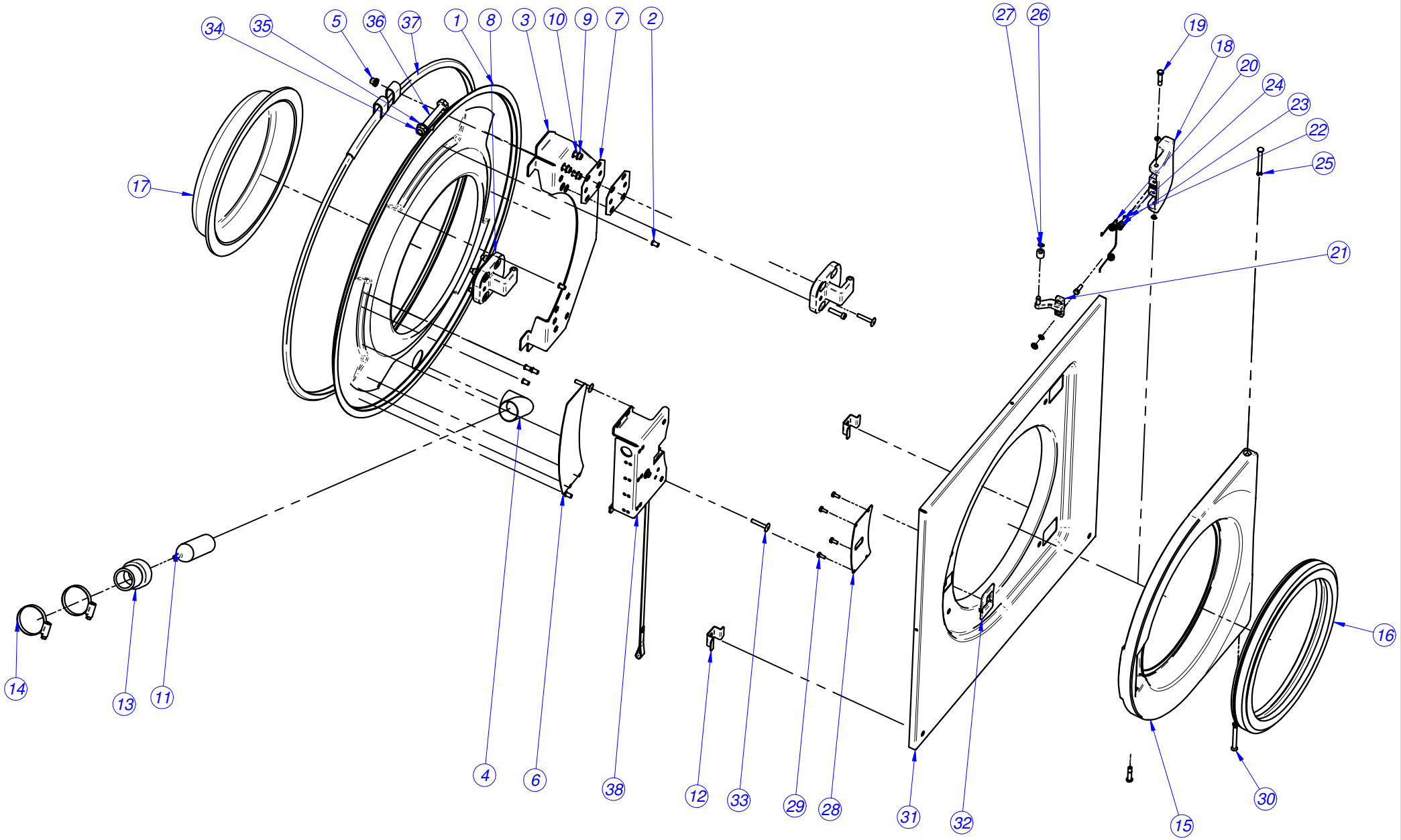
34
35
5
36
37
1
8
3
10
9
7
2
27
26
19
18
20
24
23
22
25
17
21
16
14
13
11
4
6
38
12
33
29
28
31
32
15
30

## LF-8

| | | | | |
|---|---|---|---|---|
| 1 | FRENTE CUBA COMPLETO 8 | | | P616112000 |
| | FRENTE CUBA 8 | 1 | AISI 304 | |
| | PERNO SOL.M6X10 | 8 | AISI 304 | |
| | CALZO PUERTA 8 | 1 | AISI 304 | |
| | CODO PRESOSTATO | 1 | AISI 304 | |
| | REMACHE EXAGONAL M6 | 8 | ACERO BICROMATADO | |
| | REFUERZO FRENTE-CIERRE | 1 | AISI 304 | |
| 7 | CALZO BISAGRA | 4 | GALVANIZADO | P620521000 |
| 8 | BISAGRA PUERTA | 2 | AISI 304 | P620502000 |
| 9 | ARANDELA A6 | 8 | AISI 304 | Q232040000 |
| 10 | TORN. ALLEN M6x35 | 8 | AISI 304 | Q122045000 |
| 11 | CAMARA PRESOSTATO | 1 | | P445002000 |
| 12 | CALZO FONDO PUERTA 8 | 2 | AISI 304 | P610331000 |
| 13 | CONDUCTO PRESOSTATO | 1 | Etileno propileno | P620711000 |
| 14 | ABRAZADERA 32-50L | 2 | | Q881306000 |
| 15 | PUERTA 8 | 1 | L-2640 | P610502000 |
| 16 | JUNTA PUERTA 1002315 | 1 | | P440502000 |
| 17 | MIRILLA DE PUERTA | 1 | | P440503000 |
| 18 | MANETA PUERTA 8,13,18 | 1 | L-2640 | P620504000 |
| 19 | PASADOR CIERRE | 2 | AISI 303 | P620511000 |
| 20 | MUELLE CIERRE | 1 | ACERO RESORTES | P620510000 |
| 21 | GANCHO REGULABLE CIERRE | 1 | AISI 304 | P620505000 |
| 22 | ARANDELA A5 | 2 | AISI 304 | Q232030000 |
| 23 | ARAND.ABAN. A5 A.304 | 2 | AISI 304 | Q242030000 |
| 24 | TORN.EXA. M5X15 A.304 | 2 | | Q012032000 |
| 25 | ARANDELA SEGURIDAD 4 | 4 | ACERO INOX. | Q272020000 |
| 26 | ANILLO SEG. A6 DIN471 | 1 | INOXIDABLE | Q302061000 |
| 27 | CASQUILLO PUERTA | 1 | ERTALYTE | P610506000 |
| 28 | TAPA CIERRE 8 | 1 | GALVANIZADO | P610504000 |
| 29 | TORN.ALOM.M4X10 | 4 | | Q032021000 |
| 30 | PASADOR PUERTA | 2 | AISI 303 | P620514000 |
| 31 | FONDO PUERTA 8 | 1 | AISI 304 | P610501000 |
| 32 | EMBELLECEDOR CIERRE | 1 | POLIAMIDA 6.6 | P620515000 |
| 33 | TORNILLO ALOMADO M5x15 | 6 | AISI 304 | Q032032000 |
| 34 | TUE.EX.AUT.M10 8.8 ZIN | 1 | | Q221306000 |
| 35 | ARANDELA A10 | 1 | | Q232060000 |
| 36 | TORN.EX.M10X70 H.ZINCADO | 1 | | Q011369000 |
| 37 | CIERRE CUBA COMPL. 8 | 1 | GALVANIZADO | P616103000 |
| 38 | CIERRE COMPLETO | 1 | | P620516000 |

## LF-13

| | | | | |
|---|---|---|---|---|
| 1 | FRENTE CUBA COMPLETO 13 | 1 | AISI 304 | P626112000 |
| | FRENTE CUBA 13 | 1 | AISI 304 | |
| | PERNO SOL.M6X10 | 8 | AISI 304 | |
| | CALZO PUERTA 13 | 1 | AISI 304 | |
| | CODO PRESOSTATO | 1 | AISI 304 | |
| | REMACHE EXAGONAL M6 | 8 | ACERO BICROMATADO | |
| | REFUERZO FRENTE-CIERRE | 1 | AISI 304 | |
| 7 | CALZO BISAGRA | 4 | GALVANIZADO | P620521000 |
| 8 | BISAGRA PUERTA | 2 | AISI 304 | P620502000 |
| 9 | ARANDELA A6 | 8 | AISI 304 | Q232040000 |
| 10 | TORN. ALLEN M6x25 | 8 | AISI 304 | Q122045000 |
| 11 | CAMARA PRESOSTATO | 1 | | P445002000 |
| 12 | | | | |
| 13 | CONDUCTO PRESOSTATO | 1 | Etileno propileno | P620711000 |
| 14 | ABRAZADERA 32-50L | 2 | | Q881306000 |
| 15 | PUERTA 13,18 | 1 | L-2640 | P620503000 |
| 16 | JUNTA PUERTA 1003373 | 1 | | P530502000 |
| 17 | MIRILLA PUERTA | 1 | | P530503000 |
| 18 | MANETA PUERTA 8,13,18 | 1 | L-2640 | P620504000 |
| 19 | PASADOR CIERRE | 2 | AISI 303 | P620511000 |
| 20 | MUELLE CIERRE | 1 | ACERO RESORTES | P620510000 |
| 21 | GANCHO REGULABLE CIERRE | 1 | AISI 304 | P620505000 |
| 22 | ARANDELA A5 | 2 | AISI 304 | Q232030000 |
| 23 | ARAND.ABAN. A5 A.304 | 2 | AISI 304 | Q242030000 |
| 24 | TORN.EXA. M5X15 A.304 | 2 | | Q012032000 |
| 25 | ARANDELA SEGURIDAD 4 | 4 | ACERO INOX. | Q272020000 |
| 26 | ANILLO SEG. A6 DIN471 | 1 | INOXIDABLE | Q302061000 |
| 27 | CASQUILLO PUERTA | 1 | ERTALYTE | P610506000 |
| 28 | TAPA CIERRE 13,18 | 1 | GALVANIZADO | P620512000 |
| 29 | TORN.ALOM.M4X10 | 4 | | Q032021000 |
| 30 | PASADOR PUERTA | 2 | AISI 303 | P620514000 |
| 31 | FONDO PUERTA 13,18 | 1 | AISI 304 | P620501000 |
| 32 | EMBELLECEDOR CIERRE | 1 | POLIAMIDA 6.6 | P620515000 |
| 33 | TORNILLO ALOMADO M5x15 | 6 | AISI 304 | Q032032000 |
| 34 | TUE.EX.AUT.M10 8.8 ZIN | 1 | | Q221306000 |
| 35 | ARANDELA A10 | 1 | | Q232060000 |
| 36 | TORN.EX.M10X70 H.ZINCADO | 1 | | Q011369000 |
| 37 | CIERRE CUBA COMPL.13 | 1 | GALVANIZADO | P626118000 |
| 38 | CIERRE COMPLETO | 1 | | P620516000 |

## LF-18

| | | | | |
|---|---|---|---|---|
| 1 | FRENTE CUBA 18 | 1 | AISI 304 | P636110000 |
| | FRENTE CUBA 18 | 1 | AISI 304 | |
| | PERNO SOL.M6X10 | 8 | AISI 304 | |
| | CALZO PUERTA 13,18 | 1 | AISI 304 | |
| | CODO PRESOSTATO | 1 | AISI 304 | |
| | REMACHE EXAGONAL M6 | 8 | ACERO BICROMATADO | |
| | REFUERZO FRENTE-CIERRE | 1 | AISI 304 | |
| 7 | CALZO BISAGRA | 4 | GALVANIZADO | P620521000 |
| 8 | BISAGRA PUERTA | 2 | AISI 304 | P620502000 |
| 9 | ARANDELA A6 | 8 | AISI 304 | Q232040000 |
| 10 | TORN. ALLEN M6x25 | 8 | AISI 304 | Q122045000 |
| 11 | CAMARA PRESOSTATO | 1 | | P445002000 |
| 12 | | | | |
| 13 | CONDUCTO PRESOSTATO | 1 | Etileno propileno | P620711000 |
| 14 | ABRAZADERA 32-50L | 2 | | Q881306000 |
| 15 | PUERTA 13,18 | 1 | L-2640 | P620503000 |
| 16 | JUNTA PUERTA 1003373 | 1 | | P530502000 |
| 17 | MIRILLA DE PUERTA | 1 | | P530503000 |
| 18 | MANETA PUERTA 8,13,18 | 1 | L-2640 | P620504000 |
| 19 | PASADOR CIERRE | 2 | AISI 303 | P620511000 |
| 20 | MUELLE CIERRE | 1 | ACERO RESORTES | P620510000 |
| 21 | GANCHO REGULABLE CIERRE | 1 | AISI 304 | P620505000 |
| 22 | ARANDELA A5 | 2 | AISI 304 | Q232030000 |
| 23 | ARAND.ABAN. A5 A.304 | 2 | AISI 304 | Q242030000 |
| 24 | TORN.EXA. M5X15 A.304 | 2 | | Q012032000 |
| 25 | ARANDELA SEGURIDAD 4 | 4 | ACERO INOX. | Q272020000 |
| 26 | ANILLO SEG. A6 DIN471 | 1 | INOXIDABLE | Q302061000 |
| 27 | CASQUILLO PUERTA | 1 | ERTALYTE | P610506000 |
| 28 | TAPA CIERRE 13,18 | 1 | GALVANIZADO | P620512000 |
| 29 | TORN.ALOM.M4X10 | 4 | | Q032021000 |
| 30 | PASADOR PUERTA | 2 | AISI 303 | P620514000 |
| 31 | FONDO PUERTA 13,18 | 1 | AISI 304 | P620501000 |
| 32 | EMBELLECEDOR CIERRE | 1 | POLIAMIDA 6.6 | P620515000 |
| 33 | TORNILLO ALOMADO M5x15 | 6 | AISI 304 | Q032032000 |
| 34 | TUE.EX.AUT.M10 8.8 ZIN | 1 | | Q221306000 |
| 35 | ARANDELA A10 | 1 | | Q232060000 |
| 36 | TORN.EX.M10X70 H.ZINCADO | 1 | | Q011369000 |
| 37 | CIERRE CUBA COMPL. 18 | 1 | GALVANIZADO | P636112000 |
| 38 | CIERRE COMPLETO | 1 | | P620516000 |

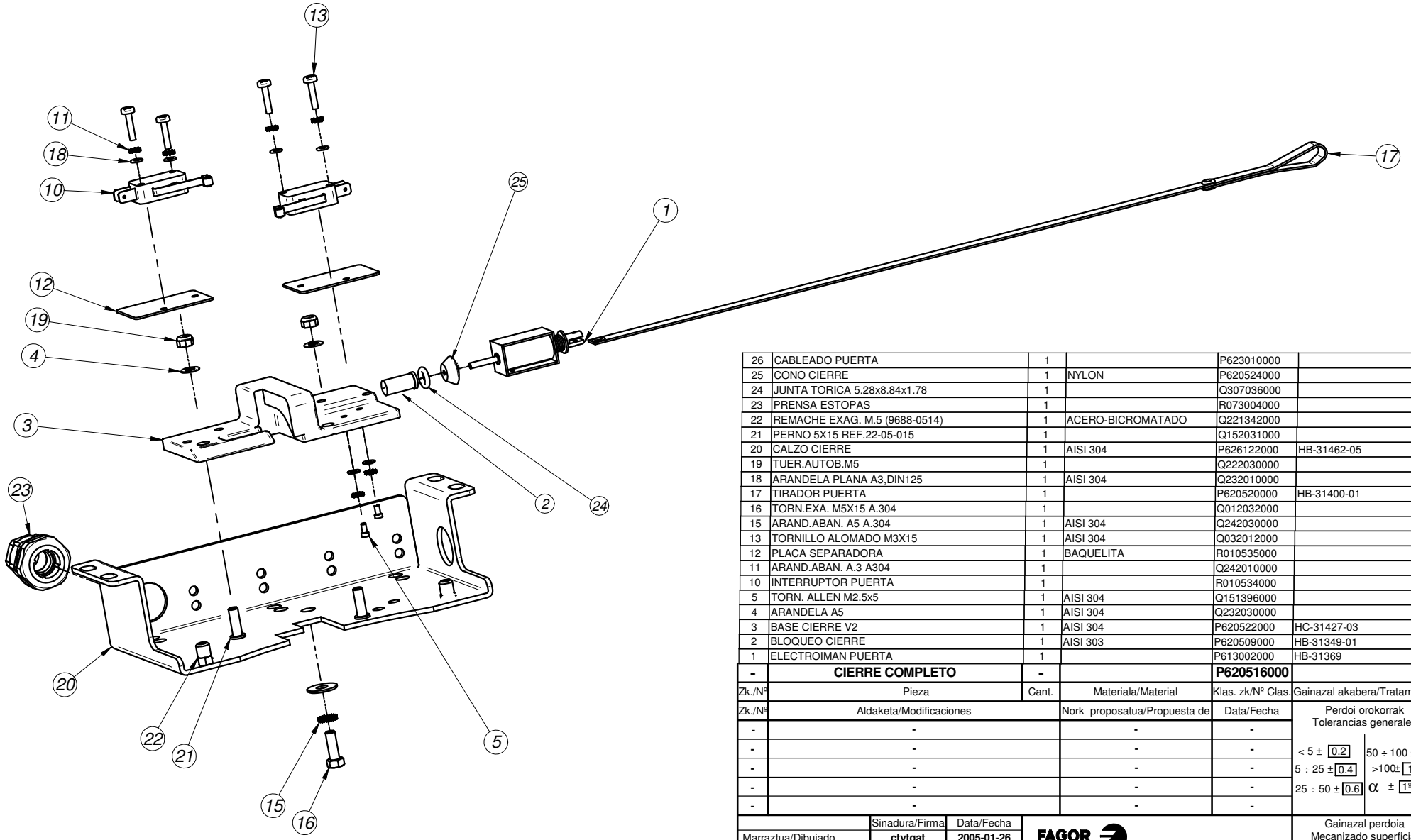


| | | | | | |
|---|---|---|---|---|---|
| 26 | CABLEADO PUERTA | 1 | | P623010000 | |
| 25 | CONO CIERRE | 1 | NYLON | P620524000 | |
| 24 | JUNTA TORICA 5.28x8.84x1.78 | 1 | | Q307036000 | |
| 23 | PRENSA ESTOPAS | 1 | | R073004000 | |
| 22 | REMACHE EXAG. M.5 (9688-0514) | 1 | ACERO-BICROMATADO | Q221342000 | |
| 21 | PERNO 5X15 REF.22-05-015 | 1 | | Q152031000 | |
| 20 | CALZO CIERRE | 1 | AISI 304 | P626122000 | HB-31462-05 |
| 19 | TUER.AUTOB.M5 | 1 | | Q222030000 | |
| 18 | ARANDELA PLANA A3,DIN125 | 1 | AISI 304 | Q232010000 | |
| 17 | TIRADOR PUERTA | 1 | | P620520000 | HB-31400-01 |
| 16 | TORN.EXA. M5X15 A.304 | 1 | | Q012032000 | |
| 15 | ARAND.ABAN. A5 A.304 | 1 | AISI 304 | Q242030000 | |
| 13 | TORNILLO ALOMADO M3X15 | 1 | AISI 304 | Q032012000 | |
| 12 | PLACA SEPARADORA | 1 | BAQUELITA | R010535000 | |
| 11 | ARAND.ABAN. A.3 A304 | 1 | | Q242010000 | |
| 10 | INTERRUPTOR PUERTA | 1 | | R010534000 | |
| 5 | TORN. ALLEN M2.5x5 | 1 | AISI 304 | Q151396000 | |
| 4 | ARANDELA A5 | 1 | AISI 304 | Q232030000 | |
| 3 | BASE CIERRE V2 | 1 | AISI 304 | P620522000 | HC-31427-03 |
| 2 | BLOQUEO CIERRE | 1 | AISI 303 | P620509000 | HB-31349-01 |
| 1 | ELECTROIMAN PUERTA | 1 | | P613002000 | HB-31369 |
| **-** | **CIERRE COMPLETO** | **-** | | **P620516000** | |

| Zk./Nº | Pieza | Cant. | Materiala/Material | Klas. zk/Nº Clas. | Gainazal akabera/Tratamiento |
|---|---|---|---|---|---|

| Zk./Nº | Aldaketa/Modificaciones | Nork proposatua/Propuesta de | Data/Fecha |
|---|---|---|---|
| - | - | - | - |
| - | - | - | - |
| - | - | - | - |
| - | - | - | - |
| - | - | - | - |

Perdoi orokorrak
Tolerancias generales

< 5 ± 0.2 | 50 ÷ 100 ± 0.8
5 ÷ 25 ± 0.4 | >100± 1
25 ÷ 50 ± 0.6 | α ± 1º

| | Sinadura/Firma | Data/Fecha |
|---|---|---|
| Marraztua/Dibujado | **ctytgat** | **2005-01-26** |
| Proiektatua/Proyectado | **ctytgat** | **2005-01-26** |
| Egiaztatua/Comprobado | | **2005-02-10** |

FAGOR

Fagor Industrial,Koop.Elk, Mugatua

Gainazal perdoia
Mecanizado superficial

—

Eskala/Escala

**1:2**

**-**

Plano Zk./Plano Nº

HC-31445

- Zk. ord. du

- Zk.gaitik ord.

Plano hau ezin daiteke erabili, ez berriztatu, gure baimenik gabe.

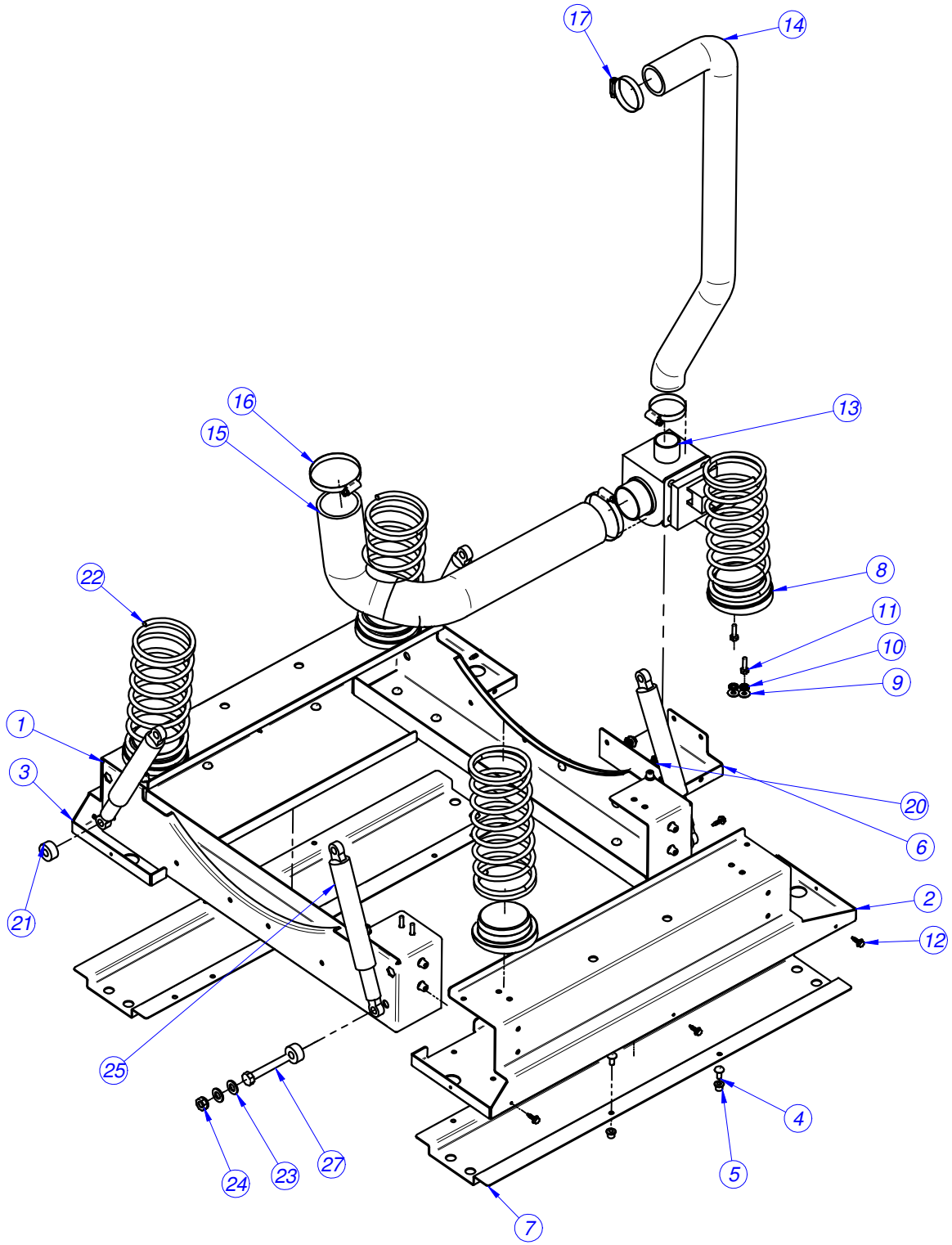
17
14
16
15
13
22
8
11
10
9
1
3
20
6
21
2
12
25
4
5
24
23
27
7

## LF-8

| | | | | |
|---|---|---|---|---|
| 1 | ARMAZON COMPLETO 8 | | | P610104000 |
| | TRAVESAÑO ARMAZON 8 | 2 | GALVANIZED STEEL | |
| | LATERAL DER. ARMAZON 8 | 1 | GALVANIZADO | |
| | LATERAL IZQ. ARMAZON 8 | 1 | GALVANIZADO | |
| | REMACHE MAXLOK 6.4 | 27 | | |
| | COLLAR MAXLOK 6.4 | 27 | | |
| | SOPORTE VÁLVULA DESAGÜE 8 | 1 | GALVANIZADO | |
| | BASE LAVADORA 8 | 2 | GALVANIZADO | |
| 8 | BASE MUELLE | 4 | ALUMINIO | P620106000 |
| 9 | ARANDELA 16X6X1.2 A.304 | 12 | AISI 304 | Q302022000 |
| 10 | ARAND.ABAN. A6 A.304 | 8 | AISI 304 | Q242040000 |
| 11 | TORN.EXA. M6X20 A.304 | 8 | AISI 304 | Q012043000 |
| 12 | TORN.BROCA 4,8X16 | 8 | | Q151323000 |
| 13 | VALVULA | 1 | | P302120000 |
| 14 | CONDUCTO REBOSADERO 8 | 1 | E.P.D.M | P610702000 |
| 15 | CONDUCTO DESAGUE 8 | 1 | E.D.P.M | P610703000 |
| 16 | ABRAZADERA 50-70L | 2 | | Q881324000 |
| 17 | ABRAZADERA 32-50L | 2 | | Q881306000 |
| 18 | ARAND.ABAN. A5 A.304 | 4 | AISI 304 | Q242030000 |
| 19 | TORN.EXA. M5X15 A.304 | 2 | | Q012032000 |
| 20 | TUE.EX.AUT.M5 H.ZINCADA | 2 | H.ZINCADO | Q221308000 |
| 21 | CASQUILLO AMORTIGUADORES | 4 | F-111 | P620107000 |
| 22 | MUELLE 8 | 4 | ACERO RESORTES | P610105000 |
| 23 | ARANDELA A10 | 16 | | Q012032000 |
| 24 | TUE.EX.AUT.M10 H.ZINCADA | 8 | H.ZINCADO | Q221306000 |
| 25 | AMORTIGUADOR 120N | 4 | | P620115000 |
| 27 | TORN.EX. M10x70 H.ZINCADO | 8 | H.ZINCADO | Q011369000 |

## LF-13

| | | | | |
|---|---|---|---|---|
| 1 | ARMAZON COMPLETO 13 | | | P620104000 |
| | TRAVESAÑO ARMAZON 13 | 2 | GALVANIZED STEEL | |
| | LATERAL DER. ARMAZON 13 | 1 | GALVANIZADO | |
| | LATERAL IZQ. ARMAZON 13 | 1 | GALVANIZADO | |
| | REMACHE MAXLOK 6.4 | 27 | | |
| | COLLAR MAXLOK 6.4 | 27 | | |
| | SOPORTE VÁLVULA DESAGÜE 8 | 1 | GALVANIZADO | |
| | BASE LAVADORA 13 | 2 | GALVANIZADO | |
| 8 | BASE MUELLE | 4 | ALUMINIO | P620106000 |
| 9 | ARANDELA 16X6X1.2 A.304 | 12 | AISI 304 | Q302022000 |
| 10 | ARAND.ABAN. A6 A.304 | 8 | AISI 304 | Q242040000 |
| 11 | TORN.EXA. M6X20 A.304 | 8 | AISI 304 | Q012043000 |
| 12 | TORN.BROCA 4,8X16 | 8 | | Q151323000 |
| 13 | VALVULA | 1 | | P302120000 |
| 14 | CONDUCTO REBOSADERO 13 | 1 | E.P.D.M | P620704000 |
| 15 | CONDUCTO DESAGUE 13 | 1 | E.D.P.M | P620703000 |
| 16 | ABRAZADERA 50-70L | 2 | | Q881324000 |
| 17 | ABRAZADERA 32-50L | 2 | | Q881306000 |
| 18 | ARAND.ABAN. A5 A.304 | 4 | AISI 304 | Q242030000 |
| 19 | TORN.EXA. M5X15 A.304 | 2 | | Q012032000 |
| 20 | TUE.EX.AUT.M5 H.ZINCADA | 2 | H.ZINCADO | Q221308000 |
| 21 | CASQUILLO AMORTIGUADORES | 4 | F-111 | P620107000 |
| 22 | MUELLE 13 | 4 | ACERO RESORTES | P620105000 |
| 23 | ARANDELA A10 | 16 | | Q012032000 |
| 24 | TUE.EX.AUT.M10 H.ZINCADA | 8 | H.ZINCADO | Q221306000 |
| 25 | AMORTIGUADOR 120N | 4 | | P620115000 |
| 27 | TORN.EX. M10x70 H.ZINCADO | 8 | H.ZINCADO | Q011369000 |

## LF-18

| | | | | |
|---|---|---|---|---|
| 1 | ARMAZON COMPLETO 18 | | | P630104000 |
| | TRAVESAÑO ARMAZON 18 | 2 | GALVANIZED STEEL | |
| | LATERAL DER. ARMAZON 18 | 1 | GALVANIZADO | |
| | LATERAL IZQ. ARMAZON 18 | 1 | GALVANIZADO | |
| | REMACHE MAXLOK 6.4 | 27 | | |
| | COLLAR MAXLOK 6.4 | 27 | | |
| | SOPORTE VÁLVULA DESAGÜE 8 | 1 | GALVANIZADO | |
| | BASE LAVADORA 18 | 2 | GALVANIZADO | |
| 8 | BASE MUELLE | 4 | ALUMINIO | P620106000 |
| 9 | ARANDELA 16X6X1.2 A.304 | 12 | AISI 304 | Q302022000 |
| 10 | ARAND.ABAN. A6 A.304 | 8 | AISI 304 | Q242040000 |
| 11 | TORN.EXA. M6X20 A.304 | 8 | AISI 304 | Q012043000 |
| 12 | TORN.BROCA 4,8X16 | 8 | | Q151323000 |
| 13 | VALVULA | 1 | | P302120000 |
| 14 | CONDUCTO REBOSADERO 8 | 1 | E.P.D.M | P610702000 |
| 15 | CONDUCTO DESAGUE 8 | 1 | E.D.P.M | P610703000 |
| 16 | ABRAZADERA 50-70L | 2 | | Q881324000 |
| 17 | ABRAZADERA 32-50L | 2 | | Q881306000 |
| 18 | ARAND.ABAN. A5 A.304 | 4 | AISI 304 | Q242030000 |
| 19 | TORN.EXA. M5X15 A.304 | 2 | | Q012032000 |
| 20 | TUE.EX.AUT.M5 H.ZINCADA | 2 | H.ZINCADO | Q221308000 |
| 21 | CASQUILLO AMORTIGUADORES | 4 | F-111 | P620107000 |
| 22 | MUELLE 18 | 4 | ACERO RESORTES | P630106000 |
| 23 | ARANDELA A10 | 16 | | Q012032000 |
| 24 | TUE.EX.AUT.M10 H.ZINCADA | 8 | H.ZINCADO | Q221306000 |
| 25 | AMORTIGUADOR 250N | 4 | | P630110000 |
| 27 | TORN.EX. M10x70 H.ZINCADO | 8 | H.ZINCADO | Q011369000 |

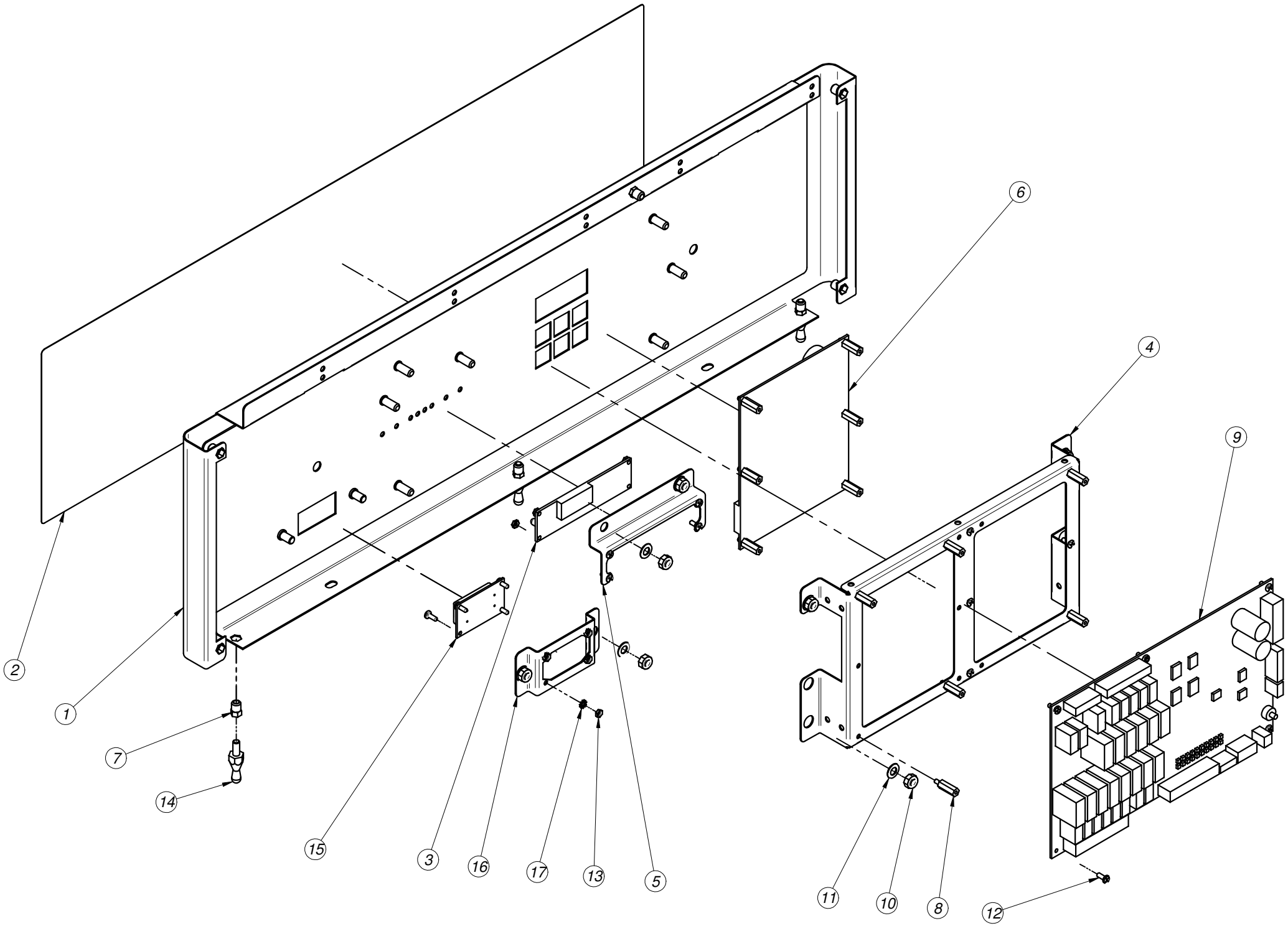
2
1
7
14
15
3
16
17
13
5
6
4
9
11
10
8
12

| | **CONJUNTO PORTAMANDOS 8 M** | | | |
|---|---|---|---|---|
| 1 | PORTA MANDOS COMP. 8 M | 1 | | P610332000 |
| 2 | ADHESIVO PORTAMANDOS MPP | 1 | | P610319000 |
| 3 | PLACA LEDS | 1 | | P623023000 |
| 4 | SOPORTE PROGRAMADOR M | 1 | AISI 430 | P620355000 |
| 5 | SOPORTE PLACA LEDS | 1 | AISI 430 | P620356000 |
| 6 | CIRCUITO VISUALIZACION M | 1 | | P613018000 |
| 7 | REMACHE EXAG. M.5 (9688-0514) | 8 | ACERO-BICROM. | Q221342000 |
| 8 | DISTANCIADOR M3 | 12 | | T133007000 |
| 9 | PLACA ENTRADAS-SALIDAS M | 1 | | P613019000 |
| 10 | TUER.AUTOB.M6 | 6 | | Q222012000 |
| 11 | ARANDELA A6 | 6 | AISI 304 | Q232040000 |
| 12 | TORNILLO AMARRE M3 | 14 | | T133008000 |
| 13 | TUER.EXA.M3 | 4 | | Q162010000 |
| 14 | PITON CIERRE | 7 | ACERO F-114 | X012612000 |
| 15 | INTERRUPTOR GENERAL C.I. | 1 | | P623017000 |
| 16 | PORTA INTERRUPTOR C.I. | 1 | AISI 304 | P620338000 |
| 17 | ARAND. ABAN. A.3 | 4 | | Q242010000 |

| | **CONJUNTO PORTAMANDOS 13 M** | | | |
|---|---|---|---|---|
| 1 | PORTA MANDOS COMP. 8 M | 1 | | P620348000 |
| 2 | ADHESIVO PORTAMANDOS MPP | 1 | | P610319000 |
| 3 | PLACA LEDS | 1 | | P623023000 |
| 4 | SOPORTE PROGRAMADOR M | 1 | AISI 430 | P620355000 |
| 5 | SOPORTE PLACA LEDS | 1 | AISI 430 | P620356000 |
| 6 | CIRCUITO VISUALIZACION M | 1 | | P613018000 |
| 7 | REMACHE EXAG. M.5 (9688-0514) | 8 | ACERO-BICROM. | Q221342000 |
| 8 | DISTANCIADOR M3 | 12 | | T133007000 |
| 9 | PLACA ENTRADAS-SALIDAS M | 1 | | P613019000 |
| 10 | TUER.AUTOB.M6 | 6 | | Q222012000 |
| 11 | ARANDELA A6 | 6 | AISI 304 | Q232040000 |
| 12 | TORNILLO AMARRE M3 | 14 | | T133008000 |
| 13 | TUER.EXA.M3 | 4 | | Q162010000 |
| 14 | PITON CIERRE | 7 | ACERO F-114 | X012612000 |
| 15 | INTERRUPTOR GENERAL C.I. | 1 | | P623017000 |
| 16 | PORTA INTERRUPTOR C.I. | 1 | AISI 304 | P620338000 |
| 17 | ARAND. ABAN. A.3 | 4 | | Q242010000 |

| | **CONJUNTO PORTAMANDOS 8 M** | | | |
|---|---|---|---|---|
| 1 | PORTA MANDOS COMP. 8 M | 1 | | P630324000 |
| 2 | ADHESIVO PORTAMANDOS MPP | 1 | | P610319000 |
| 3 | PLACA LEDS | 1 | | P623023000 |
| 4 | SOPORTE PROGRAMADOR M | 1 | AISI 430 | P620355000 |
| 5 | SOPORTE PLACA LEDS | 1 | AISI 430 | P620356000 |
| 6 | CIRCUITO VISUALIZACION M | 1 | | P613018000 |
| 7 | REMACHE EXAG. M.5 (9688-0514) | 8 | ACERO-BICROM. | Q221342000 |
| 8 | DISTANCIADOR M3 | 12 | | T133007000 |
| 9 | PLACA ENTRADAS-SALIDAS M | 1 | | P613019000 |
| 10 | TUER.AUTOB.M6 | 6 | | Q222012000 |
| 11 | ARANDELA A6 | 6 | AISI 304 | Q232040000 |
| 12 | TORNILLO AMARRE M3 | 14 | | T133008000 |
| 13 | TUER.EXA.M3 | 4 | | Q162010000 |
| 14 | PITON CIERRE | 7 | ACERO F-114 | X012612000 |
| 15 | INTERRUPTOR GENERAL C.I. | 1 | | P623017000 |
| 16 | PORTA INTERRUPTOR C.I. | 1 | AISI 304 | P620338000 |
| 17 | ARAND. ABAN. A.3 | 4 | | Q242010000 |

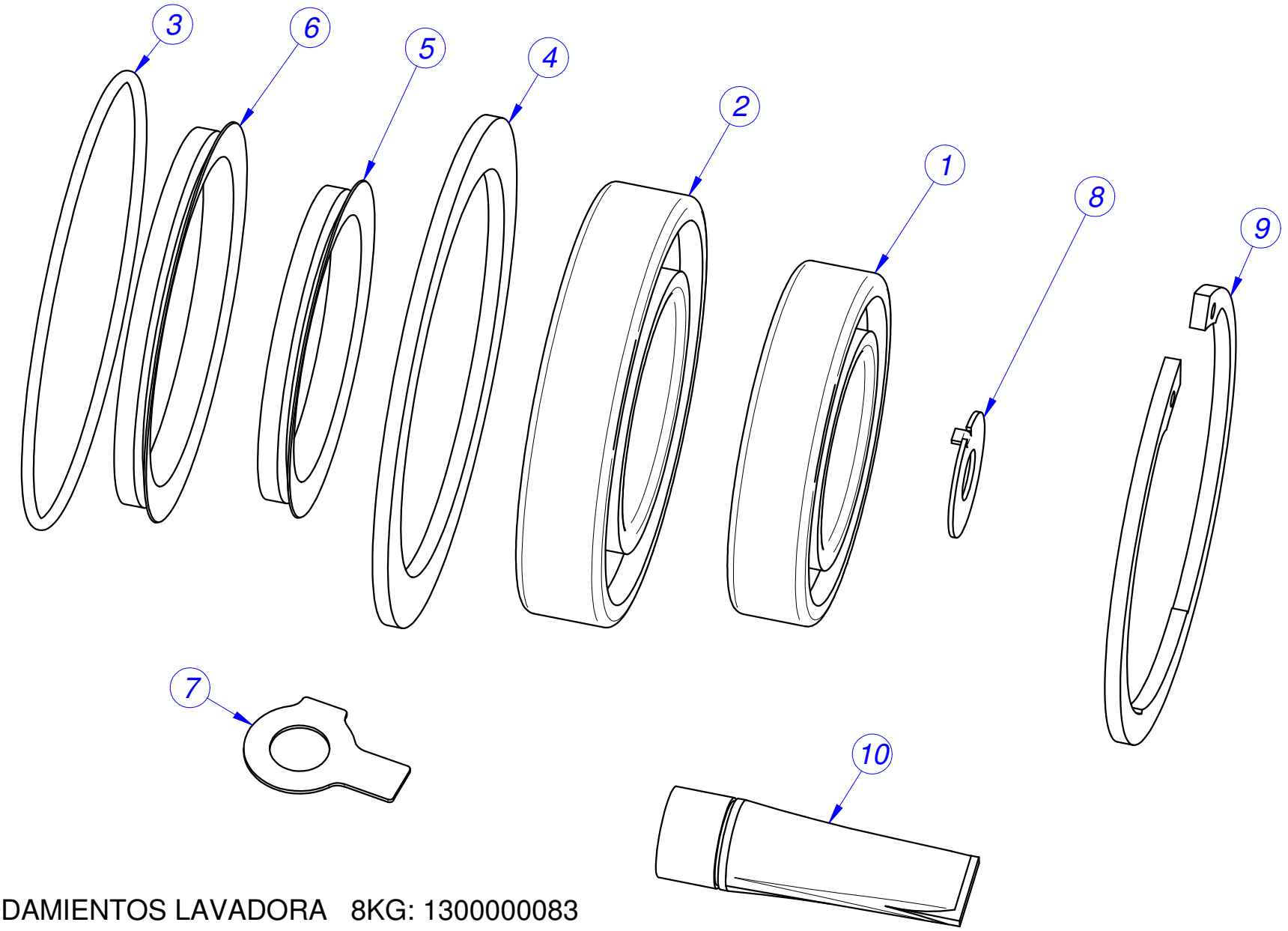


KIT RODAMIENTOS LAVADORA 8KG: 1300000083

KIT RODAMIENTOS LAVADORA 13KG: 1300000084

KIT RODAMIENTOS LAVADORA 18KG: 1300000085

## KIT RODAMIENTOS 8 KG
# REF: 1300000083

| *Nº COMPONENTES QUE INCLUYE EL KIT 1300000083* | *DENOMINACIÓN DE COMPONENTES QUE INCLUYE EL KIT 1300000083* | *CODIGO* | *CANTIDAD* |
|---|---|---|---|
| *Componente nº1* | *Rodamiento 55/100/21* | *P616009* | *1* |
| *Componente nº2* | *Rodamiento 45/85/19* | *P616008* | *1* |
| *Componente nº3* | *Junta tórica 102x3* | *Q307073* | *1* |
| *Componente nº4* | *Junta casquillo retenes 8* | *P616007* | *1* |
| *Componente nº5* | *Retén V-RING 63* | *P614911* | *1* |
| *Componente nº6* | *Retén V-RING 78* | *P634911* | *1* |
| *Componente nº7* | *Arandela de seguridad 13* | *Q271302* | *8* |
| *Componente nº8* | *Arandela de seguridad 13* | *Q301329* | *1* |
| *Componente nº9* | *Anillo seguridad int. 85* | *Q301044* | *1* |
| *Componente nº10* | *Grasa amblygon TA 15/2* | *P536544* | *1* |

---

## KIT RODAMIENTOS 13 KG
# REF: 1300000084

| *Nº COMPONENTES QUE INCLUYE EL KIT 1300000084* | *DENOMINACIÓN DE COMPONENTES QUE INCLUYE EL KIT 1300000084* | *CODIGO* | *CANTIDAD* |
|---|---|---|---|
| *Componente nº1* | *Rodamiento 50/90/20* | *P626008* | *1* |
| *Componente nº2* | *Rodamiento 60/110/22* | *P626009* | *1* |
| *Componente nº3* | *Junta tórica 114x3* | *Q307075* | *1* |
| *Componente nº4* | *Junta casquillo retenes 13* | *P626007* | *1* |
| *Componente nº5* | *Retén V-RING 70* | *P624913* | *1* |
| *Componente nº6* | *Retén V-RING 85* | *P624914* | *1* |
| *Componente nº7* | *Arandela de seguridad 13* | *Q271302* | *8* |
| *Componente nº7* | *Arandela de seguridad 15* | *Q271303* | *8* |
| *Componente nº8* | *Arandela de seguridad 13* | *Q301329* | *1* |
| *Componente nº9* | *Anillo seguridad int. 90* | *Q301030* | *1* |
| *Componente nº10* | *Grasa amblygon TA 15/2* | *P536544* | *1* |

---

## KIT RODAMIENTOS 18 KG
# REF: 1300000085

| *Nº COMPONENTES QUE INCLUYE EL KIT 1300000085* | *DENOMINACIÓN DE COMPONENTES QUE INCLUYE EL KIT 1300000085* | *CODIGO* | *CANTIDAD* |
|---|---|---|---|
| *Componente nº1* | *Rodamiento 60/110/22* | *P626009* | *1* |
| *Componente nº2* | *Rodamiento 70/125/24* | *P626008* | *1* |
| *Componente nº3* | *Junta tórica 128x3* | *Q307077* | *1* |
| *Componente nº4* | *Junta casquillo retenes 18* | *P636005* | *1* |
| *Componente nº5* | *Retén V-RING 78* | *P634911* | *1* |
| *Componente nº6* | *Retén V-RING 92* | *P634912* | *1* |
| *Componente nº7* | *Arandela de seguridad 15* | *Q271303* | *8* |
| *Componente nº8* | *Arandela de seguridad 13* | *Q301329* | *1* |
| *Componente nº9* | *Anillo seguridad J110x4* | *Q301036* | *1* |
| *Componente nº10* | *Grasa amblygon TA 15/2* | *P536544* | *1* |

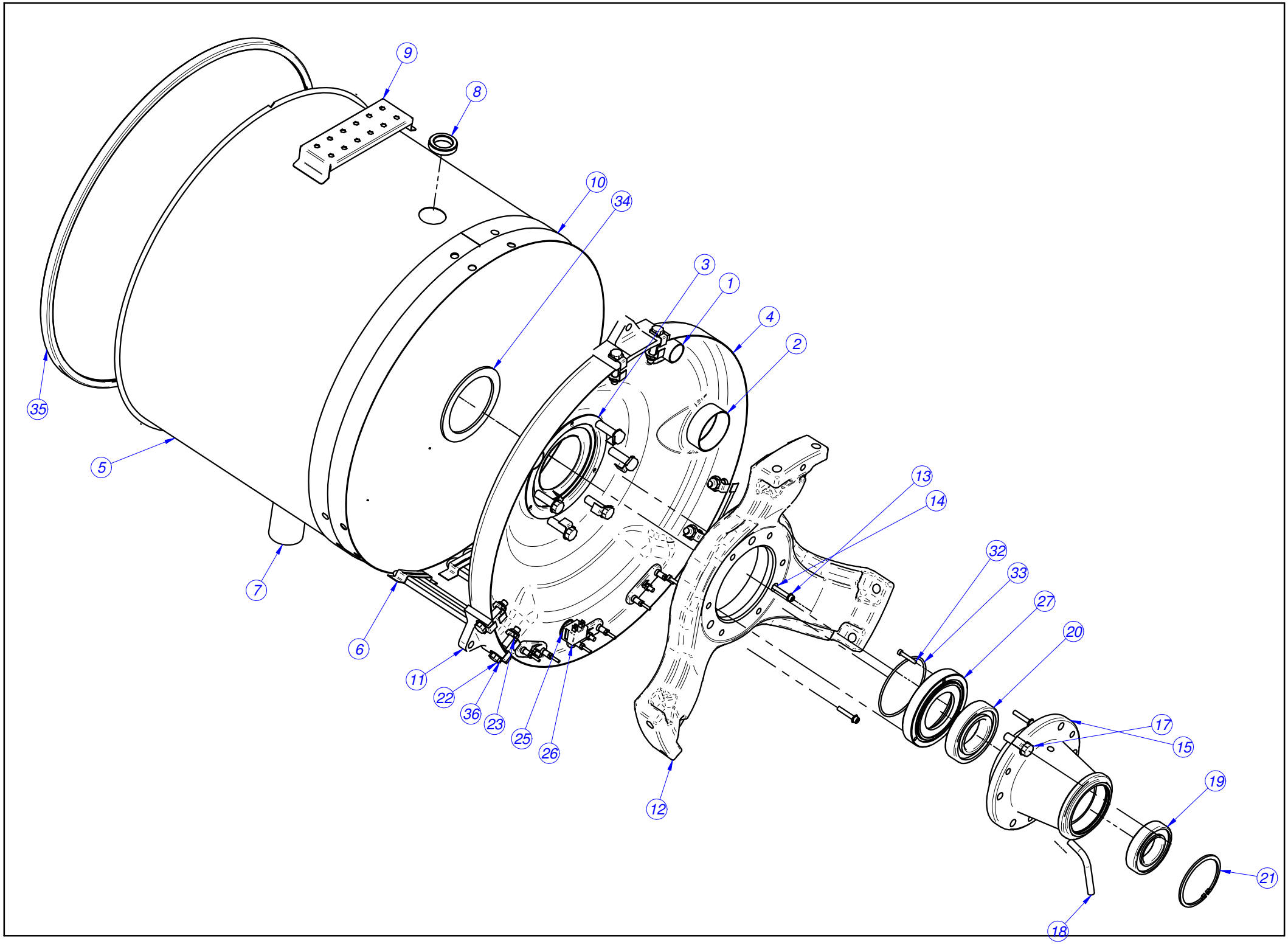
9
8
10
34
3
1
4
2
35
5
13
14
32
33
27
20
7
6
11
22
36
23
25
26
12
17
15
19
21
18

# LF-8

| 1 | CUBA COMPLETA 8 | | | P616111000 |
|---|---|---|---|---|
| | TOMA VAPOR/REBOSADERO | 2 | AISI 304 | |
| | ENTRADA DE AGUA | 1 | AISI 304 | |
| | AMARRE FONDO CUBA | 1 | AISI 304 | |
| | FONDO CUBA 8 | 1 | AISI 304 | |
| | ENVOLVENTE CUBA 8 | 1 | AISI 304 | |
| | RETEN DE RESISTENCIAS LATERAL | 3 | AISI 304 | |
| | TUBO DESAGÜE | 1 | AISI 304 | |
| | CASQUILLO DESAGÜE | 1 | AISI 304 | |
| | BASE PORTA IMAN | 1 | AISI 304 | |
| | ANILLO CUBA 8 | 1 | AISI 304 | |
| 11 | APOYO TORNILLOS 8 | 3 | F-1130 | P616011000 |
| 12 | REFUERZO FONDO CUBA 8 | 1 | ALUMINIO L2620/ EN AC-45000 | P616003000 |
| 13 | ARANDELA A6 | 3 | AISI 304 | Q232040000 |
| 14 | TORN. ALLEN M6x35 INOX | 3 | AISI 304 | Q122045000 |
| 15 | SOPORTE RODAMIENTOS 8 | 1 | GG-25 | P616004000 |
| 16 | ARAND 27X12,5X2,5HIER | 6 | | Q301010000 |
| 17 | TORN. EXAG. M12x40 INOX | 6 | AISI 304 10.9 | Q151528000 |
| 18 | TUBO EVACUACION 8,13,18 | 1 | COBRE | P626015000 |
| 19 | RODAMIENTO 45/85/19 | 1 | | P616008000 |
| 20 | RODAMIENTO 55/100/21 | 1 | | P616009000 |
| 21 | ANILLO SEG. INT. 85 | 1 | HIERRO | Q301044000 |
| 22 | TORN. EXAG. M12x55 DIN 931 | 6 | HIERRO | Q151529000 |
| 23 | TUE.EX.AUT.M12 8.8 ZIN | 6 | | Q221307000 |
| 25 | PASAMUROS BULBO | 1 | GOMA NEGRA | Z953003000 |
| 26 | SONDA | 1 | | P503025000 |
| 27 | CASQUILLO CONTRA RETEN 8 | 1 | AISI 304 | P616005000 |
| 32 | TORN. ALLEN M5x30 INOX | 3 | AISI 304 | Q122034000 |
| 33 | JUNTA TOR. 102x3 | 1 | NBR 80 SHORE A | Q307073000 |
| 34 | JUNTA CASQUILLO RETENES 8 | 1 | E.P.D.M | P616007000 |
| 35 | JUNTA CUBA 8 | 1 | E.P.D.M. | P616104000 |
| 36 | ARAND. SEG.13 DIN 463 | 12 | BURDINA | Q271302000 |

# LF-13

| 1 | CUBA COMPLETA 13 | | | P626115000 |
|---|---|---|---|---|
| | TOMA VAPOR/REBOSADERO | 2 | AISI 304 | |
| | ENTRADA DE AGUA | 1 | AISI 304 | |
| | AMARRE FONDO CUBA 13 | 1 | AISI 304 | |
| | FONDO CUBA 13 | 1 | AISI 304 | |
| | ENVOLVENTE CUBA 13 | 1 | AISI 304 | |
| | RETEN DE RESISTENCIAS LATERAL | 3 | AISI 304 | |
| | TUBO DESAGÜE | 1 | AISI 304 | |
| | CASQUILLO DESAGÜE | 1 | AISI 304 | |
| | BASE PORTA IMAN | 1 | AISI 304 | |
| | ANILLO CUBA 13 COMPLETO | 1 | AISI 304 | |
| 11 | APOYO TORNILLOS 13 | 3 | F-1130 | P626014000 |
| 12 | REFUERZO FONDO CUBA 13 | 1 | ALUMINIO L2620/ EN AC-45000 | P626001000 |
| 13 | ARANDELA A6 | 3 | AISI 304 | Q232040000 |
| 14 | TORN. ALLEN M6x35 INOX | 3 | AISI 304 | Q122045000 |
| 15 | SOPORTE RODAMIENTOS 13 | 1 | GG-25 | P626002000 |
| 16 | ARAND 27X12,5X2,5HIER | 6 | | Q301010000 |
| 17 | TORN. EXAG. M12x40 INOX | 6 | AISI 304 10.9 | Q151528000 |
| 18 | TUBO EVACUACION 8,13,18 | 1 | COBRE | P626015000 |
| 19 | RODAMIENTO 50/90/20 | 1 | | P626008000 |
| 20 | RODAMIENTO 55/100/21 | 1 | | P626009000 |
| 21 | ANILLO SEG. INT. 90 | 1 | HIERRO | Q301030000 |
| 22 | TORN. EXAG. M12x55 DIN 931 | 6 | HIERRO | Q151529000 |
| 23 | TUE.EX.AUT.M12 8.8 ZIN | 6 | | Q221307000 |
| 25 | PASAMUROS BULBO | 1 | GOMA NEGRA | Z953003000 |
| 26 | SONDA | 1 | | P503025000 |
| 27 | CASQUILLO CONTRA RETEN 13 | 1 | AISI 304 | P626003000 |
| 32 | TORN. ALLEN M5x30 INOX | 3 | AISI 304 | Q122034000 |
| 33 | JUNTA TOR. 114x3 | 1 | NBR 80 SHORE A | Q307075000 |
| 34 | JUNTA CASQUILLO RETENES 13 | 1 | E.P.D.M | P626007000 |
| 35 | JUNTA CUBA 13 | 1 | E.P.D.M. | P626110000 |
| 36 | ARAND. SEG.13 DIN 463 | 12 | BURDINA | Q271302000 |

# LF-18

| 1 | CUBA COMPLETA 18 | | | P636107000 |
|---|---|---|---|---|
| | TOMA VAPOR/REBOSADERO | 2 | AISI 304 | |
| | ENTRADA DE AGUA | 1 | AISI 304 | |
| | AMARRE FONDO CUBA 18 | 1 | AISI 304 | |
| | FONDO CUBA 18 | 1 | AISI 304 | |
| | ENVOLVENTE CUBA 8 | 1 | AISI 304 | |
| | RETEN DE RESISTENCIAS LATERAL | 3 | AISI 304 | |
| | TUBO DESAGÜE | 1 | AISI 304 | |
| | CASQUILLO DESAGÜE | 1 | AISI 304 | |
| | BASE PORTA IMAN | 1 | AISI 304 | |
| | ANILLO CUBA 18 COMPL. | 1 | AISI 304 | |
| 11 | APOYO TORNILLOS 18 | 3 | F-1130 | P636009000 |
| 12 | REFUERZO FONDO CUBA 18 | 1 | ALUMINIO L2620/ EN AC-45000 | P636001000 |
| 13 | ARANDELA A6 | 3 | AISI 304 | Q232040000 |
| 14 | TORN. ALLEN M6x35 INOX | 3 | AISI 304 | Q122045000 |
| 15 | SOPORTE RODAMIENTOS 18 | 1 | GG-25 | P636002000 |
| 16 | ARAND SEG. 15 DIN 463 | 6 | BURDINA | Q271303000 |
| 17 | TORN. EXAG. M14x7010.9 | 6 | HIERRO 10.9 | Q151535000 |
| 18 | TUBO EVACUACION 8,13,18 | 1 | COBRE | P626015000 |
| 19 | RODAMIENTO 60/110/22 | 1 | | P626009000 |
| 20 | RODAMIENTO 70/125/24 | 1 | | P636009000 |
| 21 | ANILLO SEG. J110x4 | 1 | HIERRO | Q301036000 |
| 22 | TORN. EXAG. M14x55 (12.9) DIN 931 | 6 | HIERRO | Q151589000 |
| 23 | TUE.EX.AUT.M14 8.8 ZIN | 6 | | Q221338000 |
| 25 | PASAMUROS BULBO | 1 | GOMA NEGRA | Z953003000 |
| 26 | SONDA | 1 | | P503025000 |
| 27 | CASQUILLO CONTRA RETEN 18 | 1 | AISI 304 | P636003000 |
| 32 | TORN. ALLEN M5x30 INOX | 3 | AISI 304 | Q122034000 |
| 33 | JUNTA TOR. 128x3 | 1 | NBR 80 SHORE A | Q307077000 |
| 34 | JUNTA CASQUILLO RETENES 18 | 1 | E.P.D.M | P636005000 |
| 35 | JUNTA CUBA 18 | 1 | E.P.D.M. | P636108000 |
| 36 | ARAND SEG. 15 DIN 463 | 12 | BURDINA | Q271303000 |

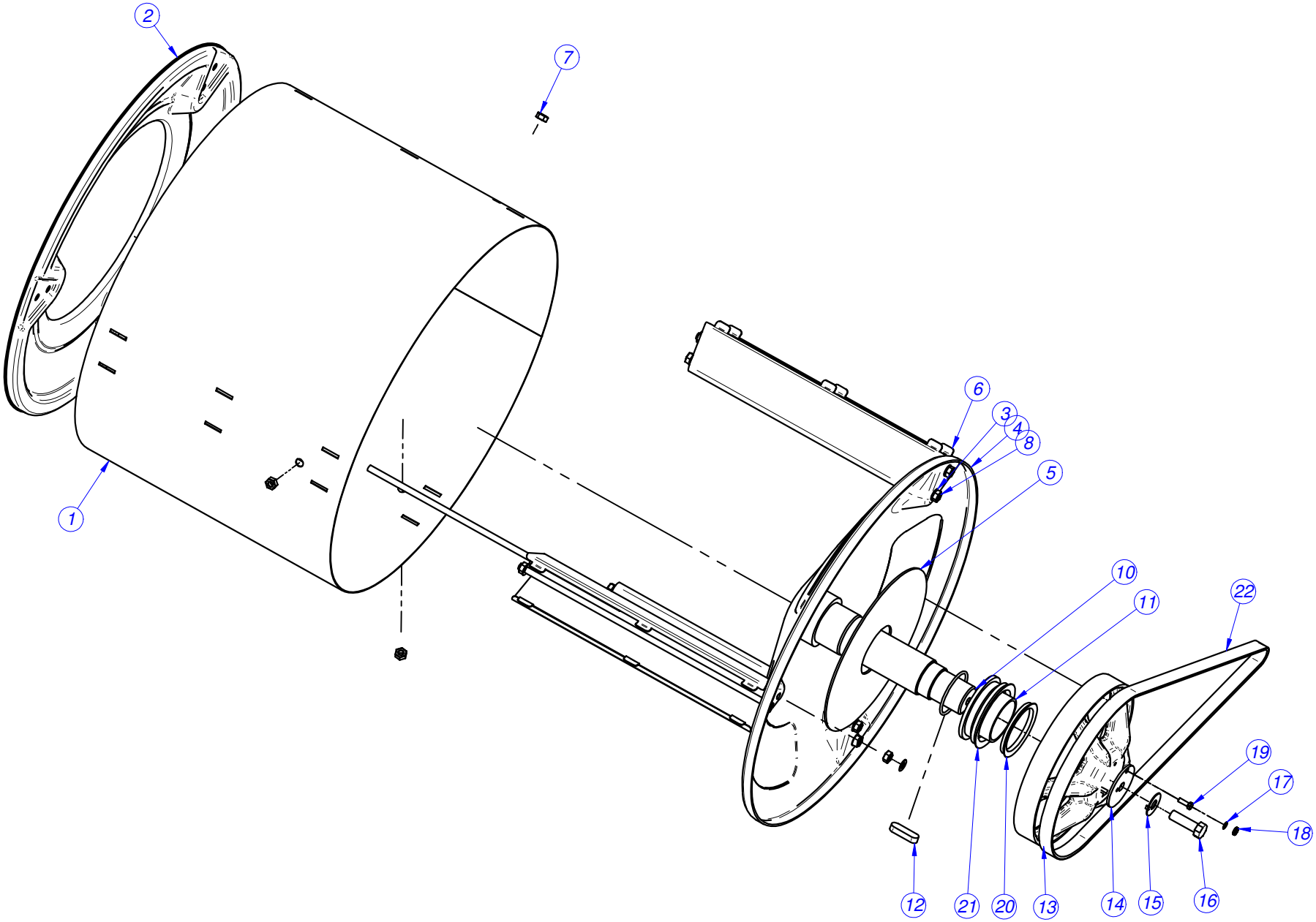
1
2
7
6
3
4
8
5
10
11
22
19
17
18
12
21
20
13
14
15
16

## LF-8

| | | | | |
|---|---|---|---|---|
| 1 | TAMBOR COMPLETO 8 | | | P614909000 |
| | ENVOLVENTE TAMBOR 8 | 1 | AISI 304 | |
| | FRENTE TAMBOR 8 | 1 | AISI 304 | |
| | ARANDELA A8 | 6 | AISI 304 | |
| | FONDO TAMBOR 8 | 1 | AISI 304 | |
| | REFUERZO FONDO TAMBOR 8 | 1 | AISI 304 | |
| | PALA 8 | 3 | AISI 304 | |
| | TUERCA EXAG. M8x1 INOX. | 9 | | |
| | VARILLA PALA 8 | 6 | AISI 303 | |
| | JUNTA TOR. 55x3 | 1 | NBR 80 SHORE A | |
| | EJE TAMBOR 8 | 1 | F-112 | |
| | CASQUILLO EN EJE 8 | 1 | AISI 304 | |
| 12 | CHAVETA 12x8x40 | 1 | | P614914000 |
| 13 | POLEA TAMBOR 8 | 1 | L-2620 | P616006000 |
| 14 | ARANDELA POLEA 8 | 1 | HIERRO | P616010000 |
| 15 | ARANDELA SEGURIDAD 13 | 1 | HIERRO ZINCADO | Q301329000 |
| 16 | TOR.EX.M12X40 H.ZINCADO | 1 | | Q011376000 |
| 17 | ARANDELA A5 | 1 | AISI 304 | Q232030000 |
| 18 | ARAND.ABAN. A5 A.304 | 1 | AISI 304 | Q242030000 |
| 19 | TORN.EXA. M5X15 A.304 | 1 | | Q012032000 |
| 20 | RETEN V-RING 65 | 1 | NITRILO | P614911000 |
| 21 | RETEN V-RING 80 | 1 | NITRILO | P614912000 |
| 22 | CORREA 8 | 1 | | P615902000 |

## LF-13

| | | | | |
|---|---|---|---|---|
| 1 | TAMBOR COMPLETO 13 | | | P624909000 |
| | ENVOLVENTE TAMBOR 13 | 1 | AISI 304 | |
| | FRENTE TAMBOR 13 | 1 | AISI 304 | |
| | ARANDELA A8 | 6 | AISI 304 | |
| | FONDO TAMBOR 13 | 1 | AISI 304 | |
| | REFUERZO FONDO TAMBOR 13 | 1 | AISI 304 | |
| | PALA 13 | 3 | AISI 304 | |
| | TUERCA EXAG. M8x1 INOX. | 9 | | |
| | VARILLA PALA 13 | 6 | AISI 303 | |
| | JUNTA TOR. 60x3 | 1 | NBR 80 SHORE A | |
| | EJE TAMBOR 13 | 1 | F-112 | |
| | CASQUILLO EN EJE 13 | 1 | AISI 304 | |
| 12 | CHAVETA 14x9x50 | 1 | | P626010000 |
| 13 | POLEA TAMBOR 13,18 | 1 | L-2620 | P626006000 |
| 14 | ARANDELA POLEA 13,18 | 1 | HIERRO | P626012000 |
| 15 | ARANDELA SEGURIDAD 13 | 1 | HIERRO ZINCADO | Q301329000 |
| 16 | TOR.EX.M12X40 H.ZINCADO | 1 | | Q011376000 |
| 17 | ARANDELA A5 | 1 | AISI 304 | Q232030000 |
| 18 | ARAND.ABAN. A5 A.304 | 1 | AISI 304 | Q242030000 |
| 19 | TORN.EXA. M5X15 A.304 | 1 | | Q012032000 |
| 20 | RETEN V-RING 70 | 1 | NITRILO | P624913000 |
| 21 | RETEN V-RING 85 | 1 | NITRILO | P624914000 |
| 22 | CORREA 13 | 1 | | P625903000 |

## LF-18

| | | | | |
|---|---|---|---|---|
| 1 | TAMBOR COMPLETO 18 | | | P634910000 |
| | ENVOLVENTE TAMBOR 18 | 1 | AISI 304 | |
| | FRENTE TAMBOR 18 | 1 | AISI 304 | |
| | ARANDELA A8 | 6 | AISI 304 | |
| | FONDO TAMBOR 18 | 1 | AISI 304 | |
| | REFUERZO FONDO TAMBOR 18 | 1 | AISI 304 | |
| | PALA 18 | 3 | AISI 304 | |
| | TUERCA EXAG. M8x1 INOX. | 9 | | |
| | VARILLA PALA 18 | 6 | AISI 303 | |
| | JUNTA TOR. 69x3 | 1 | NBR 80 SHORE A | |
| | EJE TAMBOR 18 | 1 | F-112 | |
| | CASQUILLO EN EJE 18 | 1 | AISI 304 | |
| 12 | CHAVETA 14x9x50 | 1 | | P626010000 |
| 13 | POLEA TAMBOR 13,18 | 1 | L-2620 | P626006000 |
| 14 | ARANDELA POLEA 13,18 | 1 | HIERRO | P626012000 |
| 15 | ARANDELA SEGURIDAD 13 | 1 | HIERRO ZINCADO | Q301329000 |
| 16 | TOR.EX.M12X40 H.ZINCADO | 1 | | Q011376000 |
| 17 | ARANDELA A5 | 1 | AISI 304 | Q232030000 |
| 18 | ARAND.ABAN. A5 A.304 | 1 | AISI 304 | Q242030000 |
| 19 | TORN.EXA. M5X15 A.304 | 1 | | Q012032000 |
| 20 | RETEN V-RING 80 | 1 | NITRILO | P634911000 |
| 21 | RETEN V-RING 95 | 1 | NITRILO | P634912000 |
| 22 | CORREA | 1 | | P635902000 |

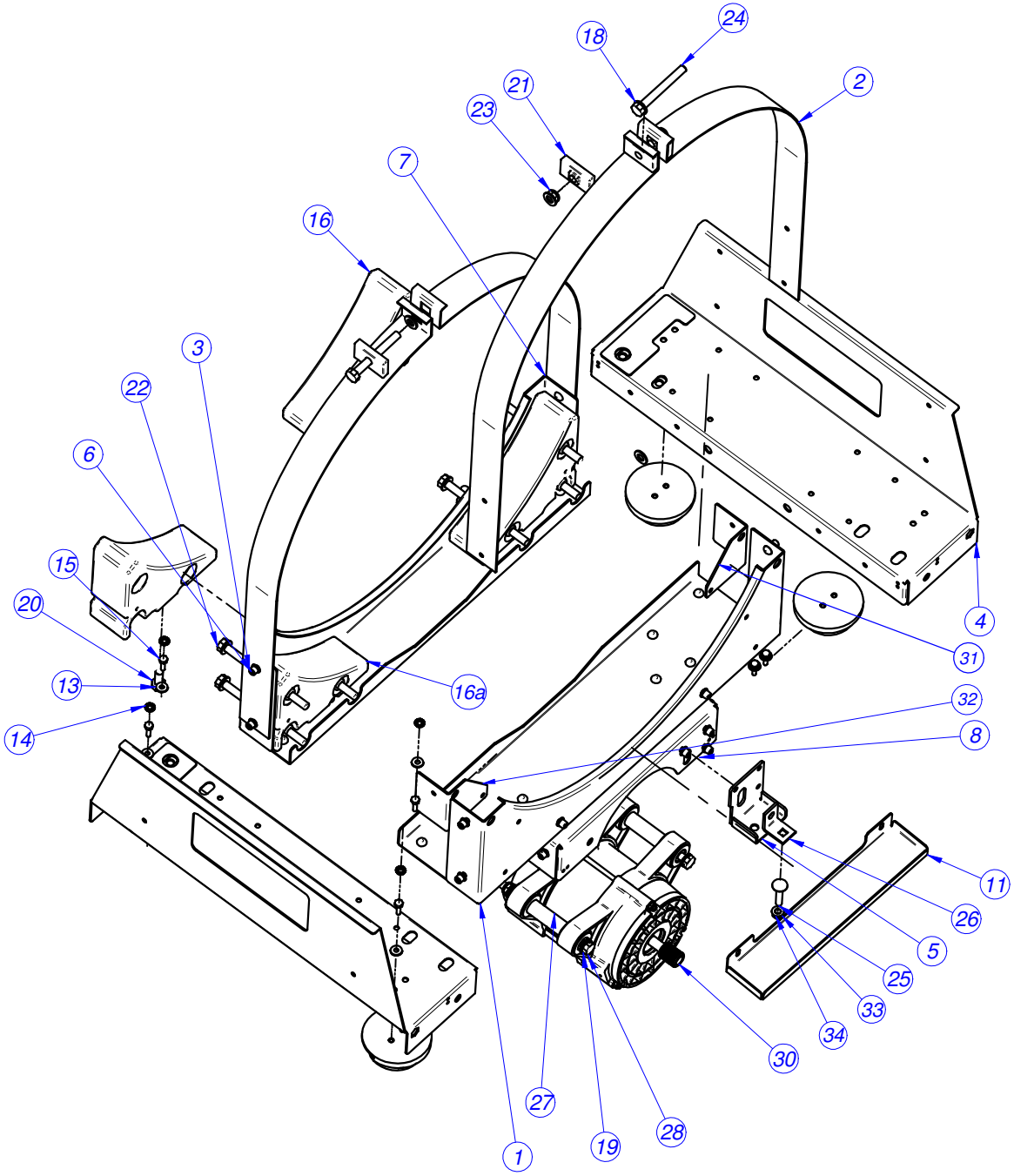
24
18
2
21
23
7
16
3
22
6
15
20
13
14
16a
31
4
32
8
11
26
5
25
33
34
30
27
19
28
1

# LF-8

| | | | | |
|---|---|---|---|---|
| 1 | CUNA COMPLETA 8 | 1 | | P610208000 |
| | TRAVESAÑO POSTERIOR CUNA 8 | 1 | GALVANIZED STEEL | |
| | ABRAZADERA LARGA 8 | 4 | GALVANIZADO | |
| | COLLAR MAXLOK 6.4 | 33 | | |
| | LATERAL CUNA 8 | 2 | GALVANIZADO | |
| | TENSOR FIJO MOTOR | 1 | GALVANIZADO | |
| | REMACHE MAXLOK 6.4 | 33 | | |
| | TRAVESAÑO ANTERIOR CUNA 8 | 1 | GALVANIZED STEEL | |
| | SOPORTE MOTOR 8 | 1 | GALVANIZADO | |
| 9 | ARANDELA A8 | 1 | AISI 304 | Q232050000 |
| 10 | TUE.EX.AUT.M8 8.8 ZINCADA | 1 | HIERRO ZINCADO | Q221309000 |
| | CANALETA FUGAS | 1 | AISI 304 | |
| 12 | BASE MUELLE | 4 | ALUMINIO | P620106000 |
| 13 | ARANDELA 16X6X1.2 A.304 | 8 | AISI 304 | Q302022000 |
| 14 | ARAND.ABAN. A6 A.304 | 8 | AISI 304 | Q242040000 |
| 15 | TORN.EXA. M6X20 A.304 | 8 | AISI 304 | Q012043000 |
| 16 | CONTRAPESO 8 | 4 | UNE-EN-GJL-200 (GG-20) | P610207000 |
| 17 | APOYO CONTRAPESO 8, 13 | 2 | GALVANIZADO | P610212000 |
| 18 | ARANDELA A10 | 23 | HIERRO ZINCADO | Q232060000 |
| 19 | ARAND.ABAN. A6 A.304 | 8 | AISI 304 | Q242040000 |
| 20 | TORNILLO EXAGONAL M10X25 | 4 | HIERRO ZINCADO | Q011364000 |
| 21 | AMARRE CUBA | 4 | AISI 304 | P620208000 |
| 22 | TORN. EXAG. M10x140 | 6 | HIERRO | Q151394000 |
| 23 | TUE.EX.AUT.M10 8.8 ZIN | 10 | HIERRO ZINCADO | Q221306000 |
| 24 | TORNILLO EXAGONAL M10X80 | 2 | HIERRO ZINCADO | Q011360000 |
| 25 | TORN DIN 603 M8x35 | 1 | HIERRO | Q151393000 |
| 26 | TENSOR MOTOR | 1 | GALVANIZADO | P620214000 |
| 27 | TUBO SOPORTE MOTOR 8 | 2 | HIERRO | P615908000 |
| 28 | TORN. EXAG. M10x150 DIN931 | 2 | AISI 304 | Q151525000 |
| 30 | MOTOR 8 | 1 | | P615906000 |
| | REFURZO CUNA-CUBA 8 IZQ. | 1 | GALVANIZADO | |
| | REFURZO CUNA-CUBA 8 DER. | 1 | GALVANIZADO | |
| 33 | TUE. EX. AUT. M8 8.8 ZINCADA | 1 | | Q221309000 |
| 34 | ARANDELA A8 | 1 | | Q232050000 |

# LF-13

| | | | | |
|---|---|---|---|---|
| 1 | CUNA COMPLETA 13 | | | P620207000 |
| | TRAVESAÑO POSTERIOR CUNA 13 | 1 | GALVANIZED STEEL | |
| | ABRAZADERA LARGA 13 | 4 | GALVANIZADO | |
| | COLLAR MAXLOK 6.4 | 33 | | |
| | LATERAL CUNA 13 | 2 | GALVANIZADO | |
| | TENSOR FIJO MOTOR | 1 | GALVANIZADO | |
| | REMACHE MAXLOK 6.4 | 33 | | |
| | TRAVESAÑO ANTERIOR CUNA 13 | 1 | GALVANIZED STEEL | |
| | SOPORTE MOTOR 13 | 1 | GALVANIZADO | |
| 9 | ARANDELA A8 | 1 | AISI 304 | Q232050000 |
| 10 | TUE.EX.AUT.M8 8.8 ZINCADA | 1 | HIERRO ZINCADO | Q221309000 |
| | CANALETA FUGAS | 1 | AISI 304 | |
| 12 | BASE MUELLE | 4 | ALUMINIO | P620106000 |
| 13 | ARANDELA 16X6X1.2 A.304 | 8 | AISI 304 | Q302022000 |
| 14 | ARAND.ABAN. A6 A.304 | 8 | AISI 304 | Q242040000 |
| 15 | TORN.EXA. M6X20 A.304 | 8 | AISI 304 | Q012043000 |
| 16 | CONTRAPESO 8 | 4 | UNE-EN-GJL-200 (GG-20) | P620201000 |
| 17 | APOYO CONTRAPESO 8, 13 | 2 | GALVANIZADO | P610212000 |
| 18 | ARANDELA A10 | 23 | HIERRO ZINCADO | Q232060000 |
| 19 | ARAND.ABAN. A6 A.304 | 8 | AISI 304 | Q242040000 |
| 20 | TORNILLO EXAGONAL M10X25 | 4 | HIERRO ZINCADO | Q011364000 |
| 21 | AMARRE CUBA | 4 | AISI 304 | P620208000 |
| 22 | TORN. EXAG. M10x140 | 6 | HIERRO | Q151394000 |
| 23 | TUE.EX.AUT.M10 8.8 ZIN | 10 | HIERRO ZINCADO | Q221306000 |
| 24 | TORNILLO EXAGONAL M10X80 | 2 | HIERRO ZINCADO | Q011360000 |
| 25 | TORN DIN 603 M8x35 | 1 | HIERRO | Q151393000 |
| 26 | TENSOR MOTOR | 1 | GALVANIZADO | P620214000 |
| 27 | TUBO SOPORTE MOTOR 13 | 2 | HIERRO | P625901000 |
| 28 | TORN. EXAG. M10x180 DIN931 | 2 | | Q151526000 |
| 30 | MOTOR 13 | 1 | | P625905000 |
| | REFUERZO CUNA-CUBA 13 IZQ. | 1 | GALVANIZADO | |
| | REFUERZO CUNA-CUBA 13 DER. | 1 | GALVANIZADO | |
| 33 | TUE. EX. AUT. M8 8.8 ZINCADA | 1 | | Q221309000 |
| 34 | ARANDELA A8 | 1 | | Q232050000 |

# LF-18

| | | | | |
|---|---|---|---|---|
| 1 | CUNA COMPLETA 18 | | | P630207000 |
| | TRAVESAÑO POSTERIOR CUNA 18 | 1 | GALVANIZED STEEL | |
| | ABRAZADERA LARGA 18 | 4 | GALVANIZADO | |
| | COLLAR MAXLOK 6.4 | 33 | | |
| | LATERAL CUNA 18 | 2 | GALVANIZADO | |
| | TENSOR FIJO MOTOR | 1 | GALVANIZADO | |
| | REMACHE MAXLOK 6.4 | 33 | | |
| | TRAVESAÑO ANTERIOR CUNA 18 | 1 | GALVANIZED STEEL | |
| | SOPORTE MOTOR 18 | 1 | GALVANIZADO | |
| 9 | ARANDELA A8 | 1 | AISI 304 | Q232050000 |
| 10 | TUE.EX.AUT.M8 8.8 ZINCADA | 1 | HIERRO ZINCADO | Q221309000 |
| | CANALETA FUGAS | 1 | AISI 304 | |
| 12 | BASE MUELLE | 4 | ALUMINIO | P620106000 |
| 13 | ARANDELA 16X6X1.2 A.304 | 8 | AISI 304 | Q302022000 |
| 14 | ARAND.ABAN. A6 A.304 | 8 | AISI 304 | Q242040000 |
| 15 | TORN.EXA. M6X20 A.304 | 8 | AISI 304 | Q012043000 |
| 16 | CONTRAPESO DELANTERO 18 | 2 | UNE-EN-GJL-200 (GG-20) | P630212000 |
| 16a | CONTRAPESO POSTERIOR 18 | 2 | UNE-EN-GJL-200 (GG-20) | P630208000 |
| 17 | APOYO CONTRAPESO 8, 13 | 2 | GALVANIZADO | P610212000 |
| 18 | ARANDELA A10 | 23 | HIERRO ZINCADO | Q232060000 |
| 19 | ARAND.ABAN. A6 A.304 | 8 | AISI 304 | Q242040000 |
| 20 | TORNILLO EXAGONAL M10X25 | 4 | HIERRO ZINCADO | Q011364000 |
| 21 | AMARRE CUBA | 4 | AISI 304 | P620208000 |
| 22 | TORN. EXAG. M10x140 | 6 | HIERRO | Q151394000 |
| 23 | TUE.EX.AUT.M10 8.8 ZIN | 10 | HIERRO ZINCADO | Q221306000 |
| 24 | TORNILLO EXAGONAL M10X80 | 2 | HIERRO ZINCADO | Q011360000 |
| 25 | TORN DIN 603 M8x35 | 1 | HIERRO | Q151393000 |
| 26 | TENSOR MOTOR | 1 | GALVANIZADO | P620214000 |
| 27 | TUBO SOPORTE MOTOR 18 | 2 | HIERRO | P635907000 |
| 28 | TORN. EXAG. M10x220 DIN931 | 2 | | Q151527000 |
| 30 | MOTOR 18 | 1 | | P635906000 |
| | REFUERZO CUNA-CUBA 18 IZQ. | 1 | GALVANIZADO | |
| | REFUERZO CUNA-CUBA 18 DER. | 2 | GALVANIZADO | |
| 33 | TUE. EX. AUT. M8 8.8 ZINCADA | 1 | | Q221309000 |
| 34 | ARANDELA A8 | 1 | | Q232050000 |

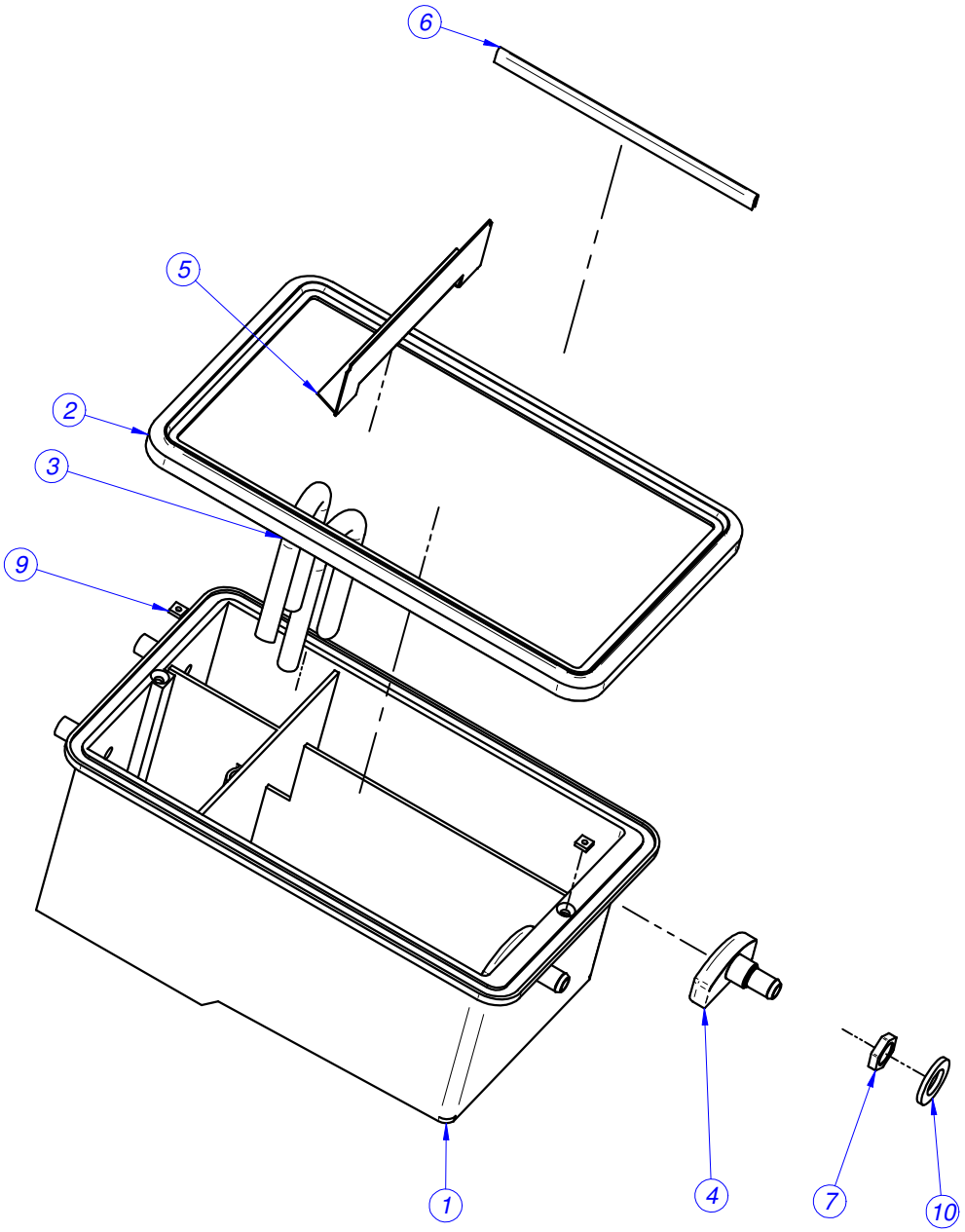


| | | | | | |
|---|---|---|---|---|---|
| 1 | CUBETA DE DETERGENTES | 1 | POLIPROPILENO (20% TALCO) | P440700000 | HE-30109 |
| 2 | JUNTA CUBETA 1003431 | 1 | | P500702000 | |
| 3 | TUBO SIFON | 2 | AISI 304 | P440702000 | HB-30496-03 |
| 4 | DIFUSOR DE DETERGENTES | 2 | P.P (20%de talco) | P440701000 | |
| 5 | ESCUADRA PROTECCION | 1 | AISI 304 | P440715000 | HB-30498-02 |
| 6 | PERFIL REFUERZO | 1 | AISI 304 | P440721000 | HB-30534 |
| 7 | TUERCA 16X1,5 | 2 | LATON | Q223018000 | HB-17634 |
| 8* | ABRAZADERA 25-40 | 4 | | Q881305000 | |
| 9 | TUERCA CUADRADA M.4 | 2 | AISI 304 | Q222004000 | HB-30539 |
| 10 | ARANDELA PLANA A17 | 2 | HIERRO ZINCADO | Q301302000 | |
| - | **CUBETERA COMPLETA** | - | | | |

| Zk./Nº | Pieza | Cant. | Materiala/Material | Klas. zk/Nº Clas. | Gainazal akabera/Tratamiento |
|---|---|---|---|---|---|

| Zk./Nº | Aldaketa/Modificaciones | Nork proposatua/Propuesta de | Data/Fecha |
|---|---|---|---|
| - | - | - | - |
| - | - | - | - |
| - | - | - | - |
| - | - | - | - |
| - | - | - | - |

Perdoi orokorrak
Tolerancias generales

< 5 ± 0.2 | 50 ÷ 100 ± 0.8
5 ÷ 25 ± 0.4 | >100± 1
25 ÷ 50 ± 0.6 | α ± 1º

| | Sinadura/Firma | Data/Fecha |
|---|---|---|
| Marraztua/Dibujado | **ctytgat** | **2004-04-27** |
| Proiektatua/Proyectado | **ctytgat** | **2004-04-27** |
| Egiaztatua/Comprobado | | **2004-05-12** |

FAGOR

Fagor Industrial,Koop.Elk, Mugatua

Gainazal perdoia
Mecanizado superficial

—

Eskala/Escala

**1:2**

# ARROPA GARBIGAILUAK

Plano Zk./Plano Nº

-

Zk. ord. du

-

Zk.gaitik ord.

Plano hau ezin daiteke erabili, ez berriztatu, gure baimenik gabe.

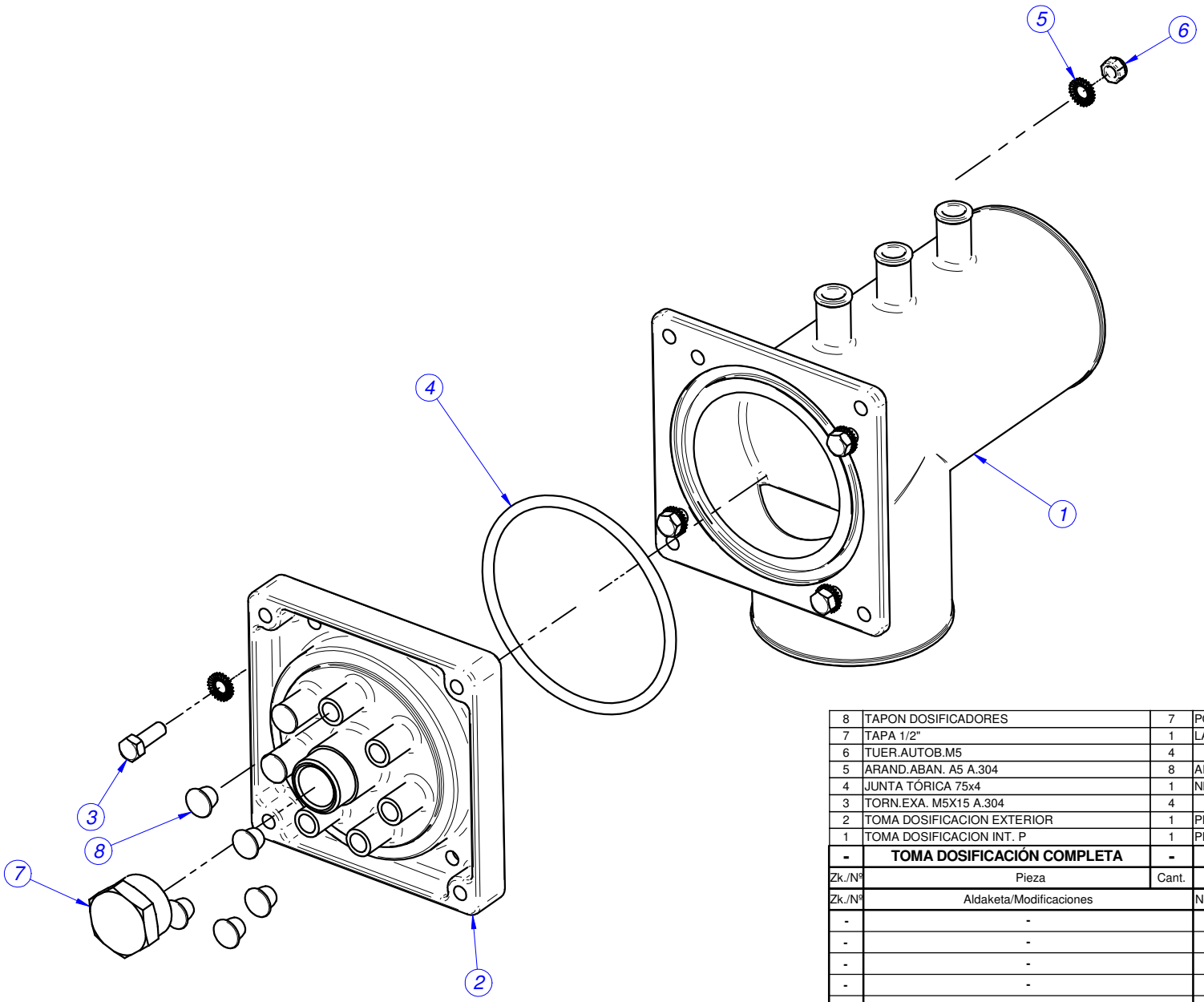


| | | | | | |
|---|---|---|---|---|---|
| 8 | TAPON DOSIFICADORES | 7 | POLIETILENO | P620709000 | HB-31442-01 |
| 7 | TAPA 1/2" | 1 | LATON | P620710000 | HB-31465-01 |
| 6 | TUER.AUTOB.M5 | 4 | | Q222030000 | |
| 5 | ARAND.ABAN. A5 A.304 | 8 | AISI 304 | Q242030000 | |
| 4 | JUNTA TÓRICA 75x4 | 1 | NBR 80 SHORE A N3578-81 | Q307081000 | |
| 3 | TORN.EXA. M5X15 A.304 | 4 | | Q012032000 | |
| 2 | TOMA DOSIFICACION EXTERIOR | 1 | PPK-1032 E | P620706000 | HC-31294-03 |
| 1 | TOMA DOSIFICACION INT. P | 1 | PPK-1032 E | P620701000 | HC-31193-05 |
| **-** | **TOMA DOSIFICACIÓN COMPLETA** | **-** | **PPK-1032 E** | **P620707000** | |

| Zk./Nº | Pieza | Cant. | Materiala/Material | Klas. zk/Nº Clas. | Gainazal akabera/Tratamiento |
|---|---|---|---|---|---|

| Zk./Nº | Aldaketa/Modificaciones | Nork proposatua/Propuesta de | Data/Fecha |
|---|---|---|---|
| - | - | - | - |
| - | - | - | - |
| - | - | - | - |
| - | - | - | - |
| - | - | - | - |

Perdoi orokorrak
Tolerancias generales

< 5 ± 0.2 | 50 ÷ 100 ± 0.8
5 ÷ 25 ± 0.4 | >100± 1
25 ÷ 50 ± 0.6 | α ± 1º

| | Sinadura/Firma | Data/Fecha |
|---|---|---|
| Marraztua/Dibujado | **ctytgat** | **2004-04-27** |
| Proiektatua/Proyectado | **ctytgat** | **2004-04-27** |
| Egiaztatua/Comprobado | | **2004-05-12** |

FAGOR
Fagor Industrial,Koop.Elk, Mugatua

Gainazal perdoia
Mecanizado superficial
—

Eskala/Escala
**1:2**

# ARROPA GARBIGAILUAK

Plano hau ezin daiteke erabili, ez berriztatu, gure baimenik gabe.

Plano Zk./Plano Nº
HC-31295

- Zk. ord. du
- Zk.gaitik ord.

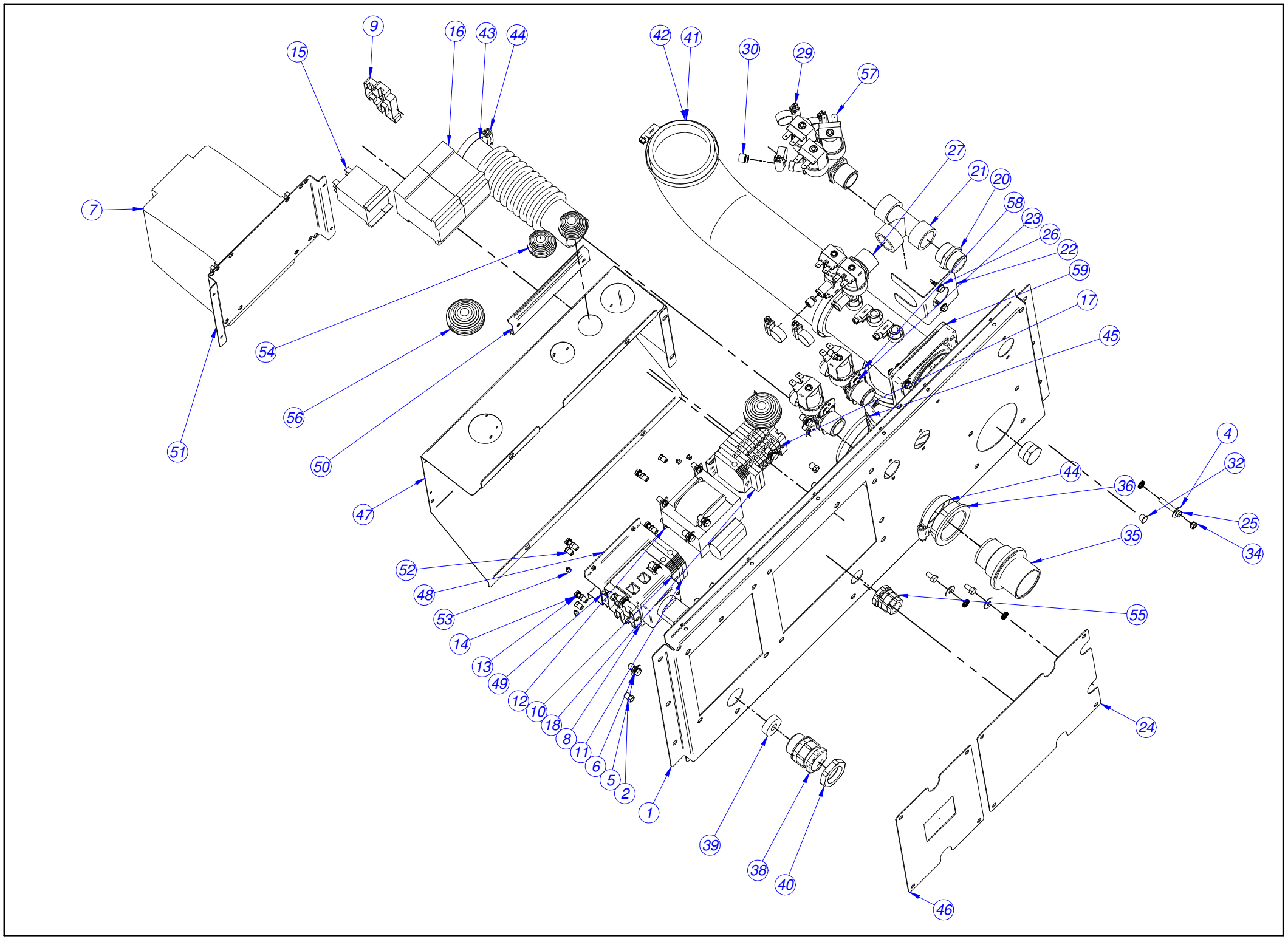
1
2
4
5
6
7
8
9
10
11
12
13
14
15
16
17
18
20
21
22
23
24
25
26
27
29
30
32
34
35
36
38
39
40
41
42
43
44
45
46
47
48
49
50
51
52
53
54
55
56
57
58
59

## LF-8

| | | | | |
|---|---|---|---|---|
| 1 | PANEL POSTERIOR TOMAS 8 V2 | 1 | GALVANIZADO | P610325000 |
| 2 | REMACHE EXAG. M.5 (9688-0514) | 20 | ACERO-BICROMATADO | Q221342000 |
| 4 | ARANDELA 16X6X1.2 A.304 | 18 | AISI 304 | Q302022000 |
| 5 | ARAND.ABAN. A5 A.304 | 22 | AISI 304 | Q242030000 |
| 6 | TORN.EXA. M5X10 A.304 | 14 | | Q012031000 |
| 7 | VARIADOR 1.1 Kw | 1 | | P613007000 |
| 8 | SECCIONADOR 32A | 1 | | P623003000 |
| 9 | TOPE FINAL | 3 | | Z263303000 |
| 10 | BORNA DE PASO AZUL | 1 | | Z263302000 |
| 11 | BORNE TIER 10 WPE-10103.O | 2 | | P453026000 |
| 12 | TRANSFORMADOR 20020-024 | 1 | | P623004000 |
| 13 | ARAND.ABAN. A.4 A304 | 12 | | Q242020000 |
| 14 | TORN.ALOM.M4X10 | 8 | | Q032021000 |
| 15 | RELE 230V. 16A 50-60 HZ | 1 | 62.82.8.230.0308 | Z203062000 |
| 16 | CONTAC. SIRIUS 3R 230V.50-60 | 2 | | Z203050000 |
| 17 | REGLETA BORNAJE 2 PISOS | 7 | | P623006000 |
| 18 | BORNAS PORTA FUSIBLES | 2 | | R073005000 |
| 20 | Manguito 3/4" | 1 | | Z102301000 |
| 21 | Te a 90º-3/4" | 1 | LATON | P535020000 |
| 22 | TOPE ELECTROVALVULA | 1 | ALUMINIZADO | P535003000 |
| 23 | TOR.ALO.M4X6 H.ZINCADO | 4 | | Q151320000 |
| 24 | TAPA POSTERIOR V2 | 1 | GALVANIZADO | P620342000 |
| 25 | TORNILLO EXAGONAL M5X30 | 4 | HIERRO ZINCADO | Q011353000 |
| 26 | TORN.BROCA 4,8X16 | 2 | | Q151323000 |
| 27 | ELECTROVALVULA DOBLE | 1 | | P255001000 |
| 29 | ABRAZADERA 25-40 | 10 | | Q881305000 |
| 30 | REGULADOR 3L NE.254.023 | 2 | | P443042000 |
| 32 | TAPON DOSIFICADORES | 7 | POLIETILENO | P620709000 |
| 33* | TAPA 1/2" | 1 | LATON | P620710000 |
| 34 | TUER.AUTOB.M5 | 4 | | Q222030000 |
| 35 | PASAMUROS ARBOL LAVADO | 1 | P.P.K.-1032E+30%F.V. | Z740701000 |
| 36 | TUERCA PASAMUROS | 1 | P.P.K.-1032 E+30%F.V. | Z710708000 |
| 38 | PRENSA ESTOPAS PG-21 | 1 | | R023013000 |
| 39 | JUNTA GOMA (GAES) | 1 | | R023026000 |
| 40 | TUERCA ROSCA Pg 21 | 1 | LATON | Q223016000 |
| 41 | ABRAZADERA 70-90 | 4 | ACERO | Q881326000 |
| 42 | CONDUCTO CUBETA-DOSIF.8 | 1 | E.P.D.M | P610701000 |
| 43 | CONDUCTO SALIDA VAPOR | 1 | E.P.D.M | P620708000 |
| 44 | ABRAZADERA 32-50L | 2 | | Q881306000 |
| 45 | CONDUCTO DOSIFICADOR CUBA 13 | 1 | E.P.D.M. | P620702000 |
| 46 | TAPA SECCIONADOR V2 | 1 | GALVANIZADO | P620341000 |
| 47 | PORTA CUADRO ALIMENTACIÓN V2 | 1 | GALVANIZADO | P620346000 |
| 48 | CALZO SECCIONADOR LF-25 ; 55 | 1 | GALVANIZADO | P533095000 |
| 49 | GUIA CONTACTOR L-100 | 2 | | Z403016000 |
| 50 | GUIA CONTACTOR L-138 " | 1 | | Z103084000 |
| 51 | CALZO VARIADOR 8,13,18 | 1 | GALVANIZADO | P620325000 |
| 52 | Remache exagonal M4 | 12 | ACERO BICROMATADO | Q221341000 |
| 53 | REMACHE 4X8 ALMG3 / ALUMINIO | 14 | | Q419005000 |
| 54 | PASAMUROS DIAMETRO 30 | 2 | | X723014000 |
| 55 | PRENSA ESTOPAS | 1 | | R073004000 |
| 56 | PASA CABLES | 2 | | N103013000 |
| 57 | E.V. TRIPLE COD.255.641 | 1 | | Z611123000 |
| 58 | E.V.SIMPLE 0V COD.255.208 | 1 | | Z701135000 |
| 59 | TOMA DOSIFICACION COMPLETA | 1 | | P620707000 |

## LF-13

| | | | | |
|---|---|---|---|---|
| 1 | PANEL POSTERIOR TOMAS 13 V2 | 1 | GALVANIZADO | P620331000 |
| 2 | REMACHE EXAG. M.5 (9688-0514) | 20 | ACERO-BICROMATADO | Q221342000 |
| 4 | ARANDELA 16X6X1.2 A.304 | 18 | AISI 304 | Q302022000 |
| 5 | ARAND.ABAN. A5 A.304 | 22 | AISI 304 | Q242030000 |
| 6 | TORN.EXA. M5X10 A.304 | 14 | | Q012031000 |
| 7 | VARIADOR 1.5 Kw | 1 | | P623002000 |
| 8 | SECCIONADOR 32A | 1 | | P623003000 |
| 9 | TOPE FINAL | 3 | | Z263303000 |
| 10 | BORNA DE PASO AZUL | 1 | | Z263302000 |
| 11 | BORNE TIER 10 WPE-10103.O | 2 | | P453026000 |
| 12 | TRANSFORMADOR 20020-024 | 1 | | P623004000 |
| 13 | ARAND.ABAN. A.4 A304 | 12 | | Q242020000 |
| 14 | TORN.ALOM.M4X10 | 8 | | Q032021000 |
| 15 | RELE 230V. 16A 50-60 HZ | 1 | 62.82.8.230.0308 | Z203062000 |
| 16 | CONTAC. SIRIUS 3R 230V.50-60 | 2 | | Z203050000 |
| 17 | REGLETA BORNAJE 2 PISOS | 7 | | P623006000 |
| 18 | BORNAS PORTA FUSIBLES | 2 | | R073005000 |
| 20 | Manguito 3/4" | 1 | | Z102301000 |
| 21 | Te a 90º-3/4" | 1 | LATON | P535020000 |
| 22 | TOPE ELECTROVALVULA | 1 | ALUMINIZADO | P535003000 |
| 23 | TOR.ALO.M4X6 H.ZINCADO | 4 | | Q151320000 |
| 24 | TAPA POSTERIOR V2 | 1 | GALVANIZADO | P620342000 |
| 25 | TORNILLO EXAGONAL M5X30 | 4 | HIERRO ZINCADO | Q011353000 |
| 26 | TORN.BROCA 4,8X16 | 2 | | Q151323000 |
| 27 | ELECTROVALVULA DOBLE | 1 | | P255001000 |
| 29 | ABRAZADERA 25-40 | 10 | | Q881305000 |
| 30 | REGULADOR 3L NE.254.023 | 2 | | P443042000 |
| 32 | TAPON DOSIFICADORES | 7 | POLIETILENO | P620709000 |
| 33* | TAPA 1/2" | 1 | LATON | P620710000 |
| 34 | TUER.AUTOB.M5 | 4 | | Q222030000 |
| 35 | PASAMUROS ARBOL LAVADO | 1 | P.P.K.-1032E+30%F.V. | Z740701000 |
| 36 | TUERCA PASAMUROS | 1 | P.P.K.-1032 E+30%F.V. | Z710708000 |
| 38 | PRENSA ESTOPAS PG-21 | 1 | | R023013000 |
| 39 | JUNTA GOMA (GAES) | 1 | | R023026000 |
| 40 | TUERCA ROSCA Pg 21 | 1 | LATON | Q223016000 |
| 41 | ABRAZADERA 70-90 | 4 | ACERO | Q881326000 |
| 42 | CONDUCTO CUBETA-DOSIF.13 | 1 | E.P.D.M | P620705000 |
| 43 | CONDUCTO SALIDA VAPOR | 1 | E.P.D.M | P620708000 |
| 44 | ABRAZADERA 32-50L | 2 | | Q881306000 |
| 45 | CONDUCTO DOSIFICADOR CUBA 13 | 1 | E.P.D.M. | P620702000 |
| 46 | TAPA SECCIONADOR V2 | 1 | GALVANIZADO | P620341000 |
| 47 | PORTA CUADRO ALIMENTACIÓN V2 | 1 | GALVANIZADO | P620346000 |
| 48 | CALZO SECCIONADOR LF-25 ; 55 | 1 | GALVANIZADO | P533095000 |
| 49 | GUIA CONTACTOR L-100 | 2 | | Z403016000 |
| 50 | GUIA CONTACTOR L-138 " | 1 | | Z103084000 |
| 51 | CALZO VARIADOR 8,13,18 | 1 | GALVANIZADO | P620325000 |
| 52 | Remache exagonal M4 | 12 | ACERO BICROMATADO | Q221341000 |
| 53 | REMACHE 4X8 ALMG3 / ALUMINIO | 14 | | Q419005000 |
| 54 | PASAMUROS DIAMETRO 30 | 3 | | X723014000 |
| 55 | PRENSA ESTOPAS | 1 | | R073004000 |
| 56 | PASA CABLES | 2 | | N103013000 |
| 57 | E.V. TRIPLE COD.255.641 | 1 | | Z611123000 |
| 58 | E.V.SIMPLE 0V COD.255.208 | 1 | | Z701135000 |
| 59 | TOMA DOSIFICACION COMPLETA | 1 | | P620707000 |

## LF-18

| | | | | |
|---|---|---|---|---|
| 1 | PANEL POSTERIOR TOMAS 18 V2 | 1 | GALVANIZADO | P630317000 |
| 2 | REMACHE EXAG. M.5 (9688-0514) | 20 | ACERO-BICROMATADO | Q221342000 |
| 4 | ARANDELA 16X6X1.2 A.304 | 18 | AISI 304 | Q302022000 |
| 5 | ARAND.ABAN. A5 A.304 | 22 | AISI 304 | Q242030000 |
| 6 | TORN.EXA. M5X10 A.304 | 14 | | Q012031000 |
| 7 | VARIADOR 2.2 Kw | 1 | | P633003000 |
| 8 | SECCIONADOR 32A | 1 | | P623003000 |
| 9 | TOPE FINAL | 3 | | Z263303000 |
| 10 | BORNA DE PASO AZUL | 1 | | Z263302000 |
| 11 | BORNE TIER 10 WPE-10103.O | 2 | | P453026000 |
| 12 | TRANSFORMADOR 20020-024 | 1 | | P623004000 |
| 13 | ARAND.ABAN. A.4 A304 | 12 | | Q242020000 |
| 14 | TORN.ALOM.M4X10 | 8 | | Q032021000 |
| 15 | RELE 230V. 16A 50-60 HZ | 1 | 62.82.8.230.0308 | Z203062000 |
| 16 | CONTAC. SIRIUS 3R 230V.50-60 | 2 | | Z203050000 |
| 17 | REGLETA BORNAJE 2 PISOS | 7 | | P623006000 |
| 18 | BORNAS PORTA FUSIBLES | 2 | | R073005000 |
| 20 | Manguito 3/4" | 1 | | Z102301000 |
| 21 | Te a 90º-3/4" | 1 | LATON | P535020000 |
| 22 | TOPE ELECTROVALVULA | 1 | ALUMINIZADO | P535003000 |
| 23 | TOR.ALO.M4X6 H.ZINCADO | 4 | | Q151320000 |
| 24 | TAPA POSTERIOR V2 | 1 | GALVANIZADO | P620342000 |
| 25 | TORNILLO EXAGONAL M5X30 | 4 | HIERRO ZINCADO | Q011353000 |
| 26 | TORN.BROCA 4,8X16 | 2 | | Q151323000 |
| 27 | ELECTROVALVULA DOBLE | 1 | | P255001000 |
| 29 | ABRAZADERA 25-40 | 10 | | Q881305000 |
| 30 | REGULADOR 3L NE.254.023 | 2 | | P443042000 |
| 32 | TAPON DOSIFICADORES | 7 | POLIETILENO | P620709000 |
| 33* | TAPA 1/2" | 1 | LATON | P620710000 |
| 34 | TUER.AUTOB.M5 | 4 | | Q222030000 |
| 35 | PASAMUROS ARBOL LAVADO | 1 | P.P.K.-1032E+30%F.V. | Z740701000 |
| 36 | TUERCA PASAMUROS | 1 | P.P.K.-1032 E+30%F.V. | Z710708000 |
| 38 | PRENSA ESTOPAS PG-21 | 1 | | R023013000 |
| 39 | JUNTA GOMA (GAES) | 1 | | R023026000 |
| 40 | TUERCA ROSCA Pg 21 | 1 | LATON | Q223016000 |
| 41 | ABRAZADERA 70-90 | 4 | ACERO | Q881326000 |
| 42 | CONDUCTO CUBETA-DOSIF.18 | 1 | E.P.D.M | P630704000 |
| 43 | CONDUCTO SALIDA VAPOR | 1 | E.P.D.M | P620708000 |
| 44 | ABRAZADERA 32-50L | 2 | | Q881306000 |
| 45 | CONDUCTO DOSIFICADOR CUBA 18 | 1 | E.P.D.M. | P630701000 |
| 46 | TAPA SECCIONADOR V2 | 1 | GALVANIZADO | P620341000 |
| 47 | PORTA CUADRO ALIMENTACIÓN V2 | 1 | GALVANIZADO | P620346000 |
| 48 | CALZO SECCIONADOR LF-25 ; 55 | 1 | GALVANIZADO | P533095000 |
| 49 | GUIA CONTACTOR L-100 | 2 | | Z403016000 |
| 50 | GUIA CONTACTOR L-138 " | 1 | | Z103084000 |
| 51 | CALZO VARIADOR 8,13,18 | 1 | GALVANIZADO | P620325000 |
| 52 | Remache exagonal M4 | 12 | ACERO BICROMATADO | Q221341000 |
| 53 | REMACHE 4X8 ALMG3 / ALUMINIO | 14 | | Q419005000 |
| 54 | PASAMUROS DIAMETRO 30 | 3 | | X723014000 |
| 55 | PRENSA ESTOPAS | 1 | | R073004000 |
| 56 | PASA CABLES | 2 | | N103013000 |
| 57 | E.V. TRIPLE COD.255.641 | 1 | | Z611123000 |
| 58 | E.V.SIMPLE 0V COD.255.208 | 1 | | Z701135000 |
| 59 | TOMA DOSIFICACION COMPLETA | 1 | | P620707000 |

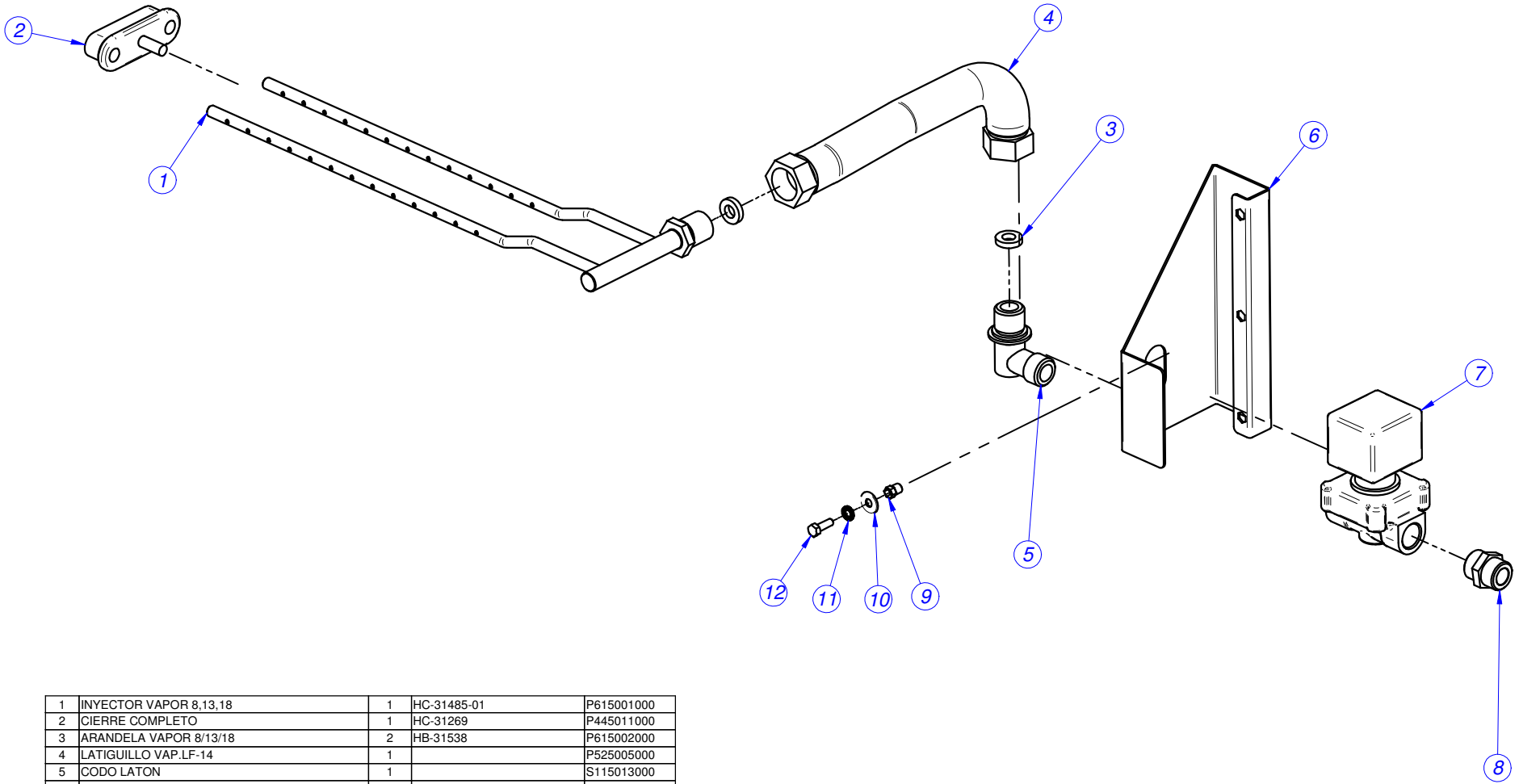


| | | | | |
|---|---|---|---|---|
| 1 | INYECTOR VAPOR 8,13,18 | 1 | HC-31485-01 | P615001000 |
| 2 | CIERRE COMPLETO | 1 | HC-31269 | P445011000 |
| 3 | ARANDELA VAPOR 8/13/18 | 2 | HB-31538 | P615002000 |
| 4 | LATIGUILLO VAP.LF-14 | 1 | | P525005000 |
| 5 | CODO LATON | 1 | | S115013000 |
| 6 | SOPORTE VALVULA DE VAPOR | 1 | HC-31384-01 | P620327000 |
| 7 | VALVULA VAPOR 1/2" 50HZ | 1 | | P505012000 |
| 7 | VALVULA VAPOR 1/2" 60HZ | 1 | | P615003000 |
| 8 | MANGUITO DOBLE 1/2 | 1 | HB-11544-06 | S205023000 |
| 9 | REMACHE EXAGONAL M5 | 1 | | Q221342000 |
| 10 | ARANDELA 16X6X1.2 A.304 | 1 | | Q302022000 |
| 11 | ARAND.ABAN. A5 A.304 | 1 | | Q242030000 |
| 12 | TORN.EXA. M5X15 A.304 | 1 | | Q012032000 |
| | CABLEADO ELECTROVALVULA VAPOR | 1 | | P613016000 |
| | MANGUERA DE VAPOR L=1500 | 1 | | P525007000 |

| Instalaciones | Referencia | Plano | LAV 8 | LAV 13 | LAV 18 |
|---|---|---|---|---|---|
| | | | | | |
| Cableado Programador - Teclado lav 8, 13, 18 Kg | P-623009 | HB-31393-1 | X | X | X |
| Cableado Resistencias 8, 13, 16 Kg | P-623008 | HC-31343-1 | X | X | X |
| Cableado Puerta | P-623010 | HB-31394-1 | X | X | X |
| **Circuito Programador Lavd M** | **P-613019** | **HC-31311** | **X** | **X** | **X** |
| Circuito Vis-Tecld Lavd M | P-613018 | HC-31310 | X | X | X |
| Esquema teorico Lav 8,13,18 | P-623013 | HC-31346-1 | X | X | X |
| Indicador de componentes Lav | P-623011 | HC-31344 | X | X | X |
| Instalación electrica Lav 8,13,18 kg | P-623007 | HC-30632-2 | X | X | X |
| Interruptor general C.I. | P-623017 | HB-31461 | X | X | X |
| Leyenda Lav | P-623014 | HC-31347 | X | X | X |
| Plano Montaje Lav 8,13,18 | P-623015 | HD-30633-1 | X | X | X |
| | | | | | |
| **Componentes** | **Referencia** | **Plano** | **LAV 8** | **LAV 13** | **LAV 18** |
| Borne doble piso 2,5mm Weidmuller DK 4/35 5276.6 | P-623006 | | 7 | 7 | 7 |
| Borne Azul 10mm | Z-263302 | | 1 | 1 | 1 |
| Borne Azul 35mm | R-673010 | | | | |
| Borne Portafusible | R-073005 | | 2 | 2 | 2 |
| Borne tierra 10mm | P-453026 | | 2 | 2 | 2 |
| Borne tierra 35mm | Z-103035 | | | | |
| Condensador antiparasitario 0,1 uF | Z-233012 | HB-16759-2 | 7 | 7 | 7 |
| Contactor 20A NA | Z-203050 | | 2 | 2 | 2 |
| Contactor 35 A | P-433030 | | | | |
| Contactor 60 A | X-183011 | | | | |
| Electrovalvula simple | Z-701135 | HC-15191 | 2 | 2 | 2 |
| Electrovalvula doble | P-255001 | HB-30214-1 | X | X | X |
| Electrovalvula Triple | Z-611123 | HC-15686-1 | X | X | X |
| Electrovalvula simple 120 L/h Z-102305 | Z-102323 | | | | |
| Electroiman | P-613002 | HB-31369 | X | X | X |
| Fusible 4A | P-184011 | | 2 | 2 | 2 |
| Interuptor magnetico desequilibrio NC | P-533081 | HB-31315 | X | X | X |
| Microrruptor Puerta | R-010534 | | 2 | 2 | 2 |
| Monedero | P-613004 | | X | X | X |
| Motor 8 | P-615904 | | X | | |
| Motor 13 | P-625905 | | | X | |
| Motor 18 | P-635906 | | | | X |
| PG-21 Prensaestopas | R-023013 | | X | X | X |
| PG21 Tuerca | Q-223016 | | X | X | X |
| PG36 Prensaestopas | R-143010 | | | | |
| Regleta 2,5 $mm^2$ TEKOX1106PL | R-693010 | | 2/12 | 2/12 | 2/12 |
| Rele 16 A 2NA 230V 50/60Hz Faston FINDER | Z-203062 | | X | X | X |
| Resistencia 3x2KW | P-613008 | HC-31327 | 3 | | |
| Resistencia 3x3KW | P-623005 | HC-31335 | | 3 | |
| Resistencia 3x4KW | P-633002 | HC-31336 | | | 3 |
| Señalizacion R,S,T,N,PE | Z-683068 | | X | X | X |
| Seccionador 32A 11,5kw Siemens 3LD22 30-OTK13 | P-623003 | | X | X | X |
| Seccionador 63 A 22 kw Siemens 3LD25 30-OTK13 | P-537038 | | | 240 V 1N | 240 V 1N |
| Sonda NTC + Limitador | P-503025 | HB-30787 | X | X | X |
| Terminal mini Mate-n-lok Hembra 170362-1 | P-623016 | | | | |
| Tope final 10mm | Z-263303 | | X | X | X |
| Transformador 230/20-0-20 24-0 | P-623004 | HC-31348 | X | X | X |
| Variador 8Kg | P-613007 | | X | | |
| Variador 13Kg | P-623002 | | | X | |
| Variador 18Kg | P-633003 | | | | X |
| Valvula de vaciado 8, 13, 18 Kg | P-302120 | HB-30723 | X | X | X |
| | | | | | |
| **Accesorios** | **Referencia** | **Plano** | **LAV 8** | **LAV 13** | **LAV 18** |
| Taco fisher 10 | R189915000 | | X | X | X |
| Tornillo 8x60 | Q151352000 | | X | X | X |
| Arandela 25X8.4X2 | Q302027000 | | X | X | X |
| Arand. Aban. A10 | Q241560000 | | X | X | X |
| Bolsa 225X355 galga 200 | U266501000 | | X | X | X |
| Manguera entrada de agua | Z602121000 | | X | X | X |
| Conducto cuba valvula | P302121000 | | X | X | X |
| Abrazadera 50-70L | Q881324000 | | X | X | X |
| Bolsa galga-200 155X230 | Z901107000 | | X | X | X |
| Folleto instrucciones LF-8,13,18 | P626501000 | | X | X | X |
| Instrucciones Programacion | P626502000 | | X | X | X |
| Filtro agua | Z701132000 | | X | X | X |

# Esquema eléctrico LF-8-13-18 M

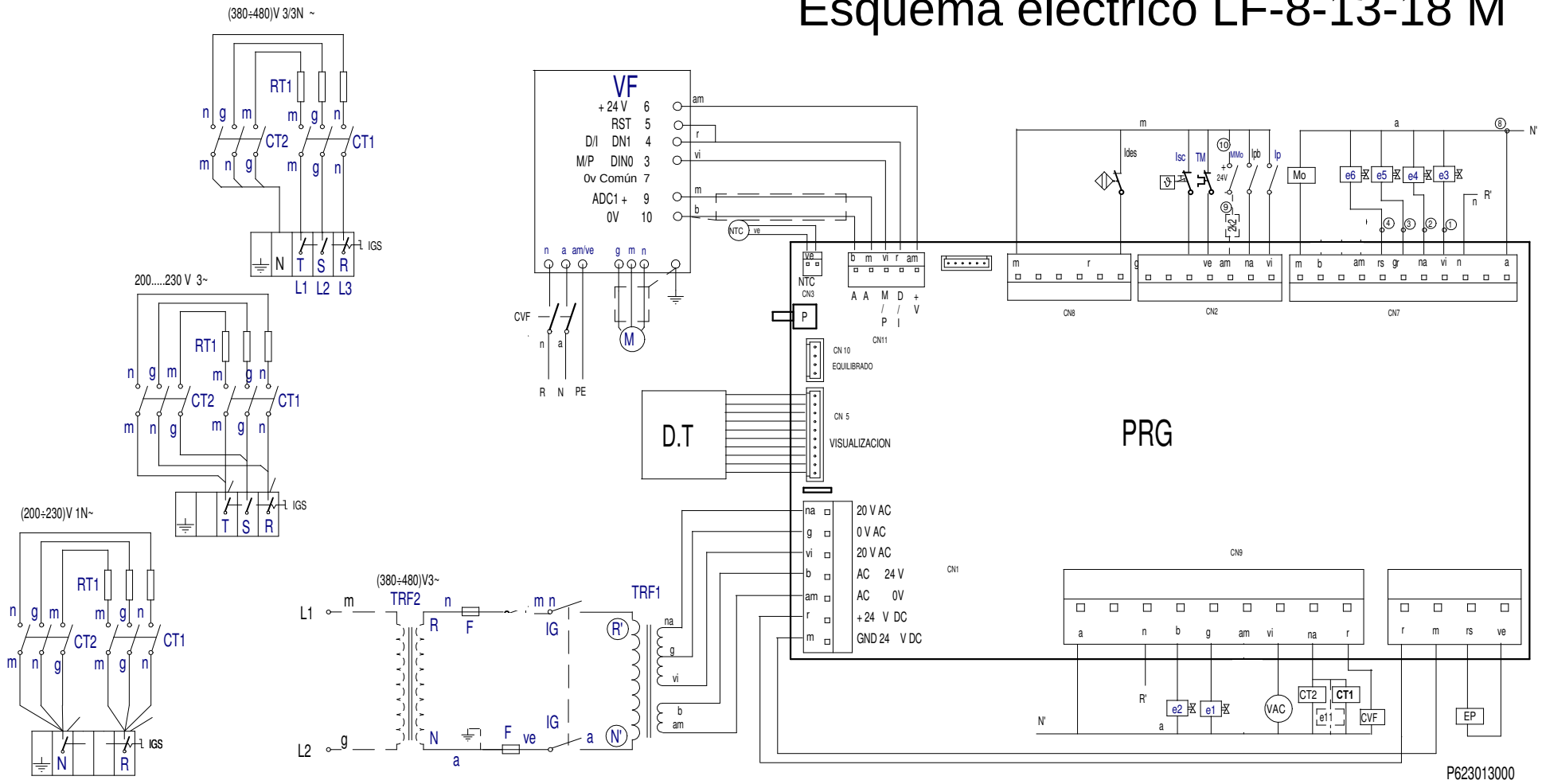


LF / E - 8,13,18 M
LF / AC - 8,13,18 M
LF / V - 8,13,18 M

| - | Esquema teorico Lavadoras 8, 13, 18 | - | - | P623013000 | - |
|---|---|---|---|---|---|
| Zk./Nº | Pieza | Cant. | Materiala/Material | Klas. zk/Nº Clas. | Gainazal akabera/Tratamiento |
| Zk./Nº | Aldaketa/Modificaciones | | Nork proposatua/Propuesta de | Data/Fecha | Perdoi orokorrak Tolerancias generales |
| 1 | Introducir CVF | | M.Maillo | 15-01-2005 | |
| 2 | Introducir puente en VF entre 4 y 5 | | M.Mailo | 21-03-2005 | < 5 ± 0.2 / 50 ÷ 100 ± 0.8 |
| 3 | Cambiar de conexion CVF | | M.Maillo | 10-05-2005 | 5 ÷ 25 ± 0.4 / >100± 1 |
| 4 | eliminar nombres | | c.tytgat | 18-01-2006 | 25 ÷ 50 ± 0.6 / α ± 1 |
| 5 | Introducir IE | | M.Maillo | 18-03-2006 | |

| | Sinadura/Firma | Data/Fecha |
|---|---|---|
| Marraztua/Dibujado | M.Maillo | 14-07-2004 |
| Proiektatua/Proyectado | M.Maillo | 14-07-2004 |
| Egiaztatua/Comprobado | | 21-07-2004 |

FAGOR
Fagor Industrial,Koop.Elk, Mugatua

Gainazal perdoia
Mecanizado superficial
—

Eskala/Escala
-

**LAVADORAS**

Plano Zk./Plano Nº
HC-31346 - 5

Plano hau ezin daiteke erabili, ez berriztatu, gure baimenik gabe.

- Zk. ord. du
- Zk.gaitik ord.

| Simb / LENG | ESPAÑOL | FRANÇAIS | ENGLISH | DEUTSCH | ITALIANO |
|---|---|---|---|---|---|
| CT = | Contactor Calentamiento | Contacteur Chauffe | Heating Contactor | Heizschütz | Contatore Riscaldamento |
| DP = | Detector posición. | Détecteur position | Position detector | Stellung Taster | Rilevatore posizione |
| DS1 | Dosificador Neutralizante. | Doseur Neutralisant | Neutralizer feeder | Dosiervorrichtung Neutralspülmittel | Dosatore Neutralizzante |
| DS2 | Dosificador jabon liquido. | Doseur lessive liquide | Liquid soap feeder | Dosiervorrichtung Flüssigseife | Dosatore sapone liquido |
| DS3 | Dosificador aditivos. | Doseur additifs | Additive feeder | Dosiervorrichtung Zusatzmittel | Dosatore additivi |
| D.T. | Display/Teclado | Écran/Clavier | Display/Keyboard | Display/Tastatur | Display/Tastiera |
| e1 = | Electro válvula agua Fria. | Électrovanne eau Froide | Cold water electrically operated valve | Elektroventil Kaltwasser | Elettrovalvola acqua Fredda |
| e2 = | Electro válvula agua Caliente | Électrovanne eau Chaude | Hot water electrically operated valve | Elektroventil Warmwasser | Elettrovalvola acqua Calda |
| e3 = | Electro válvula Prelavado. | Électrovanne Prélavage | Pre-wash electrically operated valve | Elektroventil Vorwaschen | Elettrovalvola Prelavaggio |
| e4 = | Electro válvula Lavado. | Électrovanne Lavage | Wash electrically operated valve | Elektroventil Hauptwaschgang | Elettrovalvola Lavaggio |
| e5 = | Electro válvula Lejía. | Électrovanne Eau de Javel | Bleach electrically operated valve. | Elektroventil Bleiche | Elettrovalvola Candeggina |
| e6 = | Electro válvula Suavizante. | Électrovanne Assouplissant | Fabric softener electrically operated valve | Elektroventil Weichspüler | Elettrovalvola Ammorbidente |
| e7 = | Electro válvula agua Descalcificada | Électrovanne eau Adoucie | Delimed water electrically operated valve | Elektroventil entkalktes Wasser | Elettrovalvola acqua Decalcificata |
| e8 ,9,10 = | Electro válvula Equilibrado | Électrovanne Équilibrage | Balancer electrically operated valve | Elektroventil Gleichgewicht | Elettrovalvola Bilanciamento |
| e11 = | Electro válvula Vapor. | Électrovanne Vapeur | Steam electrically operated valve | Elektroventil Dampf | Equilibrado Vapore |
| EP = | Electroimán de Puerta. | Électro-aimant de Porte | Door electric magnet | Elektromagnet Gerätetür | Elettromagnete Porta |
| FI = | Filtro de Interferencias. | Filtre Anti-parasites | Interference filter | Störungsfilter | Filtro Interferenze |
| F = | Fusible. | Fusible | Fuse | Sicherung | Fusibile |
| G1,G2 = | Galga Sensor. | Jauge Capteur | Sensing gage | Meßsensor | Calibro Sensore |
| IE = | Pulsador Parada de emergencia. | Bouton-poussoir Arrêt d'urgence | Emergency stop push button | Not-Aus-Taster | Pulsante Arresto di emergenza |
| IG = | Interruptor general. | Interrupteur général | General switch | Hauptschalter | Interruttore generale |
| IGS = | Interruptor General de seguridad. | interrupteur Général de sécurité | General safety switch | Sicherheitshauptschalter | Interruttore Generale di sicurezza |
| Ides = | Interruptor de desequilibrio. | Interrupteur de balourd | Unbalance switch | Ungleichgewichtsschalter | Interruttore di squilibrio |
| IMo = | Interruptor Monedero. | Interrupteur Monnayeur | Coin slote switch | Münzschalter | Interruttore Portamonete |
| Ip = | Interruptor puerta Cerrada. | Interrupteur porte Fermée | Closed door switch | Schalter Tür geschlossen | Interruttore porta Chiusa |
| Ipb = | Interruptor puerta bloqueada. | Interrupteur porte verrouillée | Door lock switch | Schalter Tür verriegelt | Interruttore porta bloccata |
| Isc | Interruptor seguridad Temperatura | Thermostat Limiteur | Hi-limit Thermostat | Grenzthermostat | Termostato Limitatore |
| M = | Motor. | Moteur | Motor | Motor | Motore |
| Mo = | Monedero. | Monnayeur | Coin slot | Münzvorrichtung | Portamonete |
| NTC = | Sensor temperatura.. | Capteur température | Temperature sensor | Temperatursensor | Sensore temperatura |
| RT = | Resistencia Calentamiento. | Résistance Chauffe | Heating Resistors | Widerstand Aufheizung | Resistenza Riscaldamento |
| Tm = | Térmico de Motor. | Thermique du Moteur | Motor hot-wire | Motorwärmeschalter | Termico del Motore |
| Trf = | Transformador | Transformateur | Transformer | Transformator | Trasformatore |
| Trf s/N = | Transformador Versión sin Neutro. | Transformateur Version sans Neutre | Transformer Version without Neutral | Transformator Modell ohne Neutralstellung | Trasformatore Versione senza Neutro |
| VAC = | Válvula Vaciado | Vanne Vidange | Emptying valve | Ablassventil | Valvola Scarico |
| Ve = | Ventilador. | Ventilateur | Fan | Ventilator | Ventola |
| VF = | Convertidor de Frecuencia. | Convertisseur de Fréquence | Frequency converter | Frequenzumwandler | Convertitore di Frequenza |
| VM = | Ventilador Motor. | Ventilateur Moteur | Fan motor | Ventilator Motor | Ventola Motore |
| 1...8 = | Puntos conexión dosificadores. | Points raccordement doseurs | Feeder connection points | Anschlussstellen Dosiervorrichtungen | Punti connessione dosatori |
| **COLOR** | **COLORES** | **COULEURS** | **COLOUR** | **FARBEN** | **COLORE** |
| a = | Azul | Bleu | Blue | Blau | Blu |
| am = | Amarillo | Jaune | Yellow | Gelb | Giallo |
| am/ve = | Amarillo/verde | Jaune / vert | Yellow / green | Gelb/grün | Giallo/verde |
| b = | Blanco | Blanc | White | Weiß | Bianco |
| g = | Gris | Gris | Grey | Grau | Grigio |
| m = | Marrón | Marron | Brown | Braun | Marrone |
| n = | Negro | Noir | Black | Schwarz | Nero |
| na = | Naranja | Orange | Orange | Orange | Arancio |
| r = | Rojo | Rouge | Red | Rot | Rosso |
| rs = | Rosa | Rose | Pink | Rosa | Roseo |
| ve = | Verde | Vert | Green | Grün | Verde |
| vi = | Violeta | Violet | Purple | Violett | Viola |