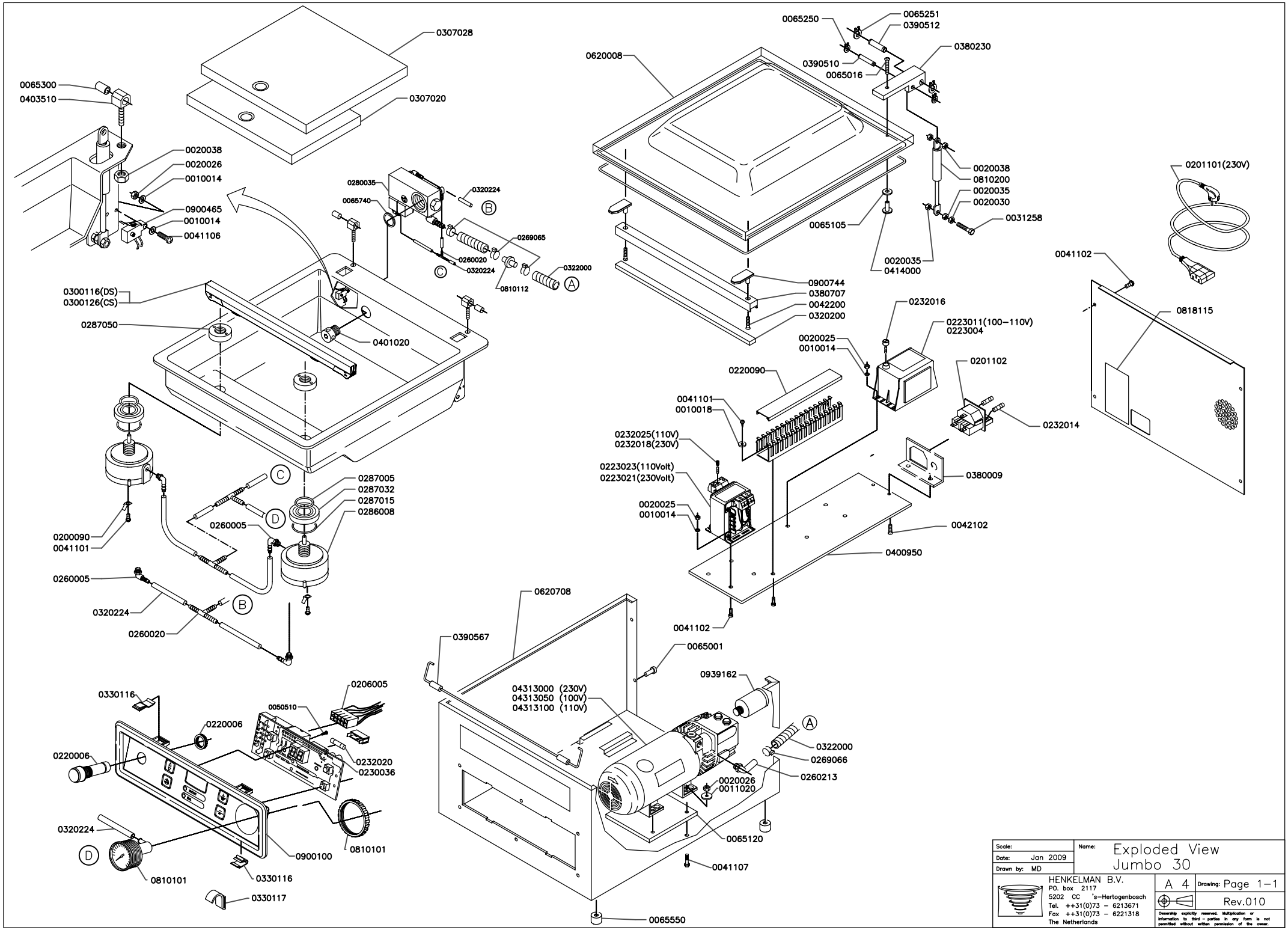

Scale:	Name:	Exploded View Jumbo 30
Date: Jan 2009		
Drawn by: MD		
HENKELMAN B.V. P.O. box 2117 5202 CC 's-Hertogenbosch Tel. ++31(0)73 – 6213671 Fax ++31(0)73 – 6221318 The Netherlands	A 4	Drawing: Page 1–1
		Rev.010

Ownership explicitly reserved. Multiplication or information to third – parties in any form is not permitted without written permission of the owner.