DESPIECE TECNICO

# Lavavajillas de apertura frontal
# Lave-vaisselle à ouverture frontale
# Front loading dishwasher
# Geschirrspülmaschinen mit frontbeladung
# Lavastoviglie ad apertura frontale
# Lava-louças de apertura frontal

**Modelos:**

**FI-64**
**FI-64 B**
**FI-64 C**
**FI-64 D**
**FI-64 W**
**FI-64 B-BT**
**FI-64 HY CLINIC**

***Junio 2009 June***

***Revisado Septiembre 2013 September Revised***

FAGOR

FAGOR INDUSTRIAL

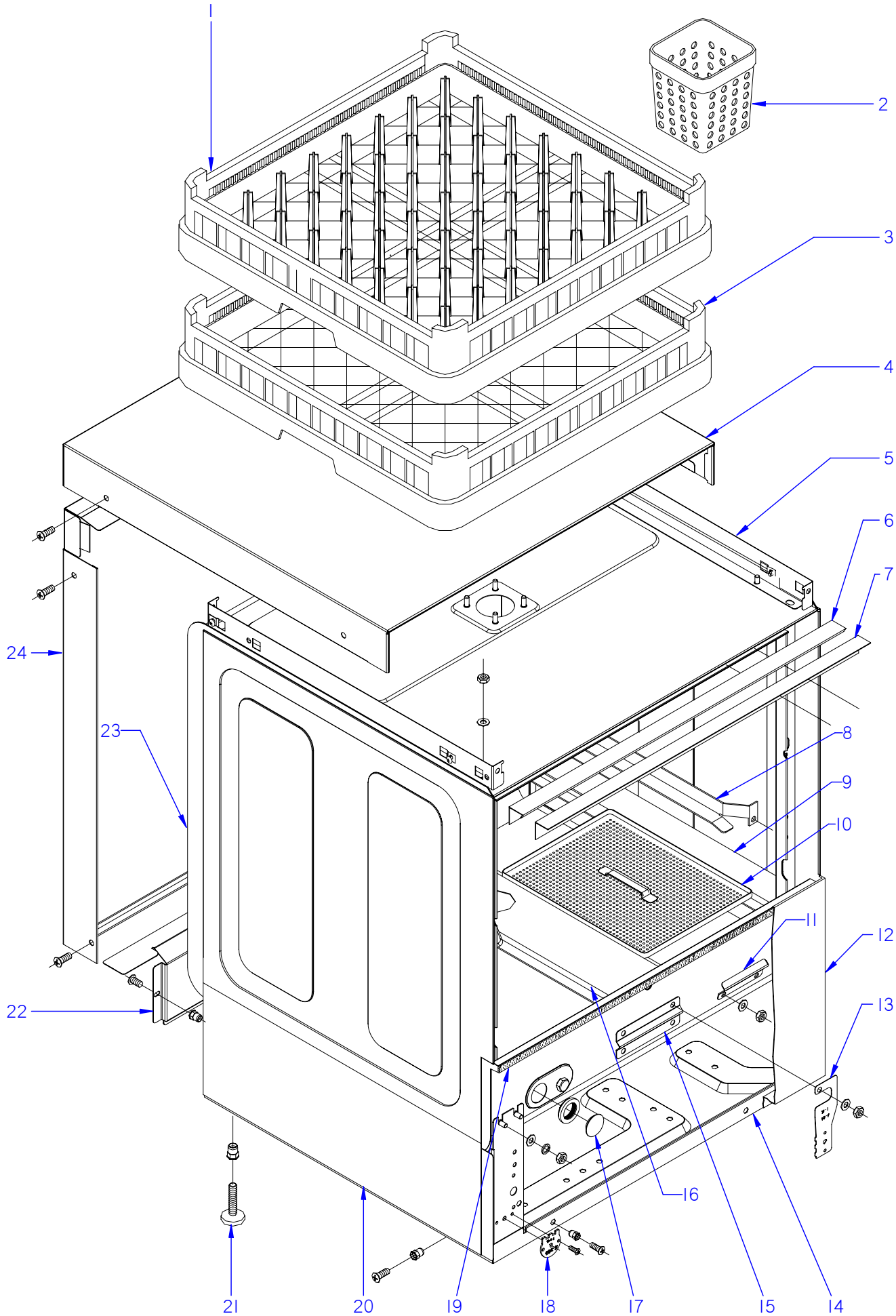


ITEM MARCADO EN COLOR = REPUESTO RECOMENDADO
COLOURED ITEM = RECOMMENDED SPARE PART

| N plano | Firma | Fecha | Aparato | MUEBLE | Lamina | |
|---|---|---|---|---|---|---|
| C-1843 | | 2007-06 | LAVAVAJILLAS FI-64 | | 1 | Fagor Industrial S.Coop. FAGOR Oñate |

| MOD. | LAVAVAJILLAS DE APERTURA FRONTAL<br>FRONT LOADING DISHWASHER | ZONA / ZONE | MUEBLE / FITTING | C-1843 |
|---|---|---|---|---|

| ITEM | CODIGO<br>CODE | DENOMINACION | NAME | FI-64 | FI-64 B | FI-64 C | FI-64 D | FI-64 W | FI-64 B-BT<br>UK | FI-64 HY<br>CLINIC | NOTAS |
|---|---|---|---|---|---|---|---|---|---|---|---|
| 1 | Z655302000 | CESTILLO PLATOS CP-16-18 | PLATE BASKET CP-16-18 | 1 | 1 | 1 | 1 | 1 | 1 | 1 | |
| 2 | Z655314000 | CESTILLO CUBIERTOS | CUTLERY BASKET | 4 | 4 | 4 | 4 | _ | 4 | 4 | |
| 3 | Z655301000 | CESTILLO BASE CT-10 | BASE BASKET CT-10 | 1 | 1 | 1 | 1 | 1 | 1 | 1 | |
| | Z209121000 | TOPE 50x50x80 | BUFFER 50x50x80 | 2 | 2 | 2 | 2 | 2 | 2 | 2 | |
| 4 | Z202906000 | TAPA T-CO. | COVER T-CO. | 1 | 1 | 1 | 1 | 1 | 1 | 1 | |
| | Q221342000 | REMACHE EXAGONAL M5 | HEXAGONAL RIVET M5 | 2 | 2 | 2 | 2 | 2 | 2 | 2 | |
| | Q152004000 | TORNIL, APLASTADO M5x13 A304 | FLAT HEADED BOLT M5x13 A304 | 2 | 2 | 2 | 2 | 2 | 2 | 2 | |
| | Q152004000 | TORNIL, APLASTADO M5x13 A304 | FLAT HEADED BOLT M5x13 A304 | 4 | 4 | 4 | 4 | 4 | 4 | 4 | |
| | Q221012000 | TUERCA RAPIDA M,5 | RAPID NUT M,5 | 4 | 4 | 4 | 4 | 4 | 4 | 4 | |
| | 3713500000 | PERFIL CUBREARISTAS PLASTICO | PLASTIC EDGE COVER PROFILE | 1 | 1 | 1 | 1 | 1 | 1 | 1 | |
| 5 | Z200329000 | ESCUADRA AMARRE TAPA AF | COVER FASTENING BRACKET AI | 2 | 2 | 2 | 2 | 2 | 2 | 2 | ELIMINADO 29.01.10 |
| 5 | Z200346000 | ESCUADRA AMARRE TAPA AF | COVER FASTENING BRACKET AI | 2 | 2 | 2 | 2 | 2 | 2 | 2 | INTRODUCIDO 29.01.10 |
| | Q162040000 | TUERCA EXAGONAL M6 | HEXAGONAL NUT M6 | 4 | 4 | 4 | 4 | 4 | 4 | 4 | |
| | Q232040000 | ARANDELA A6 | WASHER A6 | 4 | 4 | 4 | 4 | 4 | 4 | 4 | |
| | Q012073000 | TORNILLO EXAGONAL M12X20 | HEXAGONAL BOLT M12x20 | 2 | 2 | 2 | 2 | 2 | 2 | 2 | |
| | Q306024000 | JUNTA18X12.5X1.5 | SEAL 18X12.5X1.5 | 2 | 2 | 2 | 2 | 2 | 2 | 2 | |
| | Q162070000 | TUERCA EXAGONAL M12 | HEXAGONAL NUT M12 | 2 | 2 | 2 | 2 | 2 | 2 | 2 | |
| 6 | Z200315000 | PERFIL CAJA | BOX PROFILE | 1 | 1 | 1 | 1 | 1 | 1 | 1 | |
| 7 | Z200309000 | ESCUADRA SUJECCION PERFIL | FASTENING BRACKET PROFILE | 1 | 1 | 1 | 1 | 1 | 1 | 1 | |
| 8 | Z200305000 | GUIA CESTILLO DERECHO | RIGHT BASKET GUIDE | 1 | 1 | 1 | 1 | 1 | 1 | 1 | ELIMINADO 01.12.10 |
| 8 | Z200347000 | GUIA CESTILLO DERECHO | RIGHT BASKET GUIDE | 1 | 1 | 1 | 1 | 1 | 1 | 1 | INTRODUCIDO 01.12.10 |
| S/Nº | Z200306000 | GUIA CESTILLO IZQUIERDO | LEFT BASKET GUIDE | 1 | 1 | 1 | 1 | 1 | 1 | 1 | ELIMINADO 01.12.10 |
| S/Nº | Z200348000 | GUIA CESTILLO IZQUIERDO | LEFT BASKET GUIDE | 1 | 1 | 1 | 1 | 1 | 1 | 1 | INTRODUCIDO 01.12.10 |
| | Q162040000 | TUERCA EXAGONAL M6 | WASHER A6 | 4 | 4 | 4 | 4 | 4 | 4 | 4 | |
| | Q232040000 | ARANDELA A6 | HEXAGONAL NUT M6 | 4 | 4 | 4 | 4 | 4 | 4 | 4 | |
| | Q012073000 | TORNIL. EXAGONAL M12x20 A.304 | HEXAGONAL BOLTm12x20 A.304 | 2 | 2 | 2 | 2 | 2 | 2 | 2 | |
| 9 | Z210805000 | SOPORTE DERECHO BANDEJAS | RIGHT TRAY SUPPORT | 1 | 1 | 1 | 1 | 1 | 1 | 1 | |
| S/Nº | Z210806000 | SOPORTE IZDQUIERD. BANDEJAS | LEFT TRAY SUPPORT | 1 | 1 | 1 | 1 | 1 | 1 | 1 | |
| | Q162040000 | TUERCA EXAGONAL M6 | HEXAGONAL NUT M6 | 4 | 4 | 4 | 4 | 4 | 4 | 4 | |
| | Q232040000 | ARANDELA A6 | WASHER A6 | 4 | 4 | 4 | 4 | 4 | 4 | 4 | |
| | | | | | | | | | | | |

| MOD. | LAVAVAJILLAS DE APERTURA FRONTAL<br>FRONT LOADING DISHWASHER | ZONA / ZONE | MUEBLE / FITTING | C-1843 |
|---|---|---|---|---|

| ITEM | CODIGO<br>CODE | DENOMINACION | NAME | FI-64 | FI-64 B | FI-64 C | FI-64 D | FI-64 W | FI-64 B-BTUK | FI-64 HY<br>CLINIC | NOTAS |
|---|---|---|---|---|---|---|---|---|---|---|---|
| 10 | Z210801000 | BANDEJA COMPLETA | COMPLETE TRAY | 4 | 4 | 4 | 4 | 4 | 4 | 4 | ELIMINADO 05.06.08 |
| 10 | Z210802000 | BANDEJA COMPLETA | COMPLETE TRAY | 4 | 4 | 4 | 4 | 4 | 4 | 4 | INTRODUCIDO 05.06.08 |
| 11 | Z431701000 | CHAPA TERMOMETRO W | THERMOMETER PLATE W | _ | _ | _ | _ | 1 | _ | _ | |
| | Q012073000 | TORNILLO EXAGONAL M12X20 | HEXAGONAL BOLT M12x20 | _ | _ | _ | _ | 2 | _ | _ | |
| | Q162070000 | TUERCA EXAGONAL M12 | HEXAGONAL NUT M12 | _ | _ | _ | _ | 2 | _ | _ | |
| | Q306024000 | JUNTA 18x12,5x1,5 | SEAL 18x12.5x1.5 | _ | _ | _ | _ | 2 | _ | _ | |
| 12 | Z202913000 | PANEL FRONTAL SIN PUERTA | FRONT PANEL WITHOUT DOOR | 1 | _ | _ | 1 | _ | _ | _ | |
| 12 | Z228812000 | PANEL FRONTAL B SIN PUERTA | FRONT PANEL B WITHOUT DOO | _ | 1 | 1 | _ | 1 | 1 | 1 | |
| | Q152004000 | TORNIL, APLASTADO M5x13 A304 | FLAT HEADED BOLT M5x13 A304 | 2 | 2 | 2 | 2 | 2 | 2 | 2 | |
| 13 | Z208435000 | SOPORTE W TERMOST. TANQUE | THERMOSTAT SUPPORT W TAN | _ | _ | _ | _ | 1 | _ | _ | ELIMINADO 10.12.2012 |
| 13 | 12043911 | REGULADOR Tª W AF 167ºF | REGULATOR Tª W AF 167ºF | _ | _ | _ | _ | 1 | _ | _ | INTRODUCIDO 10.12.2012 |
| | Q162040000 | TUERCA EXAGONAL M6 | HEXAGONAL NUT M6 | _ | _ | _ | _ | 4 | _ | _ | |
| | Q232040000 | ARANDELA A6 | WASHER A6 | _ | _ | _ | _ | 4 | _ | _ | |
| | Q262040000 | ARANDELA GROW. A6 A.304 | WASHER GROW. A6 A.304 | _ | _ | _ | _ | 4 | _ | _ | |
| 14 | Z200101000 | ARMAZON COMPLETO | COMPLETE FRAME | 1 | 1 | 1 | 1 | 1 | 1 | 1 | |
| 15 | Z748008000 | SOPORTE BULBO TERMOSTATO | THERMOSTAT BULB SUPPORT | _ | _ | _ | _ | 1 | _ | _ | |
| | Q162040000 | TUERCA EXAGONAL M6 | HEXAGONAL NUT M6 | _ | _ | _ | _ | 2 | _ | _ | |
| | Q232040000 | ARANDELA A6 | WASHER A6 | _ | _ | _ | _ | 2 | _ | _ | |
| | Q262040000 | ARANDELA GROW. A6 A.304 | WASHER GROW. A6 A.304 | _ | _ | _ | _ | 2 | _ | _ | |
| 16 | Z210804000 | SOPORTE CENTRAL BANDEJAS | CENTRAL TRAY SUPPORT | 1 | 1 | 1 | 1 | 1 | 1 | 1 | |
| 17 | P443060000 | TAPON | COVER | _ | _ | _ | _ | 1 | _ | _ | |
| | N503017000 | SOPORTE TERMOSTATO 1001713 | THERMOSTAT SUPPORT 100171 | _ | _ | _ | _ | 1 | _ | _ | |
| 18 | Z718446000 | CHAPA W 85ºC | PLATE W 85ºC | _ | _ | _ | _ | 1 | _ | _ | ELIMINADO 30,10,12 |
| 19 | Z200313000 | PERFIL GOMA ESPONJOSA | FOAM RUBBER PROFILE | 1 | 1 | 1 | 1 | 1 | 1 | 1 | |
| 20 | Z202903000 | PANEL LATERAL IZQUIERDO | LEFT SIDE PANEL | 1 | 1 | 1 | 1 | 1 | 1 | 1 | |
| | Q152004000 | TORNIL, APLASTADO M5x13 A304 | FLAT HEADED BOLT M5x13 A304 | 2 | 2 | 2 | 2 | 2 | 2 | 2 | |
| S/Nº | Z202902000 | PANEL LATERAL DERECHO | RIGHT SIDE PANEL | 1 | 1 | 1 | 1 | 1 | 1 | 1 | |
| | Q152004000 | TORNIL, APLASTADO M5x13 A304 | FLAT HEADED BOLT M5x13 A304 | 2 | 2 | 2 | 2 | 2 | 2 | 2 | |
| 21 | Z200107000 | PATA REGULABLE | ADJUSTABLE LEG | 4 | 4 | 4 | 4 | 4 | 4 | 4 | |
| 22 | Z202921000 | PANEL POSTERIOR INFERIOR | REAR LOWER PANEL | 1 | 1 | 1 | 1 | 1 | _ | _ | |
| 22 | Z258941000 | PANEL POSTERIOR INFERIOR B.T. | REAR LOWER PANEL L.V. | _ | _ | _ | _ | _ | 1 | 1 | |

| MOD. | LAVAVAJILLAS DE APERTURA FRONTAL<br>FRONT LOADING DISHWASHER | ZONA / ZONE | MUEBLE / FITTING | C-1843 |
|---|---|---|---|---|

| ITEM | CODIGO<br>CODE | DENOMINACION | NAME | FI-64 | FI-64 B | FI-64 C | FI-64 D | FI-64 W | FI-64 B-BTUK | FI-64 HY<br>CLINIC | NOTAS |
|---|---|---|---|---|---|---|---|---|---|---|---|
| 23 | Z208730000 | CAJA SOLDADA | WELDED BOX | 1 | 1 | _ | _ | _ | _ | _ | |
| 23 | Z208412000 | CAJA SOLDADA W | WELDED BOX W | _ | _ | 1 | _ | 1 | _ | _ | |
| 23 | Z210352000 | CAJA SOLDADA D | WELDED BOX D | _ | _ | _ | 1 | _ | _ | _ | |
| 23 | Z207402000 | CAJA SOLDADA CLINIC LINE | WELDED BOX CLINIC LINE | _ | _ | _ | _ | _ | 1 | 1 | |
| | Q162040000 | TUERCA EXAGONAL M6 | HEXAGONAL NUT M6 | 8 | 8 | 8 | 8 | 8 | 8 | 8 | |
| | Q302022000 | ARANDELA 16X6X1.2 A.304 | WASHER 16X6X1.2 A.304 | 8 | 8 | 8 | 8 | 8 | 8 | 8 | |
| | Q262040000 | ARANDELA GROW. A6 A.304 | WASHER GROW. A6 A.304 | 8 | 8 | 8 | 8 | 8 | 8 | 8 | |
| | Q152018000 | PERNO M6x10 | BOLT M6x10 | _ | _ | _ | _ | 4 | 1 | 1 | |
| 24 | Z202904000 | PANEL POSTERIOR ALU.FI-30 | ALU.FI-30 REAR PANEL | 1 | 1 | 1 | 1 | 1 | 1 | 1 | |
| | Q152004000 | TORNIL, APLASTADO M5x13 A304 | FLAT HEADED BOLT M5x13 A304 | 4 | 4 | 4 | 4 | 4 | 4 | 4 | |

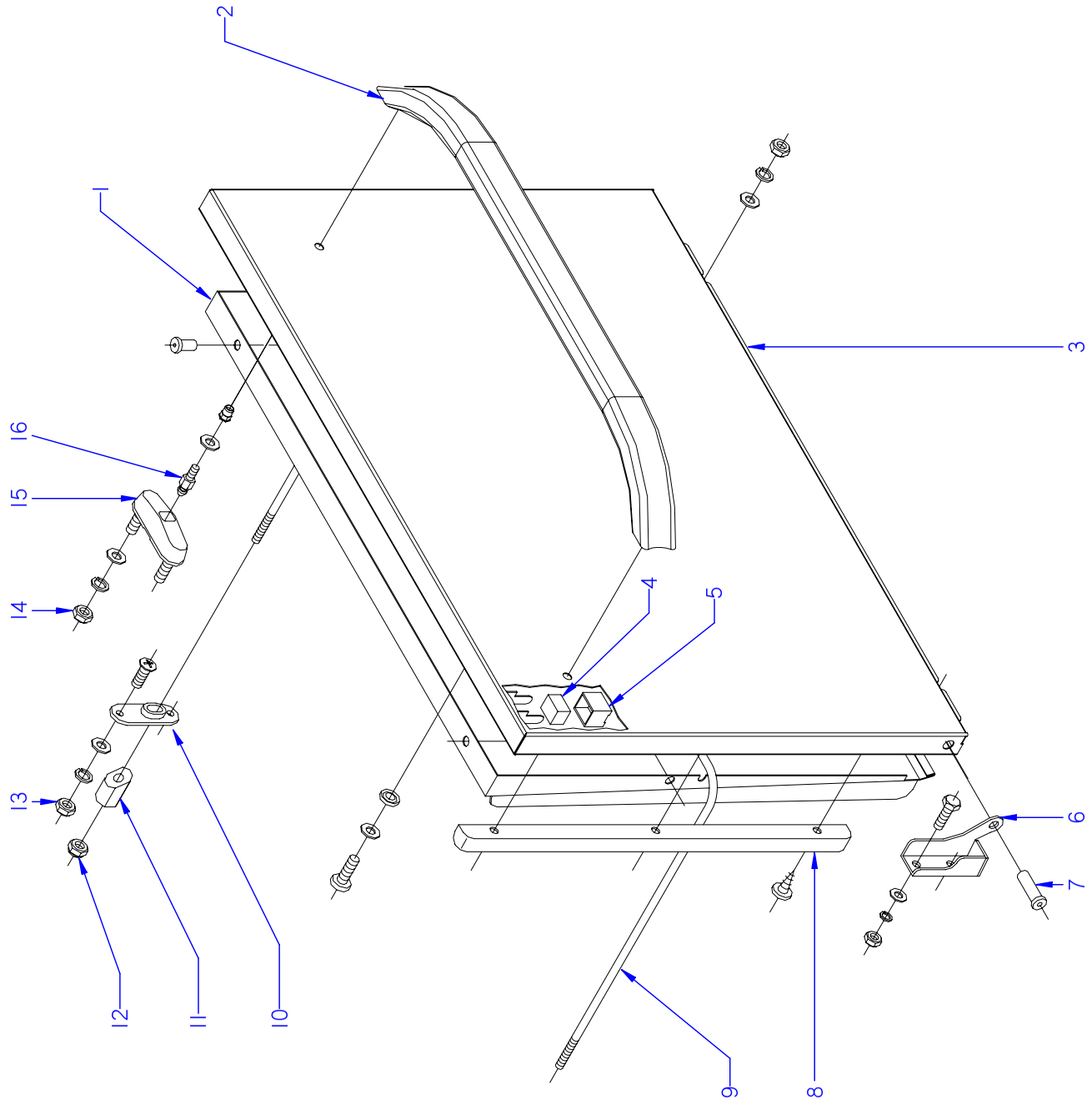


ITEM MARCADO EN COLOR = REPUESTO RECOMENDADO
COLOURED ITEM = RECOMMENDED SPARE PART

| N plano | Firma | Fecha | Aparato | | Lamina | |
|---|---|---|---|---|---|---|
| C-1844 | | 2007-06 | PUERTA<br>LAVAVAJILLAS FI-64 | | 2 | Fagor Industrial S.Coop.<br>Oñate |

| MOD. | LAVAVAJILLAS DE APERTURA FRONTAL<br>FRONT LOADING DISHWASHER | ZONA / ZONE | PUERTA / DOOR | C-1844 |
|---|---|---|---|---|

| ITEM | CODIGO<br>CODE | DENOMINACION | NAME | FI-64 | FI-64 B | FI-64 C | FI-64 D | FI-64 W | FI-64 B-BTUK | FI-64 HY<br>CLINIC | NOTAS |
|---|---|---|---|---|---|---|---|---|---|---|---|
| | **1200005030** | **KIT PUERTA LAVAJILLAS FI 64** | **DOOR KIT FI 64 DISHWASHER** | **1** | **1** | **1** | **1** | **1** | **1** | **1** | |
| 1 | Z200545000 | CONTRAPUERTA SOLDADA | WELDED COUNTERDOOR | 1 | 1 | 1 | 1 | 1 | 1 | 1 | ELIMINADO 13.06.08 |
| 1 | Z200556000 | CONTRAPUERTA SOLDADA | WELDED COUNTERDOOR | 1 | 1 | 1 | 1 | 1 | 1 | 1 | INTRODUCIDO 13.06.08 |
| | Q412000000 | REMACHE TUBULAR 4 x 8 | TUBULAR RIVET 4 x 8 | 4 | 4 | 4 | 4 | 4 | 4 | 4 | |
| | Q232030000 | ARANDELA A5 | WASHER A5 | 2 | 2 | 2 | 2 | 2 | 2 | 2 | |
| | Q162030000 | TUERCA EXAGONAL M5 | HEXAGONAL NUT M5 | 2 | 2 | 2 | 2 | 2 | 2 | 2 | |
| | Q262030000 | ARANDELA GROW. A5 A.304 | WASHER GROW. A5 A.304 | 2 | 2 | 2 | 2 | 2 | 2 | 2 | |
| 2 | Z200551000 | ASA PUERTA | DOOR HANDLE | 1 | 1 | 1 | 1 | 1 | 1 | 1 | |
| 3 | Z218005000 | PUERTA SOLDADA | WELDED DOOR | 1 | 1 | 1 | 1 | 1 | 1 | 1 | |
| 4 | Z200506000 | IMAN | MAGNET | 1 | 1 | 1 | 1 | 1 | 1 | 1 | |
| 5 | Z200507000 | PROTECTOR IMAN | MAGNET PROTECTOR | 1 | 1 | 1 | 1 | 1 | 1 | 1 | |
| 6 | Z400514000 | BISAGRA IZQUIERDA T-C. | LEFT HINGE T-C. | 1 | 1 | 1 | 1 | 1 | 1 | 1 | |
| | Q012042000 | TORNIL. EXAGONAL M6X15 A.304 | HEXAGONAL BOLT M6X15 A.304 | 2 | 2 | 2 | 2 | 2 | 2 | 2 | |
| | Q232040000 | ARANDELA A6 | WASHER A6 | 2 | 2 | 2 | 2 | 2 | 2 | 2 | |
| | Q262040000 | ARANDELA GROW. A6 A.304 | WASHER GROW. A6 A.304 | 2 | 2 | 2 | 2 | 2 | 2 | 2 | |
| | Q162040000 | TUERCA EXAGONAL M6 | HEXAGONAL NUT M6 | 1 | 1 | 1 | 1 | 1 | 1 | 1 | |
| S/Nº | Z400515000 | BISAGRA DERECHA T-C. | RIGHT HINGE T-C. | 1 | 1 | 1 | 1 | 1 | 1 | 1 | |
| | Q012042000 | TORNIL. EXAGONAL M6X15 A.304 | HEXAGONAL BOLT M6X15 A.304 | 2 | 2 | 2 | 2 | 2 | 2 | 2 | |
| | Q232040000 | ARANDELA A6 | WASHER A6 | 2 | 2 | 2 | 2 | 2 | 2 | 2 | |
| | Q262040000 | ARANDELA GROW. A6 A.304 | WASHER GROW. A6 A.304 | 2 | 2 | 2 | 2 | 2 | 2 | 2 | |
| | Q162040000 | TUERCA EXAGONAL M6 | HEXAGONAL NUT M6 | 1 | 1 | 1 | 1 | 1 | 1 | 1 | |
| 7 | Z400516000 | EJE PUERTA | DOOR SHAFT | 2 | 2 | 2 | 2 | 2 | 2 | 2 | |
| 8 | Z200524000 | MARCO PUERTA | DOOR FRAME | 2 | 2 | 2 | 2 | 2 | 2 | 2 | |
| | Q412000000 | REMACHE TUBULAR 4 x 8 | TUBULAR RIVET 4 x 8 | 6 | 6 | 6 | 6 | 6 | 6 | 6 | |
| | Q032041000 | TORNILLO ALOMADO M6X10 | CURVED SCREW M6x10 | 2 | 2 | 2 | 2 | 2 | 2 | 2 | |
| | Q308002000 | ARANDELA DUBO A6 NYLON | WASHER DUBO A6 NYLON | 2 | 2 | 2 | 2 | 2 | 2 | 2 | |
| 9 | Z200521000 | VARILLA TENSOR | TENSIONING ROD | 1 | 1 | 1 | 1 | 1 | 1 | 1 | ELIMINADO 13.06.08 |
| 9 | Z200555000 | VARILLA TENSOR | TENSIONING ROD | 1 | 1 | 1 | 1 | 1 | 1 | 1 | INTRODUCIDO 13.06.08 |
| 10 | Z200310000 | SOPORTE TENSOR | TENSOR SUPPORT | 2 | 2 | 2 | 2 | 2 | 2 | 2 | |
| 11 | Z200522000 | TENSOR PUERTA | DOOR TENSOR | 2 | 2 | 2 | 2 | 2 | 2 | 2 | |
| 12 | Q222012000 | TUERCA AUTOB. M6 | SELF-LOCK NUT M6 | 2 | 2 | 2 | 2 | 2 | 2 | 2 | |

| MOD. | LAVAVAJILLAS DE APERTURA FRONTAL<br>FRONT LOADING DISHWASHER | ZONA / ZONE | PUERTA / DOOR | C-1844 |
|---|---|---|---|---|

| ITEM | CODIGO<br>CODE | DENOMINACION | NAME | FI-64 | FI-64 B | FI-64 C | FI-64 D | FI-64 W | FI-64 B-BTUK | FI-64 HY<br>CLINIC | NOTAS |
|---|---|---|---|---|---|---|---|---|---|---|---|
| 13 | Q162030000 | TUERCA EXAGONAL M5 | HEXAGONAL NUT M5 | 4 | 4 | 4 | 4 | 4 | 4 | 4 | |
| | Q152004000 | TORNIL, APLASTADO M5x13 A304 | FLAT HEADED BOLT M5x13 A304 | 4 | 4 | 4 | 4 | 4 | 4 | 4 | |
| | Q232030000 | ARANDELA A5 | WASHER A5 | 4 | 4 | 4 | 4 | 4 | 4 | 4 | |
| | Q262030000 | ARANDELA GROW. A5 A.304 | WASHER GROW. A5 A.304 | 4 | 4 | 4 | 4 | 4 | 4 | 4 | |
| 14 | Q222012000 | TUERCA AUTOB. M6 | SELF-LOCK NUT M6 | 4 | 4 | 4 | 4 | 4 | 4 | 4 | |
| 15 | Z200607000 | CONJUNTO CIERRE PUER.T-CO | LOCK UNIT DOOR T-CO | 2 | 2 | 2 | 2 | 2 | 2 | 2 | |
| 16 | Z200601000 | ENGANCHE CIERRE | LOCK LATCH | 2 | 2 | 2 | 2 | 2 | 2 | 2 | |
| | Q232030000 | ARANDELA A5 | WASHER A5 | 2 | 2 | 2 | 2 | 2 | 2 | 2 | |

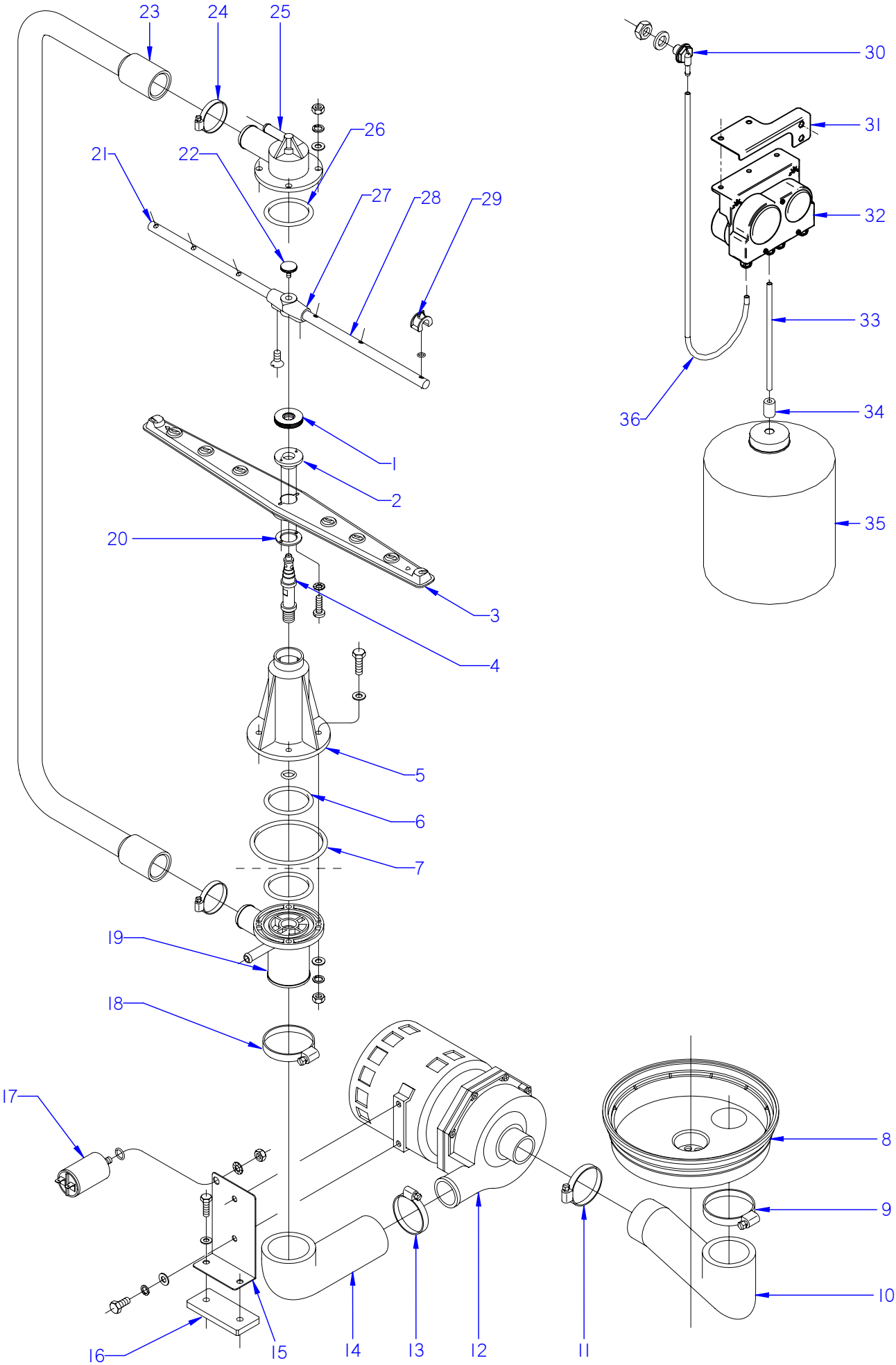


ITEM MARCADO EN COLOR = REPUESTO RECOMENDADO
COLOURED ITEM = RECOMMENDED SPARE PART

| N plano | Firma | Fecha | Aparato | | Lamina | |
|---|---|---|---|---|---|---|
| C-1845 | | 2007-06 | PARTE FUNCIONAL DE LAVADO | LAVAVAVAJILLAS FI-64 | 3 | Fagor Industrial S.Coop. FAGOR Oñate |

| MOD. | LAVAVAJILLAS DE APERTURA FRONTAL<br>FRONT LOADING DISHWASHER | ZONA / ZONE | PARTE FUNCIONAL LAVADO<br>WASH FUNCTIONAL PART | C-1845 |
|---|---|---|---|---|

| ITEM | CODIGO CODE | DENOMINACION | NAME | FI-64 | FI-64 B | FI-64 C | FI-64 D | FI-64 W | FI-64 B-BTUK | FI-64 HY CLINIC | NOTAS |
|---|---|---|---|---|---|---|---|---|---|---|---|
| 1 | Z200705000 | TUERCA ESPECIAL M.14X1 | SPECIAL NUT M.14X1 | 2 | 2 | 2 | 2 | 2 | 2 | 2 | |
| 2 | Z650704000 | ENGANCHE DISTRIBUIDOR | DISTRIBUTOR CATCH | 2 | 2 | 2 | 2 | 2 | 2 | 2 | ELIMINADO 11.02.2013 |
| 2 | 12045103 | ENGANCHE DISTRIBUIDOR | DISTRIBUTOR CATCH | 2 | 2 | 2 | 2 | 2 | 2 | 2 | INTRODUCIDO 11.02.2013 |
| 3 | Z650716000 | DISTRIBUIDOR MONTADO | DISTRIBUTOR MOUNTED | 2 | 2 | 2 | 2 | 2 | 2 | 2 | |
| 4 | Z200704000 | EJE CENTRAL | CENTRAL SHAFT | 2 | 2 | 2 | 2 | 2 | 2 | 2 | |
| 5 | Z200701000 | SOPORTE DISTRIBUID. INFERIOR | LOWER DISTRIBUTOR SUPPORT | 1 | 1 | 1 | 1 | 1 | 1 | 1 | |
| | Q307050000 | JUNTA TOR.13.94X19.18X2.6 | O-RING 13.94X19.18X2.6 | 1 | 1 | 1 | 1 | 1 | 1 | 1 | |
| | Q012046000 | TORNIL. EXAGONAL M6X40 A.304 | HEXAGONAL BOLT M6X40 A.304 | 4 | 4 | 4 | 4 | 4 | 4 | 4 | |
| | Q306050000 | ARANDELA Ø6X12X1.5 | WASHER Ø6X12X1.5 | 4 | 4 | 4 | 4 | 4 | 4 | 4 | |
| 6 | Q307052000 | JUNTA TOR.50.17X60.83X5.3 | O-RING 50.17X60.83X5.3 | 2 | 2 | 2 | 2 | 2 | 2 | 2 | |
| 7 | Q307049000 | JUNTA TOR.85.09X95.75X5.3 | O-RING 85.09X95.75X5.3 | 1 | 1 | 1 | 1 | 1 | 1 | 1 | |
| 8 | Z200906000 | CUBETA | TRAY | 1 | 1 | 1 | 1 | 1 | 1 | 1 | |
| 9 | Q881324000 | ABRAZADERA 50-70L | CLAMP 50-70L | 1 | 1 | 1 | 1 | 1 | 1 | 1 | |
| 10 | Z200904000 | CODO ASPIRACION 1003018 | EXTRACTOR ELBOW 1003018 | 1 | 1 | 1 | 1 | 1 | 1 | 1 | |
| 11 | Q881307000 | ABRAZADERA 40-60 | CLAMP 40-60 | 1 | 1 | 1 | 1 | 1 | 1 | 1 | |
| 12 | Z201011000 | BOMBA DE LAVADO | WASH PUMP | 1 | 1 | 1 | 1 | _ | 1 | 1 | |
| | Z201082000 | TURBINA PARA 50 HZ.88 MM | TURBINE 50 HZ.88 MM | 1 | 1 | 1 | 1 | _ | 1 | 1 | |
| | Z201081000 | CONJUNTO JUNTA Y RETEN | JOINT BOARD AND SEAL | 1 | 1 | 1 | 1 | _ | 1 | 1 | |
| 12 | Z203511000 | BOMBA DE LAVADO 60 HZ. | WASH PUMP 60 Hz. | 1 | 1 | 1 | 1 | 1 | 1 | 1 | |
| | Z201083000 | TURBINA 60 HZ.78 MM | TURBINE 60 HZ.78 MM | 1 | 1 | 1 | 1 | 1 | 1 | 1 | |
| | Z201081000 | CONJUNTO JUNTA Y RETEN | JOINT BOARD AND SEAL | 1 | 1 | 1 | 1 | 1 | 1 | 1 | |
| | Z203601000 | RESISTENCIA TANQUE | TANK RESISTOR | 1 | 1 | 1 | 1 | 1 | 1 | 1 | |
| 13 | Q881307000 | ABRAZADERA 40-60 | CLAMP 40-60 | 1 | 1 | 1 | 1 | 1 | 1 | 1 | |
| 14 | Z200905000 | CODO IMPULSION 1003017 | IMPULSE ELBOW 1003017 | 1 | 1 | 1 | 1 | 1 | 1 | 1 | |
| 15 | Z201002000 | SOPORTE MOTOBO.F-3-4-5-6 | MOTORPUMP SUPPORT F-3-4-5- | 1 | 1 | 1 | 1 | 1 | 1 | 1 | |
| 16 | Z201003000 | BASE BOMBA LAVADO 1003016 | WASH PUMP BASE 1003016 | 1 | 1 | 1 | 1 | 1 | 1 | 1 | |
| | Q012033000 | TORNIL. EXAGONAL M5X20 A.304 | HEXAGONAL BOLT M5X20 A.304 | 2 | 2 | 2 | 2 | 2 | 2 | 2 | |
| 17 | V321300000 | CONDENSADOR 10 M.F. | CONDENSER 10 M.F. | 1 | 1 | 1 | 1 | 1 | 1 | 1 | |
| | Q307048000 | JUNTA TORICA 9.12X16.18X3.53 | O-RING 9.12x16.18x3.53 | 1 | 1 | 1 | 1 | 1 | 1 | 1 | |
| | Q162050000 | TUERCA EXAGONAL M8x1 INOX. | HEXAGONAL NUT M8x1 INOX. | 1 | 1 | 1 | 1 | 1 | 1 | 1 | |
| | Q261050000 | ARANDELA MUELLE A8 | SPRING WASHER A8 | 1 | 1 | 1 | 1 | 1 | 1 | 1 | |

| MOD. | LAVAVAJILLAS DE APERTURA FRONTAL<br>FRONT LOADING DISHWASHER | ZONA / ZONE | PARTE FUNCIONAL LAVADO<br>WASH FUNCTIONAL PART | C-1845 |
|---|---|---|---|---|

| ITEM | CODIGO CODE | DENOMINACION | NAME | FI-64 | FI-64 B | FI-64 C | FI-64 D | FI-64 W | FI-64 B-BTUK | FI-64 HY CLINIC | NOTAS |
|---|---|---|---|---|---|---|---|---|---|---|---|
| 18 | Q881324000 | ABRAZADERA 50-70L | CLAMP 50-70L | 1 | 1 | 1 | 1 | 1 | 1 | 1 | |
| 19 | Z200703000 | PASAMUROS | BUSHING | 1 | 1 | 1 | 1 | 1 | 1 | 1 | |
| | Q232040000 | ARANDELA A6 | WASHER A6 | 4 | 4 | 4 | 4 | 4 | 4 | 4 | |
| | Q262040000 | ARANDELA GROW. A6 A.304 | WASHER GROW. A6 A.304 | 4 | 4 | 4 | 4 | 4 | 4 | 4 | |
| | Q162040000 | TUERCA EXAGONAL M6 | HEXAGONAL NUT M6 | 4 | 4 | 4 | 4 | 4 | 4 | 4 | |
| 20 | Z650711000 | AMARRE ENGANCHE DISTRIBUID. | DISTRIBUTOR HOOK FASTENING | 2 | 2 | 2 | 2 | 2 | 2 | 2 | |
| | Q152015000 | TORNILLO ALOMADO M3X6 | CURVED SCREW M3X6 | 4 | 4 | 4 | 4 | 4 | 4 | 4 | |
| | Q242010000 | ARANDELA ABANICO A.3 A304 | FAN WASHER A3 A304 | 4 | 4 | 4 | 4 | 4 | 4 | 4 | |
| 21 | Z201902000 | RAMA DE ACLARADO IZQUIERDA | LEFT RINSE BRANCH | 2 | 2 | 2 | 2 | 2 | 2 | 2 | |
| 22 | Q152016000 | TORNILLO ESPECIAL M.5X0.8 | SPECIAL BOLT M.5X0.8 | 2 | 2 | 2 | 2 | 2 | 2 | 2 | |
| 23 | Z200706000 | ARBOL DE LAVADO | WASH CAM | 1 | 1 | 1 | 1 | 1 | 1 | 1 | |
| 24 | Q881305000 | ABRAZADERA 25-40 | CLAMP 25-40 | 2 | 2 | 2 | 2 | 2 | 2 | 2 | |
| 25 | Z200707000 | SOPORTE DISTRIBUIDOR SUPER. | UPPER DISTRIBUTION SUPPORT | 1 | 1 | 1 | 1 | 1 | 1 | 1 | |
| | Q232040000 | ARANDELA A6 | WASHER A6 | 4 | 4 | 4 | 4 | 4 | 4 | 4 | |
| | Q162040000 | TUERCA EXAGONAL M6 | HEXAGONAL NUT M6 | 4 | 4 | 4 | 4 | 4 | 4 | 4 | |
| 26 | Q307052000 | JUNTA TOR.50.17X60.83X5.3 | O-RING 50.17X60.83X5.3 | 1 | 1 | 1 | 1 | 1 | 1 | 1 | |
| 27 | Z201903000 | SOPORTE RAMAS ACLARADO | RINSE BRANCH SUPPORT | 2 | 2 | 2 | 2 | 2 | 2 | 2 | |
| | Q042021000 | TORN. AVELLANADO M4X10 A.304 | HEXAGONAL COUNTERSUNK M4 | 4 | 4 | 4 | 4 | 4 | 4 | 4 | |
| 28 | Z201901000 | RAMA DE ACLARADO DERECHA | RIGHT RINSE BRANCH | 2 | 2 | 2 | 2 | 2 | 2 | 2 | |
| 29 | Z211903000 | TOBERA ACLARADO | RINSE NOZZLE | 12 | 12 | 12 | 12 | 12 | 12 | 12 | |
| 30 | Z230902000 | PASAMUROS DETERGENTE | DETERGENT WALL BUSHING | _ | _ | 1 | _ | 1 | 1 | 1 | ELIMINADO 17.07.09 |
| 30 | Z230905000 | PASAMUROS DETERGENTE INOX. | DETERGENT WALL BUSHING | _ | _ | 1 | _ | 1 | 1 | 1 | INTRODUCIDO 17.07.09 |
| 30 | Z208927000 | PASAMUROS DETERGENTE INOX | DETERGENT WALL BUSHING | _ | _ | 1 | _ | 1 | 1 | 1 | INTRODUCIDO 30.11.10 |
| | Q306024000 | JUNTA Ø18X12.5X1.5 | SEAL Ø18X12.5X1.5 | _ | _ | 1 | _ | 1 | 1 | 1 | |
| | Q162070000 | TUERCA EXAGONAL M12 | HEXAGONAL NUT M12 | _ | _ | 1 | _ | 1 | 1 | 1 | |
| 31 | Z208434000 | SOPORTE DOSIFICADOR W | DISPENSER SUPPORT W | _ | _ | 1 | _ | 1 | _ | _ | |
| | Q411304000 | REMACHE AVIBULB Ø4,8 | AVIBULB RIVET Ø4.8 | _ | _ | 2 | _ | 2 | _ | _ | |
| | Q221342000 | REMACHE EXAGONAL M5 | HEXAGONAL RIVET M5 | _ | _ | 2 | _ | 2 | _ | _ | |
| | Q012031000 | TORNIL.EXAGONAL M5X10 A.304 | HEX BOLT M5X10 A.304 | _ | _ | 2 | _ | 2 | _ | _ | |
| | Q232030000 | ARANDELA A5 | WASHER A5 | _ | _ | 2 | _ | 2 | _ | _ | |
| | Q162030000 | TUERCA EXAGONAL M5 | HEXAGONAL NUT M5 | _ | _ | 2 | _ | 2 | _ | _ | |

| MOD. | LAVAVAJILLAS DE APERTURA FRONTAL<br>FRONT LOADING DISHWASHER | ZONA / ZONE | PARTE FUNCIONAL LAVADO<br>WASH FUNCTIONAL PART | C-1845 |
|---|---|---|---|---|

| ITEM | CODIGO CODE | DENOMINACION | NAME | FI-64 | FI-64 B | FI-64 C | FI-64 D | FI-64 W | FI-64 B-BTUK | FI-64 HY CLINIC | NOTAS |
|---|---|---|---|---|---|---|---|---|---|---|---|
| 32 | Z208903000 | DOSIFIC. DGTE REGULABLE G300 | DETERGENT DISP. ADJUST. G30 | _ | _ | 1 | _ | 1 | _ | _ | |
| 32 | Z208903000 | DOSIFIC. DGTE REGULABLE G300 | DETERGENT DISP. ADJUST. G30 | _ | _ | _ | _ | _ | 1 | 1 | ELIMINADO 01.02.08 |
| 32 | Z208915000 | DOSIFIC. DGTE ABRILLANTADOR | DETERGENT DISP. POLISHER | _ | _ | _ | _ | _ | 1 | 1 | INTRODUCIDO 01.02.08 |
| 33 | Z448614000 | CONDUCTO ASPIRACIÓN | EXTRACTOR PIPE | _ | _ | 1 | _ | 1 | 1 | 1 | |
| 33 | Z448618000 | CONDUCTO ABRILLANTADOR | CROCKERY POLISHER PIPE | _ | _ | _ | _ | _ | 1 | 1 | INTRODUCIDO 31.07.07 |
| S/Nº | Z448616000 | PEGATINA TOMA DETERGENTE | DETERGENT INTAKE LABEL | _ | _ | 1 | _ | 1 | 1 | 1 | |
| 34 | Z701152000 | PESO FILTRO | FILTER WEIGHT | _ | _ | 1 | _ | 1 | 1 | 1 | |
| 35 | - | GARRAFA DETERGENTE | DETERGENT CONTAINER | _ | _ | 1 | _ | 1 | 1 | 1 | |
| 36 | 3699300000 | CONDUCTO DOSIFICAFOR TRANS. | CONDUIT | _ | _ | 1 | _ | 1 | 1 | 1 | |
| S/Nº | Z208904000 | CABLEADO DOSIFICADOR DTGTE | DETERGENT DISP. WIRING | _ | _ | 1 | _ | 1 | 1 | 1 | |

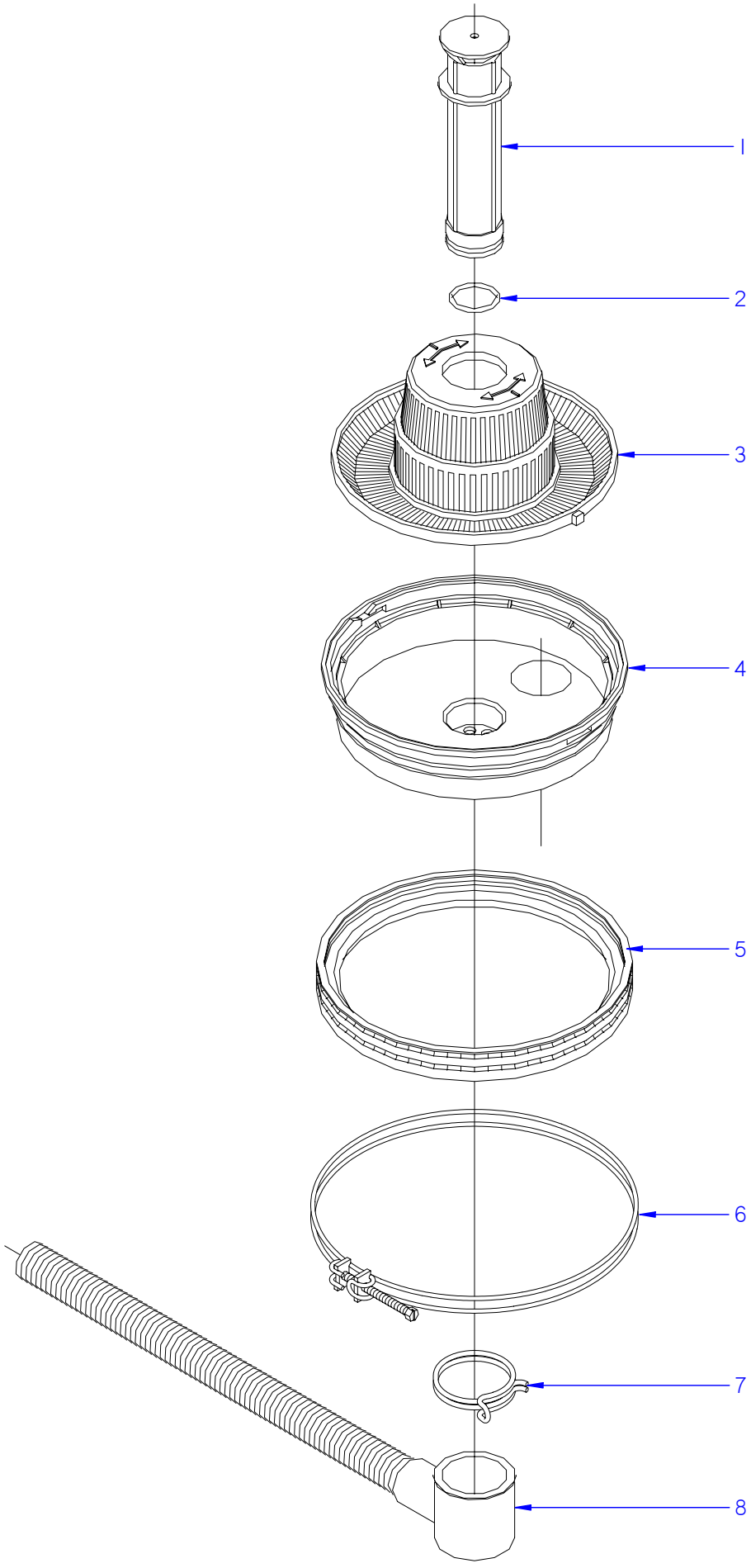


ITEM MARCADO EN COLOR = REPUESTO RECOMENDADO
COLOURED ITEM = RECOMMENDED SPARE PART

| N plano | Firma | Fecha | Aparato | Lamina | |
|---|---|---|---|---|---|
| C-1846 | | 2007-06 | PARTE FUNCIONAL DESAGUE<br>LAVAVAJILLAS FI-64; FI-64 D | 4 | Fagor Industrial S.Coop. FAGOR<br>Oñate |

| MOD. | LAVAVAJILLAS DE APERTURA FRONTAL<br>FRONT LOADING DISHWASHER | ZONA / ZONE | PARTE FUNCIONAL DESAGÜE<br>DRAINAGE FUNCTIONAL PART | PLANO<br>DIAGRAM | C-1846 |
|---|---|---|---|---|---|

| ITEM | CODIGO<br>CODE | DENOMINACION | NAME | FI-64 | FI-64 D | | | | | | NOTAS |
|---|---|---|---|---|---|---|---|---|---|---|---|
| 1 | Z200909000 | ALIVIADERO | OVERFLOW | 1 | 1 | | | | | | |
| 2 | Q307051000 | JUNTA TOR.36.17X41.41X2.6 | O-RING 36.17X41.41X2.6 | 1 | 1 | | | | | | |
| 3 | Z200922000 | CONJUNTO FILTRO AF. | AF FILTER UNIT. | 1 | 1 | | | | | | |
| 4 | Z200906000 | CUBETA | TRAY | 1 | 1 | | | | | | |
| 5 | Z200907000 | JUNTA CUBETA | TRAY SEAL | 1 | 1 | | | | | | |
| 6 | Z200908000 | ABRAZADERA CUBETA COMPL. | COMPL. TRAY CLAMP | 1 | 1 | | | | | | |
| 7 | Q901308000 | ABRAZAD. ELAST. 56-58.8 | ELAST. CLAMP 56-58.8 | 1 | 1 | | | | | | |
| 8 | Z200910000 | MANGUERA DESAGUE | DRAINAGE HOSE | 1 | 1 | | | | | | |

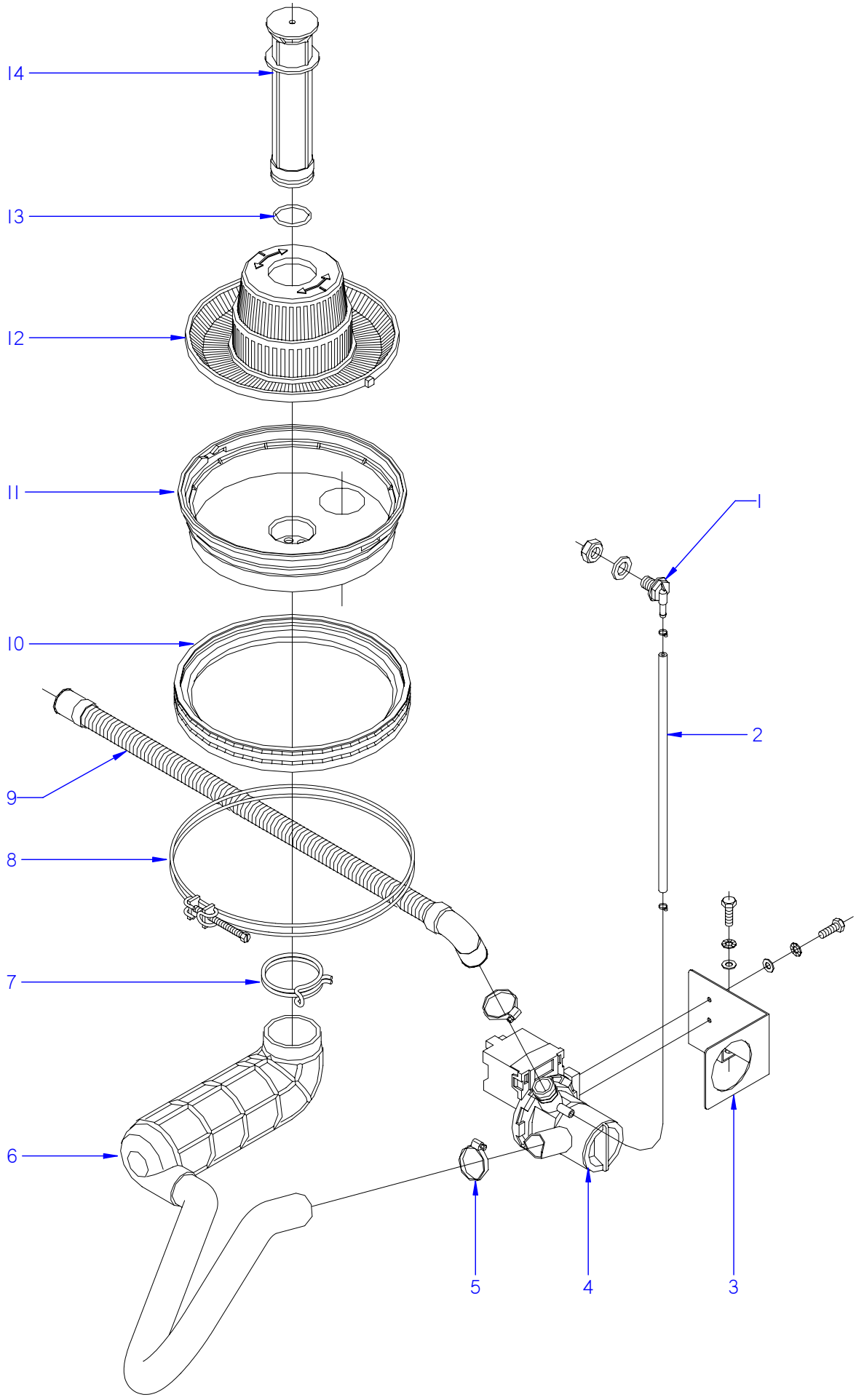


ITEM MARCADO EN COLOR = REPUESTO RECOMENDADO
COLOURED ITEM = RECOMMENDED SPARE PART

| N plano | Firma | Fecha | Aparato | PARTE FUNCIONAL DESAGUE | Lamina | |
|---|---|---|---|---|---|---|
| C-1847 | | 2007-06 | LAVAV. FI-64B; C; CLINIC; B-BTUK; W | | 5 | Fagor Industrial S.Coop. FAGOR Onate |

| MOD. | LAVAVAJILLAS DE APERTURA FRONTAL<br>FRONT LOADING DISHWASHER | ZONA / ZONE | PARTE FUNCIONAL DESAGÜE<br>DRAINAGE FUNCTIONAL PART | PLANO<br>DIAGRAM | C-1847 |
|---|---|---|---|---|---|

| ITEM | CODIGO<br>CODE | DENOMINACION | NAME | FI-64 B | FI-64 C | FI-64 W | FI-64 B-BTUK | FI-64 HY<br>CLINIC | | | NOTAS |
|---|---|---|---|---|---|---|---|---|---|---|---|
| 1 | Z230902000 | PASAMUROS DETERGENTE | DETERGENT WALL BUSHING | 1 | 1 | 1 | 1 | 1 | | | ELIMINADO 17.07.09 |
| 1 | Z230905000 | PASAMUROS DETERGENTE INOX. | DETERGENT WALL BUSHING | 1 | 1 | 1 | 1 | 1 | | | INTRODUCIDO 17.07.09 |
| | Q306024000 | JUNTA Ø18X12.5X1.5 | SEAL 18X12.5X1.5 | 1 | 1 | 1 | 1 | 1 | | | ELIMINADO 12.04.2013 |
| | 12010191 | JUNTA 14X24X3 | SEAL 14X24X3 | 1 | 1 | 1 | 1 | 1 | | | INTRODUCIDO 12.04.2013 |
| | Q162070000 | TUERCA EXAGONAL M12 | HEXAGONAL NUT M12 | 1 | 1 | 1 | 1 | 1 | | | |
| 2 | 3702400000 | TUBO GOMA NEGRO Ø 8*4 | BLACK RUBBER PIPE Ø 8*4 | 1 | 1 | 1 | 1 | 1 | | | |
| | P102154000 | BRIDA ELASTICA TUBO | ELASTIC PIPE FLANGE | 2 | 2 | 2 | 2 | 2 | | | |
| 3 | Z220904000 | SOPORTE BOMBA DESAGUE | DRAINAGE PUMP SUPPORT | 1 | 1 | 1 | 1 | 1 | | | |
| | Q012031000 | TORNIL.EXAGONAL M5X10 A.304 | HEX BOLT M5X10 A.304 | 4 | 4 | 4 | 4 | 4 | | | |
| | Q242030000 | ARANDELA ABANICO A5 A.304 | FAN WASHER A5 A.304 | 4 | 4 | 4 | 4 | 4 | | | |
| | Q232030000 | ARANDELA A5 | WASHER A5 | 4 | 4 | 4 | 4 | 4 | | | |
| 4 | Z220901000 | BOMBA DESAGUE 30W | DRAINAGE PUMP 30W | 1 | 1 | _ | 1 | 1 | | | |
| 4 | Z223501000 | BOMBA DESAGUE 30W 60HZ | DRAINAGE PUMP 30W 60HZ | 1 | 1 | 1 | 1 | 1 | | | |
| 5 | Q881305000 | ABRAZADERA 25-40 | CLAMP 25-40 | 2 | 2 | 2 | 2 | 2 | | | |
| 6 | Z220902000 | ACUMULADOR 1503019 | ACCUMULATOR 1503019 | 1 | 1 | 1 | 1 | 1 | | | |
| 7 | Q901308000 | ABRAZAD. ELAST. 56-58.8 | ELAST. CLAMP 56-58.8 | 1 | 1 | 1 | 1 | 1 | | | |
| 8 | Z200908000 | ABRAZADERA CUBETA COMPL. | COMPL. TRAY CLAMP | 1 | 1 | 1 | 1 | 1 | | | |
| 9 | Z220903000 | MANGUERA DESAGUE | DRAINAGE HOSE | 1 | 1 | 1 | 1 | 1 | | | |
| 10 | Z200907000 | JUNTA CUBETA | TRAY SEAL | 1 | 1 | 1 | 1 | 1 | | | |
| 11 | Z200906000 | CUBETA | TRAY | 1 | 1 | 1 | 1 | 1 | | | |
| 12 | Z200922000 | CONJUNTO FILTRO AF. | AF FILTER UNIT. | 1 | 1 | 1 | 1 | 1 | | | |
| 13 | Q307051000 | JUNTA TOR.36.17X41.41X2.6 | O-RING 36.17X41.41X2.6 | 1 | 1 | 1 | 1 | 1 | | | |
| 14 | Z200909000 | ALIVIADERO | OVERFLOW | 1 | 1 | 1 | 1 | 1 | | | ELIMINADO 24.06.2013 |
| 14 | 12049258 | ALIVIADERO AF MODELO B | OVERFLOW AF MOD. B | 1 | 1 | 1 | 1 | 1 | | | INTRODUCIDO 24.06.2013 |
| | | | | | | | | | | | |
| | | | | | | | | | | | |
| | | | | | | | | | | | |
| | | | | | | | | | | | |
| | | | | | | | | | | | |
| | | | | | | | | | | | |
| | | | | | | | | | | | |

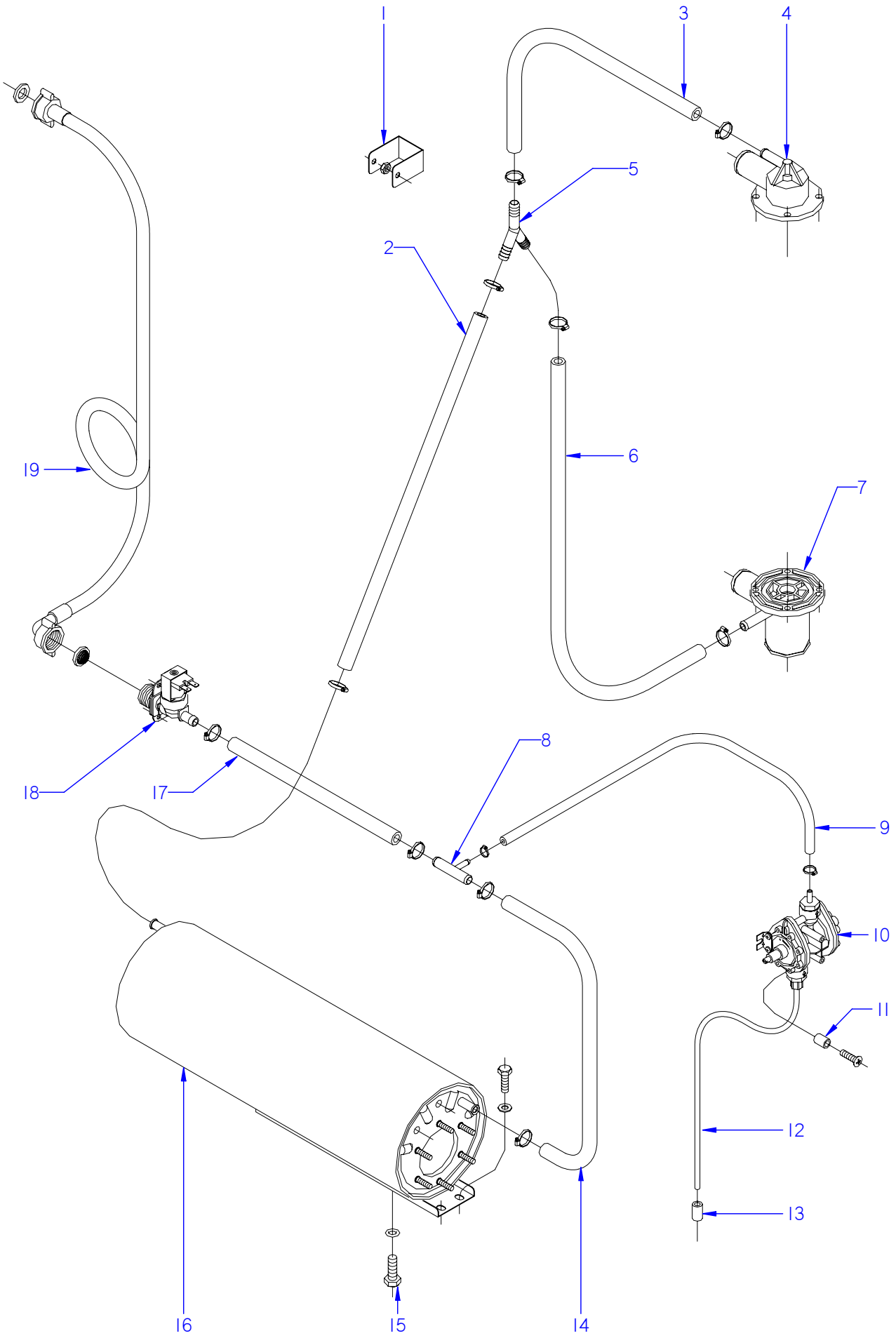


ITEM MARCADO EN COLOR = REPUESTO RECOMENDADO
COLOURED ITEM = RECOMMENDED SPARE PART

| N plano | Firma | Fecha | Aparato | PARTE FUNCIONAL ACLARADO | Lamina | |
|---|---|---|---|---|---|---|
| C-1848 | | 2007-06 | LAVAVAJILLAS FI-64 ; FI-64B | | 6 | Fagor Industrial S.Coop. FAGOR Oñate |

| MOD. | LAVAVAJILLAS DE APERTURA FRONTAL<br>FRONT LOADING DISHWASHER | ZONA / ZONE | PARTE FUNCIONAL ACLARADO<br>RINSE FUNCTIONAL PART | PLANO<br>DIAGRAM | C-1848 |
|---|---|---|---|---|---|

| ITEM | CODIGO<br>CODE | DENOMINACION | NAME | FI-64 | FI-64 B | | | | | | NOTAS |
|---|---|---|---|---|---|---|---|---|---|---|---|
| 1 | R722631000 | FIJACION ALERON | AILERON FASTENING | 1 | 1 | | | | | | ELIMINADO 01.01.09 |
| | Q162040000 | TUERCA EXAGONAL M6 | HEXAGONAL NUT M6 | 1 | 1 | | | | | | |
| 2 | 3676900000 | TUBO GOMA NEGRA Ø 17*10 | BLACK RUBBER PIPE 17*10 | 1 | 1 | | | | | | |
| | Q881302000 | ABRAZADERA 12-20 | CLAMP 12-20 | 2 | 2 | | | | | | |
| 3 | 3676900000 | TUBO GOMA NEGRA Ø 17*10 | BLACK RUBBER PIPE 17*10 | 1 | 1 | | | | | | |
| | Q881302000 | ABRAZADERA 12-20 | CLAMP 12-20 | 2 | 2 | | | | | | |
| 4 | Z200707000 | SOPORTE DISTRIB. SUPERIOR | UPPER DISTRIB. SUPPORT | 1 | 1 | | | | | | |
| 5 | Z201106000 | RACORD EN Y | Y-CONNECTION | 1 | 1 | | | | | | |
| 6 | 3676900000 | TUBO GOMA NEGRA Ø 17*10 | BLACK RUBBER PIPE 17*10 | 1 | 1 | | | | | | |
| | Q881302000 | ABRAZADERA 12-20 | CLAMP 12-20 | 2 | 2 | | | | | | |
| 7 | Z200703000 | PASAMUROS | BUSHING | 1 | 1 | | | | | | |
| 8 | Z601157000 | TOMA PRESION | PRESSURE INTAKE | 1 | 1 | | | | | | |
| 9 | 3704000000 | TUBO GOMA NEGRO D 10,5*5 | BLACK RUBBER PIPE Ø 10.5*5 | 1 | 1 | | | | | | |
| | Q881308000 | ABRAZADERA 8-14L | CLAMP 8-14L | 2 | 2 | | | | | | |
| 10 | Z651123000 | DOSIFICADOR TENSOACTIVO | SURFACE ACTIVE DISPENSER | 1 | 1 | | | | | | ELIMINADO 03.04.09 |
| 10 | Z211109000 | DOSIFICADOR TENSOACTIVO N-6 | SURFACE ACT. DISP. N-6 | 1 | 1 | | | | | | ELIMINADO 18.06.2012 |
| 10 | 12045206 | DOSIFICADOR_ABRILLANTADOR_A( | RINSE AID DISPENSER | 1 | 1 | | | | | | INTRODUCIDO 18.06.2012 |
| 11 | Z203007000 | CASQUILLO | BUSHING | 2 | 2 | | | | | | |
| 12 | Z448614000 | CONDUCTO ASPIRACIÓN | EXTRACTOR PIPE | 1 | 1 | | | | | | ELIMINADO 31.07.07 |
| 12 | Z448618000 | CONDUCTO ABRILLANTADOR | CROCKERY POLISHER PIPE | 1 | 1 | | | | | | INTRODUCIDO 31.07.07 |
| 13 | Z701152000 | PESO FILTRO | FILTER WEIGHT | 1 | 1 | | | | | | |
| 14 | 3676900000 | TUBO GOMA NEGRA Ø 17*10 | BLACK RUBBER PIPE 17*10 | 1 | 1 | | | | | | |
| | Q881302000 | ABRAZADERA 12-20 | CLAMP 12-20 | 2 | 2 | | | | | | |
| 15 | Q012063000 | TORNIL. EXAGONAL M10x20 A.304 | HEXAGONAL BOLT M10X20 A.304 | 1 | 1 | | | | | | |
| | Q307048000 | JUNTA TORICA Ø9.12X16.18X3.53 | O-RING Ø9.12X16.18X3.53 | 1 | 1 | | | | | | |
| 16 | 12022943 | CALDERIN COMPLETO | COMPLETE DRUM | 1 | 1 | | | | | | |
| 17 | 3676900000 | TUBO GOMA NEGRA Ø 17*10 | BLACK RUBBER PIPE 17*10 | 1 | 1 | | | | | | |
| | Q881302000 | ABRAZADERA 12-20 | CLAMP 12-20 | 2 | 2 | | | | | | |
| 18 | Z701135000 | ELECTR. SIMP.220V COD.255.208 | SOLENOID VALVE SIMP.220V CO | 1 | 1 | | | | | | |
| | Q152024000 | TORN. AVELLANADO M4x8 A.304 | HEXAGONAL COUNTERSUNK M4 | 2 | 2 | | | | | | |
| 19 | Z602121000 | MANGUERA ENTRADA AGUA | WATER INTAKE HOSE | 1 | 1 | | | | | | |

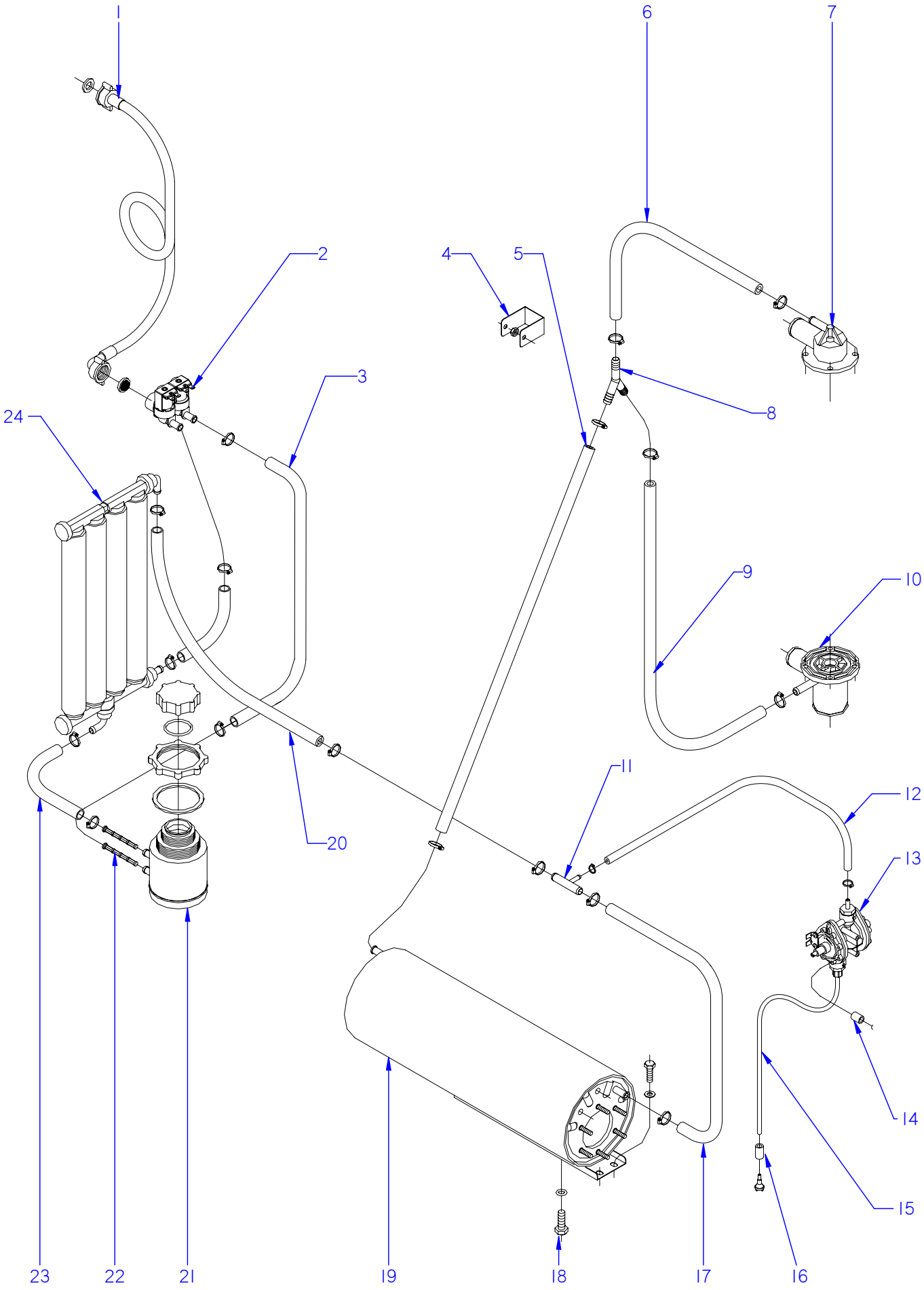


ITEM MARCADO EN COLOR = REPUESTO RECOMENDADO
COLOURED ITEM = RECOMMENDED SPARE PART

| N plano | Firma | Fecha | Aparato | Lamina | |
|---|---|---|---|---|---|
| C-1849 | | 2007-06 | PARTE FUNCIONAL ACLARADO<br>LAVAVAJILLAS FI-64 D | 7 | Fagor Industrial S.Coop.<br>Oñate |

| MOD. | LAVAVAJILLAS DE APERTURA FRONTAL<br>FRONT LOADING DISHWASHER | ZONA / ZONE | PARTE FUNCIONAL ACLARADO<br>RINSE FUNCTIONAL PART | PLANO<br>DIAGRAM | C-1849 |
|---|---|---|---|---|---|

| ITEM | CODIGO<br>CODE | DENOMINACION | NAME | FI-64 D | | | | | | | NOTAS |
|---|---|---|---|---|---|---|---|---|---|---|---|
| 1 | Z602121000 | MANGUERA ENTRADA AGUA | WATER INTAKE HOSE | 1 | | | | | | | |
| 2 | P255001000 | ELECTROVALVULA DOBLE | DOUBLE SOLENOID VALVE | 1 | | | | | | | |
| | P305013000 | REGULADOR 1L. AMA 255.005 | REGULATOR 1L. AMA 255.005 | 1 | | | | | | | |
| | Q152024000 | TORN. AVELLANADO M4x8 A.304 | HEXAGONAL COUNTERSUNK M4 | 2 | | | | | | | |
| 3 | 3676900000 | TUBO GOMA NEGRA Ø 17*10 | BLACK RUBBER PIPE 17*10 | 1 | | | | | | | |
| | Q881302000 | ABRAZADERA 12-20 | CLAMP 12-20 | 2 | | | | | | | |
| 4 | R722631000 | FIJACION ALERON | AILERON FASTENING | 1 | | | | | | | ELIMINADO 01.01.09 |
| | Q162040000 | TUERCA EXAGONAL M6 | HEXAGONAL NUT M6 | 1 | | | | | | | |
| 5 | 3676900000 | TUBO GOMA NEGRA Ø 17*10 | BLACK RUBBER PIPE 17*10 | 1 | | | | | | | |
| | Q881302000 | ABRAZADERA 12-20 | CLAMP 12-20 | 2 | | | | | | | |
| 6 | 3676900000 | TUBO GOMA NEGRA Ø 17*10 | BLACK RUBBER PIPE 17*10 | 1 | | | | | | | |
| | Q881302000 | ABRAZADERA 12-20 | CLAMP 12-20 | 2 | | | | | | | |
| 7 | Z200707000 | SOPORTE DISTRIB. SUPERIOR | UPPER DISTRIB. SUPPORT | 1 | | | | | | | |
| 8 | Z201106000 | RACORD EN Y | Y-CONNECTION | 1 | | | | | | | |
| 9 | 3676900000 | TUBO GOMA NEGRA Ø 17*10 | BLACK RUBBER PIPE 17*10 | 1 | | | | | | | |
| | Q881302000 | ABRAZADERA 12-20 | CLAMP 12-20 | 2 | | | | | | | |
| 10 | Z200703000 | PASAMUROS | BUSHING | 1 | | | | | | | |
| 11 | Z601157000 | TOMA PRESION | PRESSURE INTAKE | 1 | | | | | | | |
| 12 | 3704000000 | TUBO GOMA NEGRO D 10,5*5 | BLACK RUBBER PIPE Ø 10.5*5 | 1 | | | | | | | |
| | Q881308000 | ABRAZADERA 8-14L | CLAMP 8-14L | 2 | | | | | | | |
| 13 | Z651123000 | DOSIFICADOR TENSOACTIVO | SURFACE ACTIVE DISPENSER | 1 | | | | | | | ELIMINADO 03.04.09 |
| 13 | Z211109000 | DOSIFICADOR TENSOACTIVO N-6 | SURFACE ACT. DISP. N-6 | 1 | | | | | | | ELIMINADO 18.06.2012 |
| 13 | 12045206 | DOSIFICADOR_ABRILLANTADOR_A( | RINSE AID DISPENSER | 1 | | | | | | | INTRODUCIDO 18.06.2012 |
| 14 | Z203007000 | CASQUILLO | BUSHING | 2 | | | | | | | |
| 15 | Z448614000 | CONDUCTO ASPIRACIÓN | EXTRACTOR PIPE | 1 | | | | | | | ELIMINADO 31.07.07 |
| 15 | Z448618000 | CONDUCTO ABRILLANTADOR | CROCKERY POLISHER PIPE | 1 | | | | | | | INTRODUCIDO 31.07.07 |
| 16 | Z701152000 | PESO FILTRO | FILTER WEIGHT | 1 | | | | | | | |
| 17 | 3676900000 | TUBO GOMA NEGRA Ø 17*10 | BLACK RUBBER PIPE 17*10 | 1 | | | | | | | |
| | Q881302000 | ABRAZADERA 12-20 | CLAMP 12-20 | 2 | | | | | | | |
| 18 | Q012063000 | TORNIL. EXAGONAL M10x20 A.304 | HEXAGONAL BOLT M10X20 A.304 | 1 | | | | | | | |
| | Q307048000 | JUNTA TORICA Ø9.12X16.18X3.53 | O-RING Ø9.12X16.18X3.53 | 1 | | | | | | | |

| MOD. | LAVAVAJILLAS DE APERTURA FRONTAL<br>FRONT LOADING DISHWASHER | ZONA / ZONE | PARTE FUNCIONAL ACLARADO<br>RINSE FUNCTIONAL PART | PLANO<br>DIAGRAM | C-1849 |
|---|---|---|---|---|---|

| ITEM | CODIGO<br>CODE | DENOMINACION | NAME | FI-64 D | | | | | | | NOTAS |
|---|---|---|---|---|---|---|---|---|---|---|---|
| 19 | 12022943 | CALDERIN COMPLETO | COMPLETE DRUM | 1 | | | | | | | |
| | Q012031000 | TORNIL. EXAGONAL M5x10 A.304 | HEXAGONAL BOLT M5X10 A.304 | 2 | | | | | | | |
| | Q232030000 | ARANDELA A5 | WASHER A5 | 2 | | | | | | | |
| 20 | 3676900000 | TUBO GOMA NEGRA Ø 17*10 | BLACK RUBBER PIPE 17*10 | 1 | | | | | | | |
| | Q881302000 | ABRAZADERA 12-20 | CLAMP 12-20 | 2 | | | | | | | |
| 21 | Z471102000 | DEPOSITO SOLDADO | WELDED TANK | 1 | | | | | | | |
| | Z471107000 | JUNTA TUERCA (BITRON 15702.01) | NUT SEAL (BITRON 15702.01) | 1 | | | | | | | |
| | Z471106000 | TUERCA (BITRON 27414.00) | NUT (BITRON 27414.00) | 1 | | | | | | | |
| | Z471109000 | JUNTA TAPON (BITRON 06485.02) | PLUG SEAL (BITRON 06485.02) | 1 | | | | | | | |
| | Z471108000 | TAPON (BITRON 27415.00) | PLUG (BITRON 27415.00) | 1 | | | | | | | |
| 22 | Z471105000 | FILTRO (BITRON 06281.01) | FILTER (BITRON 06281.01) | 2 | | | | | | | |
| 23 | 3676900000 | TUBO GOMA NEGRA Ø 17*10 | BLACK RUBBER PIPE 17*10 | 2 | | | | | | | |
| | Q881302000 | ABRAZADERA 12-20 | CLAMP 12-20 | 4 | | | | | | | |
| 24 | Z471101000 | DESCALCIFICADOR 4 COLUMNAS | WATER SOFTENER 4 COLUMN | 1 | | | | | | | |
| | Q152012000 | PERNO SOLDADO M6X15 | WELDED BOLT M6X15 | 2 | | | | | | | |
| | Z471112000 | SOPORTE INFERIOR DESCALCIF. | LOWER SUPPORT DESCALER | 2 | | | | | | | |

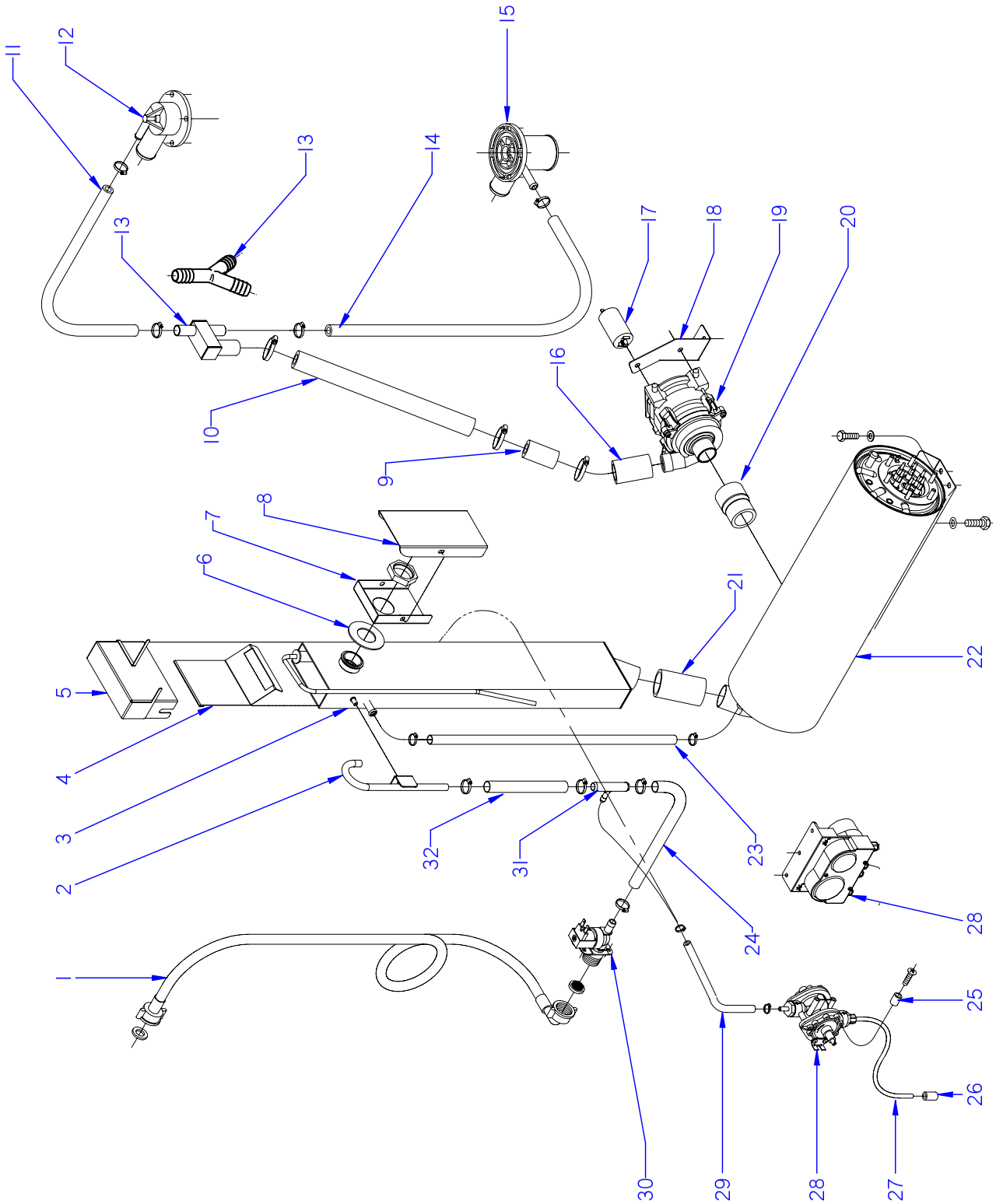


ITEM MARCADO EN COLOR = REPUESTO RECOMENDADO
COLOURED ITEM = RECOMMENDED SPARE PART

| N plano | Firma | Fecha | Aparato | Lamina | |
|---|---|---|---|---|---|
| C-1850 | | 2007-06 | PARTE FUNCIONAL DE ACLARADO<br>LAVAVAJ. FI-64 CLINIC; B-BTUK | 8 | Fagor Industrial S.Coop.<br>Oñate |

| MOD. | LAVAVAJILLAS DE APERTURA FRONTAL<br>FRONT LOADING DISHWASHER | ZONA / ZONE | PARTE FUNCIONAL ACLARADO<br>RINSE FUNCTIONAL PART | PLANO<br>DIAGRAM | C-1850 |
|---|---|---|---|---|---|

| ITEM | CODIGO<br>CODE | DENOMINACION | NAME | FI-64 HY<br>CLINIC | FI-64 B-BTUK | | | | | | NOTAS |
|---|---|---|---|---|---|---|---|---|---|---|---|
| 1 | Z602121000 | MANGUERA ENTRADA AGUA | WATER INTAKE HOSE | 1 | 1 | | | | | | |
| 2 | Z258903000 | CAÑO COMPLETO | COMPLETE SPOUT | 1 | 1 | | | | | | |
| | Q232040000 | ARANDELA A6 | WASHER A6 | 1 | 1 | | | | | | |
| | Q162040000 | TUERCA EXAGONAL M6 | HEXAGONAL NUT M6 | 1 | 1 | | | | | | |
| 3 | Z258906000 | DEPÓSITO COMPLETO | COMPLETE TANK | 1 | 1 | | | | | | |
| 4 | Z258953000 | TAPA INTERIOR DEPOSITO | TANK INNER COVER | 1 | 1 | | | | | | |
| 5 | Z258955000 | CUBIERTA DEPÓSITO | TANK COVER | 1 | 1 | | | | | | |
| | Q162040000 | TUERCA EXAGONAL M6 | HEXAGONAL NUT M6 | 1 | 1 | | | | | | |
| | Q232040000 | ARANDELA A6 | WASHER A6 | 1 | 1 | | | | | | |
| 6 | R675007000 | JUNTA RETENCION VAPORES | STEAM RETAINER SEAL | 1 | 1 | | | | | | |
| 7 | Z258938000 | CUBIERTA PASAMUROS INTER. | INTER. BUSHING COVER | 1 | 1 | | | | | | |
| | Q223014000 | CONTRATUERCA 1 LATON | COUNTERNUT 1 BRASS | 1 | 1 | | | | | | |
| 8 | Z258939000 | CUBIERTA PASAMUROS EXTER. | EXTER. BUSHING COVER | 1 | 1 | | | | | | |
| | Q222011000 | REMACHE EXAGONAL M5 INOX. | HEXAGONAL RIVET M5 INOX | 2 | 2 | | | | | | |
| | Q152004000 | TORNIL, APLASTADO M5x13 A304 | FLAT HEADED BOLT M5x13 A304 | 2 | 2 | | | | | | |
| 9 | Z257403000 | MANGUITO IMPULSIÓN | IMPULSE HOSE | 1 | 1 | | | | | | ELIMINADO 03.06.08 |
| 10 | 3722600000 | TUBO EPDM 28.5 X 22 REFORZ. | PIPE EPDM 28.5 X 22 REINF. | 1 | 1 | | | | | | ELIMINADO 01.12.08 |
| 10 | Z258967000 | MANGUERA ENJUAGUE BOMBA | RINSE PUMP HOSE | 1 | 1 | | | | | | INTRODUCIDO 03.04.09 |
| 11 | 3676900000 | TUBO GOMA NEGRA Ø 17*10 | BLACK RUBBER PIPE 17*10 | 1 | 1 | | | | | | |
| | Q881302000 | ABRAZADERA 12-20 | CLAMP 12-20 | 2 | 2 | | | | | | |
| 12 | Z200707000 | SOPORTE DISTRIB. SUPERIOR | UPPER DISTRIB. SUPPORT | 1 | 1 | | | | | | |
| 13 | Z258934000 | CONEXIÓN T COMPLETA | COMPLETE T CONNECTION | 1 | 1 | | | | | | ELIMINADO 01.04.09 |
| 13 | Z201106000 | RACORD EN Y | Y-CONNECTION | 1 | 1 | | | | | | INTRODUCIDO 15.04.09 |
| 14 | 3676900000 | TUBO GOMA NEGRA Ø 17*10 | BLACK RUBBER PIPE 17*10 | 1 | 1 | | | | | | |
| | Q881302000 | ABRAZADERA 12-20 | CLAMP 12-20 | 2 | 2 | | | | | | |
| 15 | Z200703000 | PASAMUROS | BUSHING | 1 | 1 | | | | | | |
| 16 | Z258933000 | MANGUITO IMPULSIÓN | IMPULSE HOSE | 1 | 1 | | | | | | ELIMINADO 01.12.08 |
| | Q881306000 | ABRAZADERA 32-50 L | CLAMP 32-50 L | 4 | 4 | | | | | | |
| 17 | Z258927000 | CONDENSADOR 3 µF | CONDENSER 3 µF | 1 | 1 | | | | | | ELIMINADO 01.04.09 |
| 17 | Z258969000 | CONDENSADOR 5 µF | CONDENSER 5 µF | 1 | 1 | | | | | | INTRODUCIDO 01.04.09 |
| | | | | | | | | | | | |

| MOD. | LAVAVAJILLAS DE APERTURA FRONTAL<br>FRONT LOADING DISHWASHER | ZONA / ZONE | PARTE FUNCIONAL ACLARADO<br>RINSE FUNCTIONAL PART | PLANO<br>DIAGRAM | C-1850 |
|---|---|---|---|---|---|

| ITEM | CODIGO<br>CODE | DENOMINACION | NAME | FI-64 HY<br>CLINIC | FI-64 B-BTUK | | | | | | NOTAS |
|---|---|---|---|---|---|---|---|---|---|---|---|
| 18 | Z258929000 | SOPORTE M. BOMBA ACLARADO | M-PUMP SUPPORT RINSE | 1 | 1 | | | | | | ELIMINADO 01.04.09 |
| 18 | Z258968000 | SOPORTE BOMBA HANNING | HANNING SUPPORT RINSE | 1 | 1 | | | | | | INTRODUCIDO 01.04.09 |
| | Q221342000 | REMACHE EXAGONAL M5 | HEXAGONAL RIVET M5 | 4 | 4 | | | | | | |
| | Q032035000 | TORNILLO ALOMADO M5x30 | CURVED SCREW M5X30 | 2 | 2 | | | | | | |
| 19 | Z258926000 | MOTOBOMBA | MOTORPUMP | 1 | 1 | | | | | | ELIMINADO 01.04.09 |
| 19 | Z258965000 | BOMBA ACLARADO HANNING | RINSE PUMP | 1 | 1 | | | | | | INTRODUCIDO 01.04.09 |
| 20 | Z258931000 | MANGUITO REDUCCIÓN | REDUCTION HOSE | 1 | 1 | | | | | | |
| 21 | Z258925000 | MANGUITO CONEXIÓN | CONNECTION HOSE | 1 | 1 | | | | | | |
| | Q881306000 | ABRAZADERA 32-50 L | CLAMP 32-50 L | 2 | 2 | | | | | | |
| 22 | Z258916000 | CALDERIN COMPLETO BBT | COMPLETE DRUM BBT | 1 | 1 | | | | | | |
| 23 | 3676900000 | TUBO GOMA NEGRA Ø 17*10 | BLACK RUBBER PIPE 17*10 | 1 | 1 | | | | | | |
| | Q881302000 | ABRAZADERA 12-20 | CLAMP 12-20 | 2 | 2 | | | | | | |
| 24 | 3676900000 | TUBO GOMA NEGRA Ø 17*10 | BLACK RUBBER PIPE 17*10 | 1 | 1 | | | | | | |
| | Q881302000 | ABRAZADERA 12-20 | CLAMP 12-20 | 2 | 2 | | | | | | |
| 25 | Z203007000 | CASQUILLO | BUSHING | 2 | 2 | | | | | | ELIMINADO 01.02.08 |
| | Q041324000 | TORN. AVELLA. M4x25 H.ZINCADO | COUNTERSUNK NUT M4x25 H.ZI | 2 | 2 | | | | | | ELIMINADO01.02.08 |
| 26 | Z701152000 | PESO FILTRO | FILTER WEIGHT | 1 | 1 | | | | | | ELIMINADO 01.02.08 |
| 27 | Z448614000 | CONDUCTO ASPIRACIÓN | EXTRACTOR PIPE | 1 | 1 | | | | | | ELIMINADO 31.07.07 |
| 27 | Z448618000 | CONDUCTO ABRILLANTADOR | POLISH DUCT | 1 | 1 | | | | | | INTRODUCIDO 06.09.10 |
| 28 | Z651123000 | DOSIFICADOR TENSOACTIVO | SURFACE ACTIVE DISPENSER | 1 | 1 | | | | | | ELIMINADO 01.02.08 |
| 28 | Z208915000 | DOSIFIC. DGTE ABRILLANTADOR | DETERGENT DISP. POLISHER | 1 | 1 | | | | | | INTRODUCIDO 01.02.08 |
| 29 | 3699200000 | CONDUCTO DOSIFICADOR 6X4 | CONDUIT 6X4 | 1 | 1 | | | | | | |
| | Q881308000 | ABRAZADERA 8-14L | CLAMP 8-14L | 2 | 2 | | | | | | |
| 30 | Z701135000 | ELECTR. SIMP.220V COD.255.208 | SOLENOID VALVE SIMP.220V CO | 1 | 1 | | | | | | |
| | Z601156000 | REGULADOR 8L RO. 254.034 | REGULATOR 8L RED 254.034 | 1 | 1 | | | | | | ELIMINADO 27.02.2012 |
| | Z841107000 | REGUL.ENTRADA 10L 254.067 | REGULATOR 10L 254.067 | 1 | 1 | | | | | | ELIMINADO 01.05.2012 |
| | 12044690 | REGULADOR DE CAUDAL | REGULATOR | 1 | 1 | | | | | | INTRODUCIDO 01.05.2012 |
| 31 | Z601157000 | TOMA PRESION | PRESSURE INTAKE | 1 | 1 | | | | | | ELIMINADO 01.04.08 |
| 31 | Z718949000 | TE TOMA PRESION | PRESSURE INTAKE TE | 1 | 1 | | | | | | ELIMINADO 06.09.10 |
| 32 | 3676900000 | TUBO GOMA NEGRA Ø 17*10 | BLACK RUBBER PIPE 17*10 | 1 | 1 | | | | | | ELIMINADO 06.09.10 |
| | Q881302000 | ABRAZADERA 12-20 | CLAMP 12-20 | 2 | 2 | | | | | | ELIMINADO 06.09.10 |

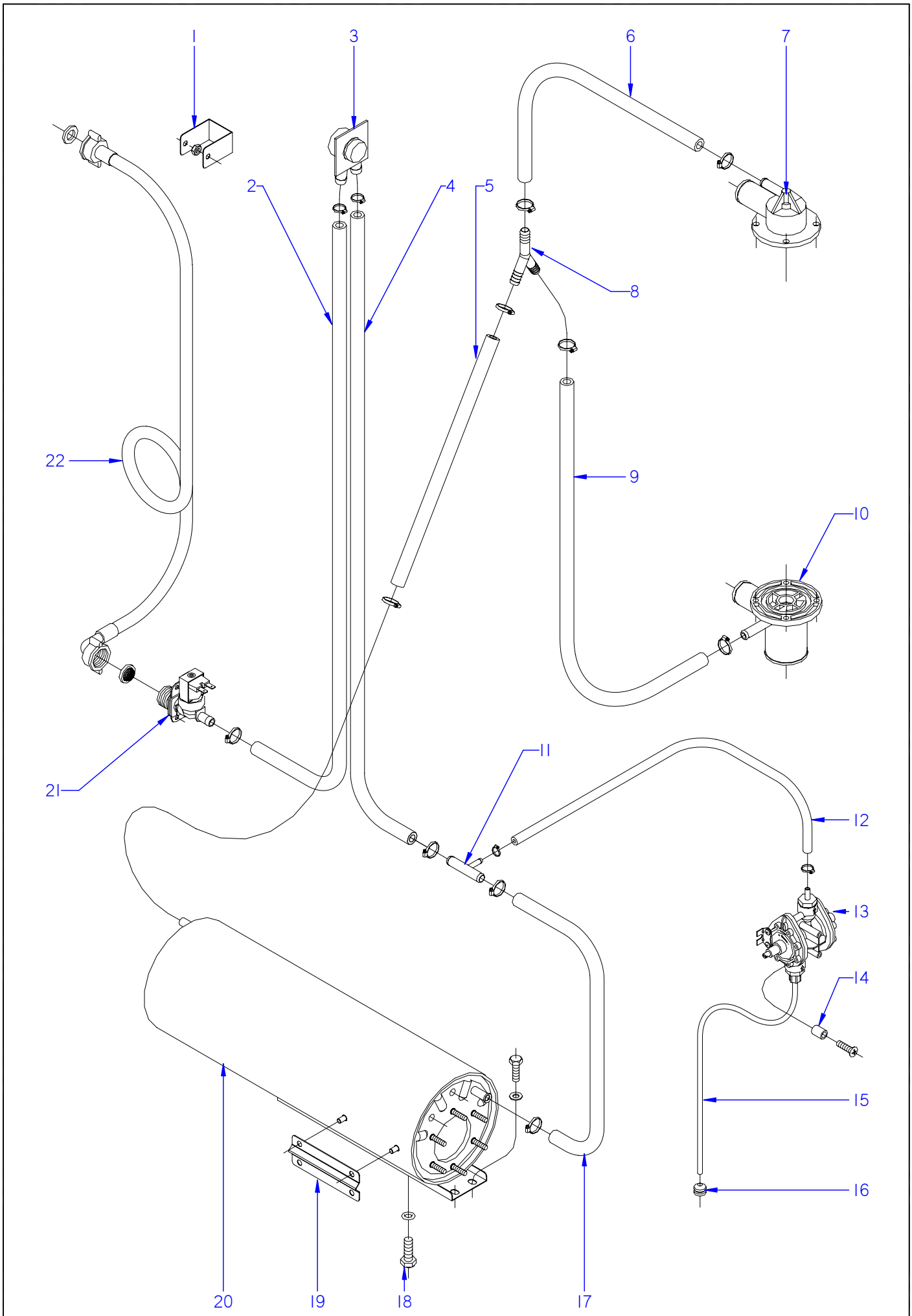


ITEM MARCADO EN COLOR = REPUESTO RECOMENDADO
COLOURED ITEM = RECOMMENDED SPARE PART

| N plano | Firma | Fecha | Aparato | PARTE FUNCIONAL ACLARADO | Lamina | |
|---|---|---|---|---|---|---|
| C-1851 | | 2007-06 | LAVAVAJILLAS FI-64 C; W; AR | | 9 | Fagor Industrial S.Coop. FAGOR Oñate |

| MOD. | LAVAVAJILLAS DE APERTURA FRONTAL<br>FRONT LOADING DISHWASHER | ZONA / ZONE | PARTE FUNCIONAL ACLARADO<br>RINSE FUNCTIONAL PART | PLANO<br>DIAGRAM | C-1851 |
|---|---|---|---|---|---|

| ITEM | CODIGO<br>CODE | DENOMINACION | NAME | FI-64 C | FI-64 W | FI-64 AR | | | | | NOTAS |
|---|---|---|---|---|---|---|---|---|---|---|---|
| 1 | R722631000 | FIJACION ALERON | AILERON FASTENING | 1 | 1 | 1 | | | | | ELIMINADO 01.01.09 |
| | Q162040000 | TUERCA EXAGONAL M6 | HEXAGONAL NUT M6 | 1 | 1 | 1 | | | | | |
| 2 | 3676900000 | TUBO GOMA NEGRA Ø 17*10 | BLACK RUBBER PIPE 17*10 | 1 | 1 | 1 | | | | | |
| | Q881302000 | ABRAZADERA 12-20 | CLAMP 12-20 | 2 | 2 | 2 | | | | | |
| 3 | Z231106000 | VALVULA ANTIRRETORNO | NON-RETURN VALVE | 1 | 1 | 1 | | | | | |
| 4 | 3676900000 | TUBO GOMA NEGRA Ø 17*10 | BLACK RUBBER PIPE 17*10 | 1 | 1 | 1 | | | | | |
| | Q881302000 | ABRAZADERA 12-20 | CLAMP 12-20 | 2 | 2 | 2 | | | | | |
| 5 | 3676900000 | TUBO GOMA NEGRA Ø 17*10 | BLACK RUBBER PIPE 17*10 | 1 | 1 | 1 | | | | | |
| | Q881302000 | ABRAZADERA 12-20 | CLAMP 12-20 | 2 | 2 | 2 | | | | | |
| 6 | 3676900000 | TUBO GOMA NEGRA Ø 17*10 | BLACK RUBBER PIPE 17*10 | 1 | 1 | 1 | | | | | |
| | Q881302000 | ABRAZADERA 12-20 | CLAMP 12-20 | 2 | 2 | 2 | | | | | |
| 7 | Z200707000 | SOPORTE DISTRIB. SUPERIOR | UPPER DISTRIB. SUPPORT | 1 | 1 | 1 | | | | | |
| 8 | Z201106000 | RACORD EN Y | Y-CONNECTION | 1 | 1 | 1 | | | | | |
| 9 | 3676900000 | TUBO GOMA NEGRA Ø 17*10 | BLACK RUBBER PIPE 17*10 | 1 | 1 | 1 | | | | | |
| | Q881302000 | ABRAZADERA 12-20 | CLAMP 12-20 | 2 | 2 | 2 | | | | | |
| 10 | Z200703000 | PASAMUROS | BUSHING | 1 | 1 | 1 | | | | | |
| 11 | Z601157000 | TOMA PRESION | PRESSURE INTAKE | 1 | 1 | 1 | | | | | |
| 12 | 3704000000 | TUBO GOMA NEGRO D 10,5*5 | BLACK RUBBER PIPE Ø 10.5*5 | 1 | 1 | 1 | | | | | |
| | Q881308000 | ABRAZADERA 8-14L | CLAMP 8-14L | 2 | 2 | 2 | | | | | |
| 13 | Z651123000 | DOSIFICADOR TENSOACTIVO | SURFACE ACTIVE DISPENSER | 1 | 1 | 1 | | | | | ELIMINADO 03.04.09 |
| 13 | Z211109000 | DOSIFICADOR TENSOACTIVO N-6 | SURFACE ACT. DISP. N-6 | 1 | 1 | 1 | | | | | ELIMINADO 18.06.2012 |
| 13 | 12045206 | DOSIFICADOR_ABRILLANTADOR_A( | RINSE AID DISPENSER | 1 | 1 | 1 | | | | | INTRODUCIDO 18.06.2012 |
| 14 | Z203007000 | CASQUILLO | BUSHING | 2 | 2 | 2 | | | | | |
| | Q041324000 | TORN. AVELLA. M4x25 H.ZINCADO | COUNTERSUNK NUT M4x25 H.ZI | 2 | 2 | 2 | | | | | |
| 15 | Z448614000 | CONDUCTO ASPIRACIÓN | EXTRACTOR PIPE | 1 | 1 | 1 | | | | | |
| 16 | Z701152000 | PESO FILTRO | FILTER WEIGHT | 1 | 1 | 1 | | | | | |
| 17 | 3676900000 | TUBO GOMA NEGRA Ø 17*10 | BLACK RUBBER PIPE 17*10 | 1 | 1 | 1 | | | | | |
| | Q881302000 | ABRAZADERA 12-20 | CLAMP 12-20 | 2 | 2 | 2 | | | | | |
| 18 | Q012063000 | TORNIL. EXAGONAL M10x20 A.304 | HEXAGONAL BOLT M10X20 A.304 | 1 | 1 | 1 | | | | | |
| | Q307048000 | JUNTA TORICA Ø9.12X16.18X3.53 | O-RING Ø9.12X16.18X3.53 | 1 | 1 | 1 | | | | | |
| | | | | | | | | | | | |

| MOD. | LAVAVAJILLAS DE APERTURA FRONTAL<br>FRONT LOADING DISHWASHER | ZONA / ZONE | PARTE FUNCIONAL ACLARADO<br>RINSE FUNCTIONAL PART | PLANO<br>DIAGRAM | C-1851 |
|---|---|---|---|---|---|

| ITEM | CODIGO<br>CODE | DENOMINACION | NAME | FI-64 C | FI-64 W | FI-64 AR | | | | | NOTAS |
|---|---|---|---|---|---|---|---|---|---|---|---|
| 19 | Z748008000 | SOPORTE BULBO TERMOSTATO | THERMOSTAT BULB SUPPORT | _ | 1 | _ | | | | | |
| | Q162040000 | TUERCA EXAGONAL M6 | HEXAGONAL NUT M6 | _ | 2 | _ | | | | | |
| | Q232040000 | ARANDELA A6 | WASHER A6 | _ | 2 | _ | | | | | |
| | Q262040000 | ARANDELA GROW. A6 A.304 | WASHER GROW. A6 A.304 | _ | 2 | _ | | | | | |
| 20 | 12022943 | CALDERIN COMPLETO | COMPLETE DRUM | 1 | 1 | 1 | | | | | |
| | Q012031000 | TORNIL. EXAGONAL M5x10 A.304 | HEXAGONAL BOLT M5X10 A.304 | 2 | 2 | 2 | | | | | |
| | Q232030000 | ARANDELA A5 | WASHER A5 | 2 | 2 | 2 | | | | | |
| | Q152018000 | PERNO M6x10 | BOLT M6x10 | 2 | 2 | 2 | | | | | |
| 21 | Z701135000 | ELECTR. SIMP.220V COD.255.208 | SOLENOID VALVE SIMP.220V CO | 1 | 1 | 1 | | | | | |
| | Q152024000 | TORN. AVELLANADO M4x8 A.304 | HEXAGONAL COUNTERSUNK M4 | 2 | 2 | 2 | | | | | |
| 22 | Z602121000 | MANGUERA ENTRADA AGUA | WATER INTAKE HOSE | 1 | 1 | 1 | | | | | |

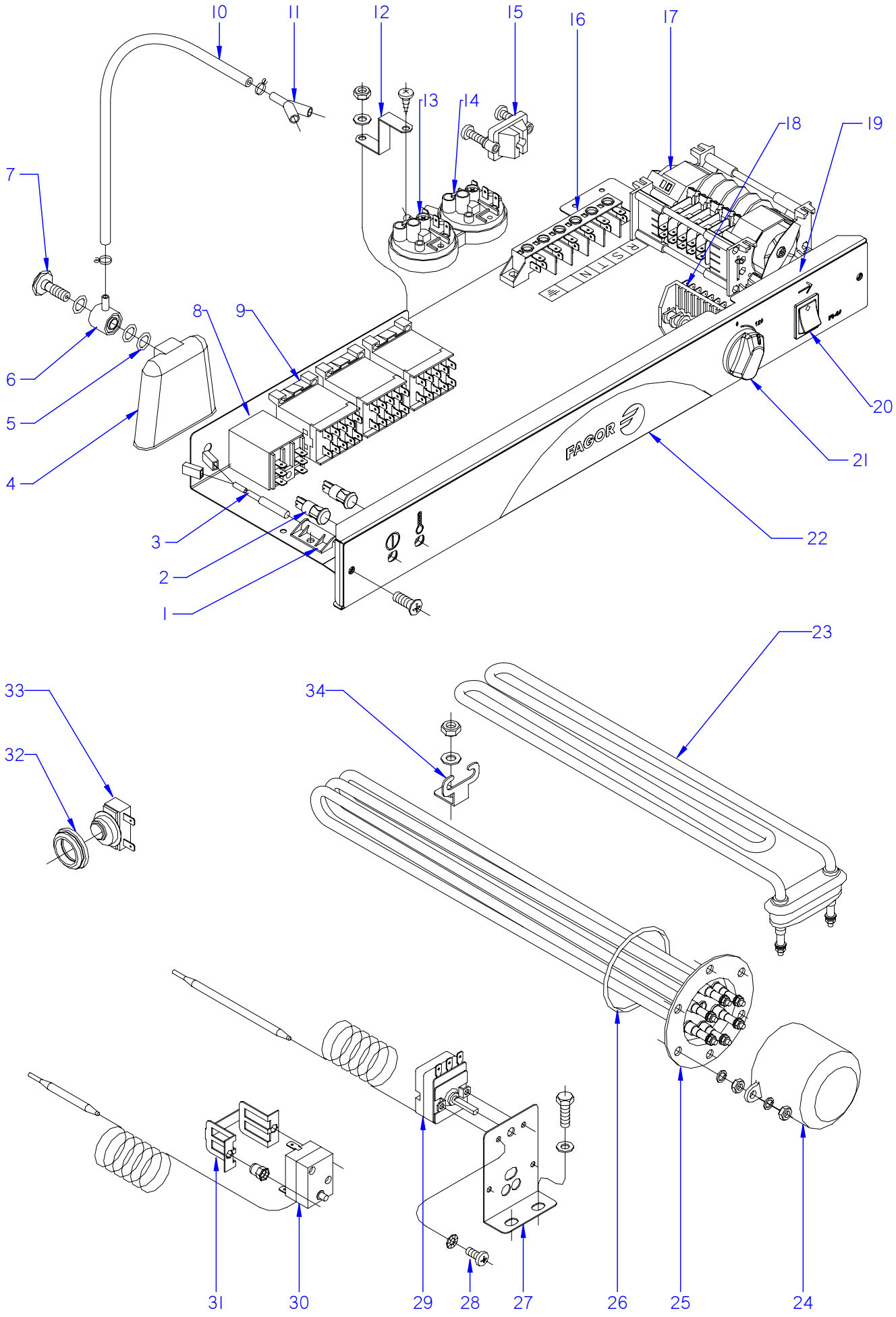


ITEM MARCADO EN COLOR = REPUESTO RECOMENDADO
COLOURED ITEM = RECOMMENDED SPARE PART

| N plano | Firma | Fecha | Aparato | PARTE FUNCIONAL ELECTRICA | Lamina | |
|---|---|---|---|---|---|---|
| C-1852 | | 2007-06 | LAVAVAJILLAS FI-64; FI-64 B | | 10 | Fagor Industrial S.Coop. FAGOR Onate |

| MOD. | LAVAVAJILLAS DE APERTURA FRONTAL<br>FRONT LOADING DISHWASHER | ZONA / ZONE | PARTE FUNCIONAL ELECTRICA<br>ELECTRICS FUNCTIONAL PART | PLANO<br>DIAGRAM | C-1852 |
|---|---|---|---|---|---|

| ITEM | CODIGO<br>CODE | DENOMINACION | NAME | FI-64 | FI-64 B | | | | | | NOTAS |
|---|---|---|---|---|---|---|---|---|---|---|---|
| 1 | Z203010000 | AMARRE INTERRUP. MAGNETICO | MAGNETIC SWITCH FASTENER | 1 | 1 | | | | | | |
| | Q152004000 | TORNIL, APLASTADO M5x13 A304 | FLAT HEADED BOLT M5x13 A304 | 1 | 1 | | | | | | |
| | Q232030000 | ARANDELA A5 | WASHER A5 | 1 | 1 | | | | | | |
| | Q162030000 | TUERCA EXAGONAL M5 | HEXAGONAL NUT M5 | 1 | 1 | | | | | | |
| 2 | R693056000 | PILOTO AMBAR 41227000A4 | AMBER PILOT 41227000A4 | 2 | 2 | | | | | | |
| 3 | Z203009000 | INTERRUPTOR MAGNETICO | MAGNETIC SWITCH | 1 | 1 | | | | | | |
| 4 | Z203011000 | CAMARA PRESOSTATO | PRESSURE SWITCH | 1 | 1 | | | | | | |
| 5 | Q307003000 | JUNTA TORICA 16.01X10.77X2.62 | O-RING 16.01X10.77X2.62 | 3 | 3 | | | | | | |
| 6 | Z203012000 | EMPALME PRESOSTATO | PRESSURE SWITCH CONNEX | 1 | 1 | | | | | | |
| 7 | Z203013000 | TORNILLO PRESOSTATO | PRESSURE SWITCH BOLT | 1 | 1 | | | | | | |
| 8 | Z203062000 | RELE 230V. 16A 50-60 HZ | RELAY 230V. 16A 50-60 HZ | 1 | 1 | | | | | | |
| | Q162050000 | TUERCA EXAGONAL M8x1 INOX. | HEXAGONAL NUT M8x1 INOX. | 1 | 1 | | | | | | |
| 9 | Z213007000 | CONTACTOR 230 V. 50-60 HZ | CONTACTOR 230 V. 50-60 HZ | 2 | 2 | | | | | | |
| 9 | Z213007000 | CONTACTOR 230 V. 50-60 HZ | CONTACTOR 230 V. 50-60 HZ | 1 | 1 | | | | | | ELIMINADO 01.11.08 |
| 9 | Z203050000 | CONTACTOR SIRIUS 3R 230V50-60 | CONTACTOR SIRIUS 3R 230V50- | 1 | 1 | | | | | | INTRODUCIDO 01.11.08 |
| 10 | 3702400000 | TUBO GOMA NEGRO Ø 8*4 | BLACK RUBBER PIPE Ø 8*4 | 1 | 1 | | | | | | |
| | P102154000 | BRIDA ELASTICA TUBO | ELASTIC PIPE FLANGE | 2 | 2 | | | | | | |
| 11 | Z103077000 | RACORD EN Y | Y-CONNECTION | _ | 1 | | | | | | |
| 12 | Z602923000 | SOPORTE PRESOSTATO | PRESSURE SWITCH SUPPORT | 1 | 1 | | | | | | |
| | Q082032000 | TORNILLO ALOMADO BZ-3,5X9,5 | CURVED SCREW BZ-3.5x9.5 | 1 | 1 | | | | | | |
| | Q152004000 | TORNILLO APLASTADO M5x13 | FLAT HEAD SCREW M5X13 | 1 | 1 | | | | | | |
| | Q232030000 | ARANDELA A5 | WASHER A5 | 1 | 1 | | | | | | |
| | Q162030000 | TUERCA EXAGONAL M5 | HEXAGONAL NUT M5 | 1 | 1 | | | | | | |
| 13 | Z203023000 | PRESOSTATO SIMPLE PVS | SIMPLE PVS PRESSURE SWITCH | 1 | 1 | | | | | | |
| 14 | Z223005000 | PRESOSTATO SIMPLE P.V.S. | SIMPLE P.V.S. PRESSURE SWITC | _ | 1 | | | | | | |
| 15 | Z203020000 | RETENEDOR DE CABLE | CABLE HOLDER | 1 | 1 | | | | | | |
| 16 | R253044000 | REGLETA AUXILIAR FV-122 | AUXILIARY TERMINAL STRIP FV- | 1 | 1 | | | | | | |
| | Z213005000 | ROTULO ADHESIVO | ADHESIVE LABEL | 1 | 1 | | | | | | |
| | Q152004000 | TORNILLO APLASTADO M5x13 | FLAT HEAD SCREW M5X13 | 2 | 2 | | | | | | |
| | Q232030000 | ARANDELA A5 | WASHER A5 | 2 | 2 | | | | | | |
| | Q162030000 | TUERCA EXAGONAL M5 | HEXAGONAL NUT M5 | 2 | 2 | | | | | | |

| MOD. | LAVAVAJILLAS DE APERTURA FRONTAL<br>FRONT LOADING DISHWASHER | ZONA / ZONE | PARTE FUNCIONAL ELECTRICA<br>ELECTRICS FUNCTIONAL PART | PLANO<br>DIAGRAM | C-1852 |
|---|---|---|---|---|---|

| ITEM | CODIGO<br>CODE | DENOMINACION | NAME | FI-64 | FI-64 B | | | | | | NOTAS |
|---|---|---|---|---|---|---|---|---|---|---|---|
| 17 | Z243004000 | PROGRAMADOR CICLO | CYCLE PROGRAMMER | 1 | 1 | | | | | | |
| | Q032021000 | TORNILLO ALOMADO M4x10 | CURVED SCREW M4X10 | 2 | 2 | | | | | | |
| | Q162020000 | TUERCA EXAGONAL M4 | HEXAGONAL NUT M4 | 2 | 2 | | | | | | |
| | Z203007000 | CASQUILLO | BUSHING | 2 | 2 | | | | | | |
| | Q041324000 | TORN. AVELLA. M4x25 H.ZINCADO | COUNTERSUNK NUT M4x25 H.ZI | 2 | 2 | | | | | | |
| 18 | Z213003000 | CONMUTADOR DE FUNCIONES | FUNCTIONS SWITCH | 1 | _ | | | | | | |
| 18 | Z223001000 | CONMUTADOR DE FUNCIONES | FUNCTIONS SWITCH | _ | 1 | | | | | | |
| 19 | Z202918000 | FRENTE COMPLETO | COMPLETE FRONT | 1 | 1 | | | | | | |
| | Q152004000 | TORNILLO APLASTADO M5x13 | FLAT HEAD SCREW M5X13 | 2 | 2 | | | | | | |
| | 3713500000 | PERFIL CUBREARISTAS PLASTICO | PLASTIC EDGE COVER PROFILE | 1 | 1 | | | | | | |
| 20 | Z203080000 | PULSADOR MARCHA NEGRO | BLACK RUN BUTTON | 1 | 1 | | | | | | |
| 21 | Z203069000 | BOTON DE MANDO | CONTROL BUTTON | 1 | 1 | | | | | | |
| 22 | Z242902000 | EMBELLECEDOR ADHESIVO FI-64 | ADHESIVE TRIM FI-64 | 1 | _ | | | | | | |
| 22 | Z252902000 | EMBELLECEDOR ADHES. FI-64 B | ADHES. TRIM FI-64 B | _ | 1 | | | | | | |
| | Q152024000 | TORNIL. AVELLANADO M4X8 A304 | COUNTERSUNK BOLT M4X8 A30 | 2 | 2 | | | | | | |
| 23 | Z203601000 | RESISTENCIA TANQUE | TANK RESISTOR | 1 | 1 | | | | | | |
| 24 | Z651731000 | CAPERUZA RESISTEN. CALDERIN | DRUM RESIST. CAP | 1 | 1 | | | | | | ELIMINADO 10.04.09 |
| 24 | Z101723000 | CAPERUZA RESISTEN. CALDERIN | DRUM RESIST. CAP | 1 | 1 | | | | | | INTRODUCIDO 10.04.09 |
| | Q163140000 | TUERCA EXAGONAL M6 LATON | HEXAGONAL NUT M6 BRASS | 2 | 2 | | | | | | |
| | Q012031000 | TORNIL. EXAGONAL M5x10 A.304 | HEXAGONAL BOLT M5X10 A.304 | 2 | 2 | | | | | | |
| | Q232030000 | ARANDELA A5 | WASHER A5 | 2 | 2 | | | | | | |
| 25 | Z241701000 | RESISTENCIA CALDERIN | DRUM RESISTOR | 1 | 1 | | | | | | |
| | Q221305000 | TUERCA EX.AUTO M4 ZINCADA | EX.AUTO NUT M4 ZINC-COATED | 6 | 6 | | | | | | |
| | Q163140000 | TUERCA EXAGONAL M6 LATON | HEXAGONAL NUT M6 BRASS | 6 | 6 | | | | | | |
| | Q262040000 | ARANDELA GROW. A6 A.304 | WASHER GROW. A6 A.304 | 6 | 6 | | | | | | |
| 26 | Q307035000 | JUNTA TORICA AN-36 282333 | O-RING AN-36 282333 | 1 | 1 | | | | | | |
| 27 | Z203047000 | SOPORTE TERMOSTATOS | THERMOSTAT SUPPORT | 1 | 1 | | | | | | |
| | Q012031000 | TORNIL. EXAGONAL M5X10 A.304 | HEXAGONAL BOLT M5X10 A.304 | 2 | 2 | | | | | | |
| | Q232030000 | ARANDELA A5 | WASHER A5 | 2 | 2 | | | | | | |
| | | | | | | | | | | | |
| | | | | | | | | | | | |

| MOD. | LAVAVAJILLAS DE APERTURA FRONTAL<br>FRONT LOADING DISHWASHER | ZONA / ZONE | PARTE FUNCIONAL ELECTRICA<br>ELECTRICS FUNCTIONAL PART | PLANO<br>DIAGRAM | C-1852 |
|---|---|---|---|---|---|

| ITEM | CODIGO<br>CODE | DENOMINACION | NAME | FI-64 | FI-64 B | | | | | | NOTAS |
|---|---|---|---|---|---|---|---|---|---|---|---|
| 28 | Q152024000 | TORNIL. AVELLANADO M4X8 A304 | COUNTERSUNK BOLT M4X8 A304 | 2 | 2 | | | | | | |
| 29 | Z203014000 | TERMOSTATO CALDERIN | WASH DRUM THERMOSTAT | 1 | 1 | | | | | | ELIMINADO 01.11.2012 |
| 29 | 12040858 | TERMOSTATO CALDERIN | WASH DRUM THERMOSTAT | 1 | 1 | | | | | | INTRODUCIDO 01.11.2012 |
| 30 | Z213014000 | LIMITADOR TECASA P. | LIMITER TECASA P. | 1 | 1 | | | | | | |
| 31 | Z203060000 | AMARRE LIMITADOR TECASA | LIMITER FASTENING TECASA | 1 | 1 | | | | | | |
| | Q221341000 | REMACHE EXAGONAL M4 | HEXAGONAL RIVET M4 | 2 | 2 | | | | | | |
| | Q152024000 | TORNIL. AVELLANADO M4X8 A304 | COUNTERSUNK BOLT M4X8 A304 | 2 | 2 | | | | | | |
| 32 | N503017000 | SOPORTE TERMOSTATO 1001713 | THERMOSTAT SUPPORT 1001713 | 1 | 1 | | | | | | |
| 33 | Z718405000 | TERMOSTATO DOBLE | DOUBLE THERMOSTAT | 1 | 1 | | | | | | |
| 34 | Z603602000 | SOPORTE RESISTENCIA TANQUE | TANK RESISTOR SUPPORT | 1 | 1 | | | | | | |
| | Q232040000 | ARANDELA A6 | WASHER A6 | 1 | 1 | | | | | | |
| | Q162040000 | TUERCA EXAGONAL M6 | HEXAGONAL NUT M6 | 1 | 1 | | | | | | |

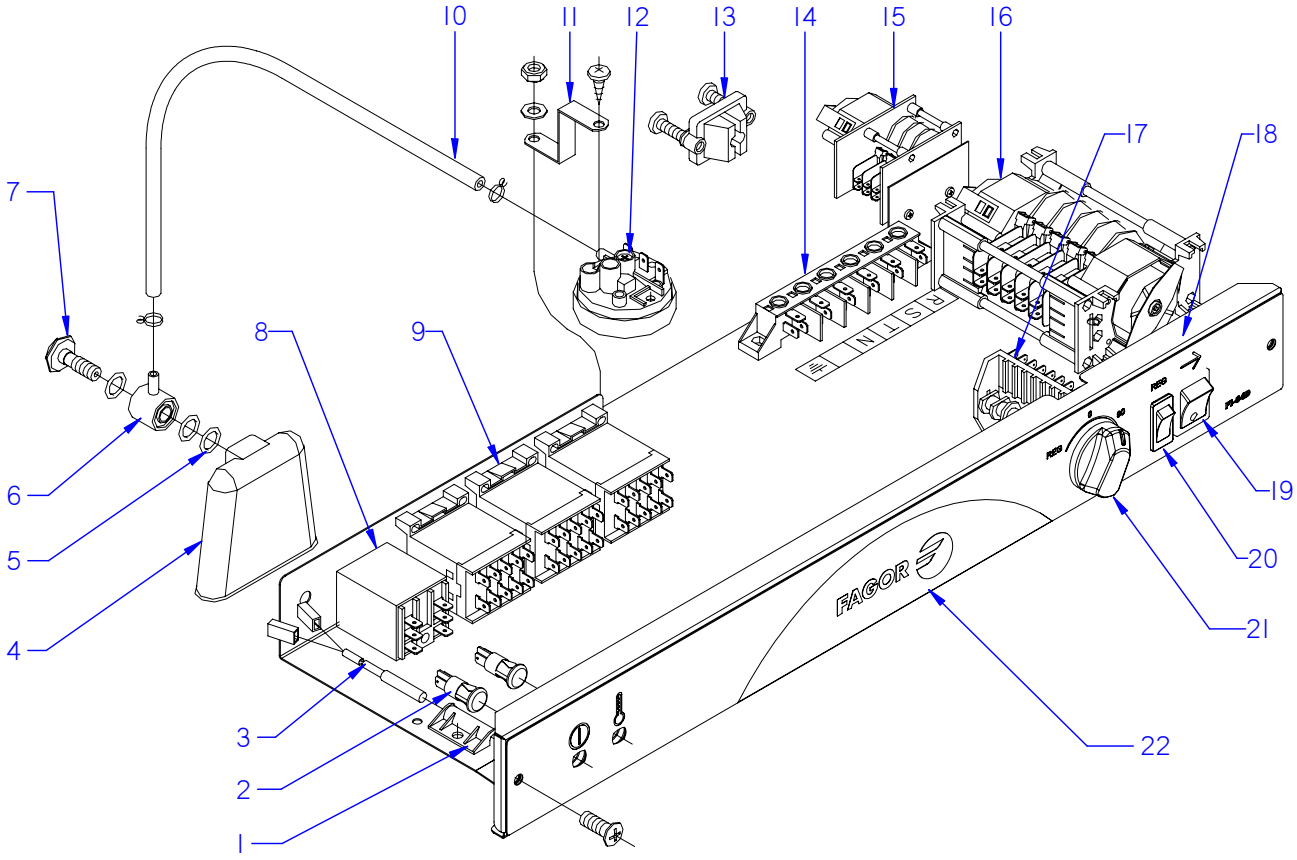


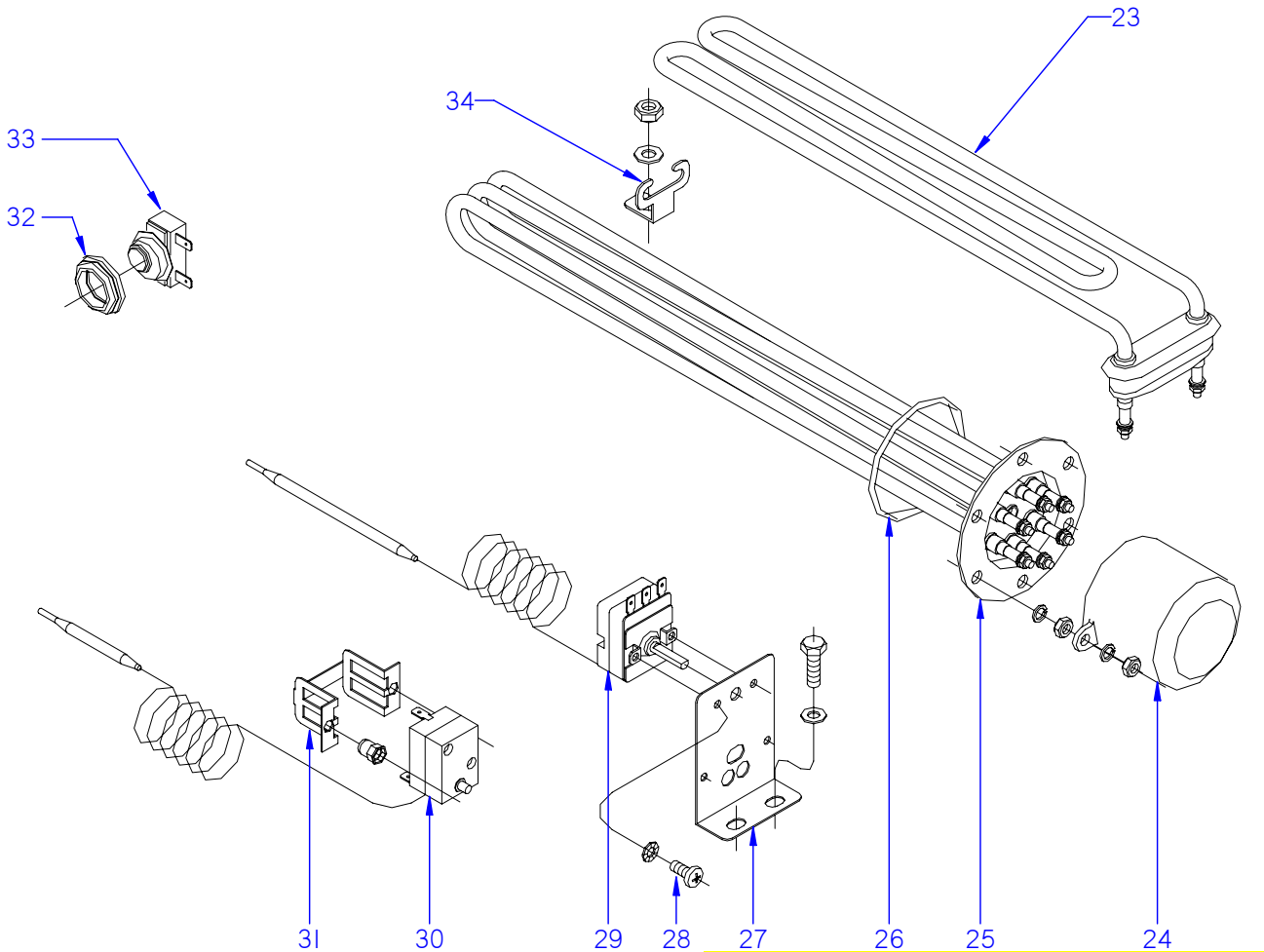


ITEM MARCADO EN COLOR = REPUESTO RECOMENDADO
COLOURED ITEM = RECOMMENDED SPARE PART

| N plano | Firma | Fecha | Aparato | | Lamina | |
|---|---|---|---|---|---|---|
| C-1853 | | 2007-06 | PARTE FUNCIONAL ELECTRICA<br>LAVAVAJILLAS FI-64 D | | 11 | Fagor Industrial S.Coop.<br>Oñate |

| MOD. | LAVAVAJILLAS DE APERTURA FRONTAL<br>FRONT LOADING DISHWASHER | ZONA / ZONE | PARTE FUNCIONAL ELECTRICA<br>ELECTRICS FUNCTIONAL PART | PLANO<br>DIAGRAM | C-1853 |
|---|---|---|---|---|---|

| ITEM | CODIGO<br>CODE | DENOMINACION | NAME | FI-64 D | | | | | | | NOTAS |
|---|---|---|---|---|---|---|---|---|---|---|---|
| 1 | Z203010000 | AMARRE INTERRUP. MAGNETICO | MAGNETIC SWITCH FASTENER | 1 | | | | | | | |
| | Q152004000 | TORNIL, APLASTADO M5x13 A304 | FLAT HEADED BOLT M5x13 A304 | 1 | | | | | | | |
| | Q232030000 | ARANDELA A5 | WASHER A5 | 1 | | | | | | | |
| | Q162030000 | TUERCA EXAGONAL M5 | HEXAGONAL NUT M5 | 1 | | | | | | | |
| 2 | R693056000 | PILOTO AMBAR 41227000A4 | AMBER PILOT 41227000A4 | 2 | | | | | | | |
| 3 | Z203009000 | INTERRUPTOR MAGNETICO | MAGNETIC SWITCH | 1 | | | | | | | |
| 4 | Z203011000 | CAMARA PRESOSTATO | PRESSURE SWITCH | 1 | | | | | | | |
| 5 | Q307003000 | JUNTA TORICA 16.01X10.77X2.62 | O-RING 16.01X10.77X2.62 | 3 | | | | | | | |
| 6 | Z203012000 | EMPALME PRESOSTATO | PRESSURE SWITCH CONNEX | 1 | | | | | | | |
| 7 | Z203013000 | TORNILLO PRESOSTATO | PRESSURE SWITCH BOLT | 1 | | | | | | | |
| 8 | Z203062000 | RELE 230V. 16A 50-60 HZ | RELAY 230V. 16A 50-60 HZ | 1 | | | | | | | |
| | Q162050000 | TUERCA EXAGONAL M8x1 INOX. | HEXAGONAL NUT M8x1 INOX. | 1 | | | | | | | |
| | Q261050000 | ARANDELA MUELLE A8 | SPRING WASHER A8 | 1 | | | | | | | |
| 9 | Z213007000 | CONTACTOR 230 V. 50-60 HZ | CONTACTOR 230 V. 50-60 HZ | 2 | | | | | | | |
| 9 | Z213007000 | CONTACTOR 230 V. 50-60 HZ | CONTACTOR 230 V. 50-60 HZ | 1 | | | | | | | ELIMINADO 01.11.08 |
| 9 | Z203050000 | CONTACTOR SIRIUS 3R 230V50-60 | CONTACTOR SIRIUS 3R 230V50- | 1 | | | | | | | INTRODUCIDO 01.11.08 |
| 9 | Z213007000 | CONTACTOR 230 V. 50-60 HZ | CONTACTOR 230 V. 50-60 HZ | 3 | | | | | | | |
| 10 | 3702400000 | TUBO GOMA NEGRO Ø 8*4 | BLACK RUBBER PIPE Ø 8*4 | 1 | | | | | | | |
| | P102154000 | BRIDA ELASTICA TUBO | ELASTIC PIPE FLANGE | 2 | | | | | | | |
| 11 | Z602923000 | SOPORTE PRESOSTATO | PRESSURE SWITCH SUPPORT | 1 | | | | | | | |
| | Q082032000 | TORNILLO ALOMADO BZ-3,5X9,5 | CURVED SCREW BZ-3.5x9.5 | 1 | | | | | | | |
| | Q152004000 | TORNILLO APLASTADO M5x13 | FLAT HEAD SCREW M5X13 | 1 | | | | | | | |
| | Q232030000 | ARANDELA A5 | WASHER A5 | 1 | | | | | | | |
| | Q162030000 | TUERCA EXAGONAL M5 | HEXAGONAL NUT M5 | 1 | | | | | | | |
| 12 | Z203023000 | PRESOSTATO SIMPLE PVS | SIMPLE PVS PRESSURE SWITCH | 1 | | | | | | | |
| 13 | Z203020000 | RETENEDOR DE CABLE | CABLE HOLDER | 1 | | | | | | | |
| 14 | R253044000 | REGLETA AUXILIAR FV-122 | AUXILIARY TERMINAL STRIP FV- | 1 | | | | | | | |
| | Z213005000 | ROTULO ADHESIVO | ADHESIVE LABEL | 1 | | | | | | | |
| 15 | Z613003000 | PROGRAMADOR REGENERACION | REGENERATION PROGRAMMER | 1 | | | | | | | |
| | Q032021000 | TORNILLO ALOMADO M4x10 | CURVED SCREW M4X10 | 2 | | | | | | | |
| | | | | | | | | | | | |

| MOD. | LAVAVAJILLAS DE APERTURA FRONTAL<br>FRONT LOADING DISHWASHER | ZONA / ZONE | PARTE FUNCIONAL ELECTRICA<br>ELECTRICS FUNCTIONAL PART | PLANO<br>DIAGRAM | C-1853 |
|---|---|---|---|---|---|

| ITEM | CODIGO<br>CODE | DENOMINACION | NAME | FI-64 D | | | | | | | NOTAS |
|---|---|---|---|---|---|---|---|---|---|---|---|
| 16 | Z243004000 | PROGRAMADOR CICLO 50 HZ | CYCLE PROGRAMMER 50 HZ | 1 | | | | | | | |
| 16 | Z243054000 | PROGRAMADOR CICLO 60 HZ | CYCLE PROGRAMMER 60 HZ | 1 | | | | | | | INTRODUCIDO 01.08.09 |
| | Q032021000 | TORNILLO ALOMADO M4x10 | CURVED SCREW M4X10 | 2 | | | | | | | |
| | Q162020000 | TUERCA EXAGONAL M4 | HEXAGONAL NUT M4 | 2 | | | | | | | |
| | Z203007000 | CASQUILLO | BUSHING | 2 | | | | | | | |
| | Q041324000 | TORN. AVELLA. M4x25 H.ZINCADO | COUNTERSUNK NUT M4x25 H.ZI | 2 | | | | | | | |
| 17 | Z223001000 | CONMUTADOR DE FUNCIONES | FUNCTIONS SWITCH | 1 | | | | | | | |
| 18 | Z202918000 | FRENTE COMPLETO | COMPLETE FRONT | 1 | | | | | | | |
| | Q152004000 | TORNILLO APLASTADO M5x13 | FLAT HEAD SCREW M5X13 | 2 | | | | | | | |
| | 3713500000 | PERFIL CUBREARISTAS PLASTICO | PLASTIC EDGE COVER PROFILE | 1 | | | | | | | |
| 19 | Z203080000 | PULSADOR MARCHA NEGRO | BLACK RUN BUTTON | 1 | | | | | | | |
| 20 | Z203070000 | PULSADOR NEGRO | BLACK BUTTON | 1 | | | | | | | |
| | Q162020000 | TUERCA EXAGONAL M4 | HEXAGONAL NUT M4 | 2 | | | | | | | |
| 21 | Z203069000 | BOTON DE MANDO | CONTROL BUTTON | 1 | | | | | | | |
| 22 | Z247805000 | EMBELLECEDOR ADHES. FI-64 D | ADHES. TRIM FI-64 D | 1 | | | | | | | |
| | Q152024000 | TORNIL. AVELLANADO M4X8 A304 | COUNTERSUNK BOLT M4X8 A30 | 2 | | | | | | | |
| 23 | Z203601000 | RESISTENCIA TANQUE | TANK RESISTOR | 1 | | | | | | | |
| 24 | Z651731000 | CAPERUZA RESISTEN. CALDERIN | DRUM RESIST. CAP | 1 | | | | | | | ELIMINADO 10.04.09 |
| 24 | Z101723000 | CAPERUZA RESISTEN. CALDERIN | DRUM RESIST. CAP | 1 | | | | | | | INTRODUCIDO 10.04.09 |
| | Q163140000 | TUERCA EXAGONAL M6 LATON | HEXAGONAL NUT M6 BRASS | 2 | | | | | | | |
| | Q012031000 | TORNIL. EXAGONAL M5x10 A.304 | HEXAGONAL BOLT M5X10 A.304 | 2 | | | | | | | |
| | Q232030000 | ARANDELA A5 | WASHER A5 | 2 | | | | | | | |
| 25 | Z241701000 | RESISTENCIA CALDERIN | DRUM RESISTOR | 1 | | | | | | | |
| | Q221305000 | TUERCA EX.AUTO M4 ZINCADA | EX.AUTO NUT M4 ZINC-COATED | 6 | | | | | | | |
| | Q163140000 | TUERCA EXAGONAL M6 LATON | HEXAGONAL NUT M6 BRASS | 6 | | | | | | | |
| | Q262040000 | ARANDELA GROW. A6 A.304 | WASHER GROW. A6 A.304 | 6 | | | | | | | |
| 26 | Q307035000 | JUNTA TORICA AN-36 282333 | O-RING AN-36 282333 | 1 | | | | | | | |
| 27 | Z203047000 | SOPORTE TERMOSTATOS | THERMOSTAT SUPPORT | 1 | | | | | | | |
| | Q012031000 | TORNIL. EXAGONAL M5X10 A.304 | HEXAGONAL BOLT M5X10 A.304 | 2 | | | | | | | |
| | Q232030000 | ARANDELA A5 | WASHER A5 | 2 | | | | | | | |
| | | | | | | | | | | | |

| MOD. | LAVAVAJILLAS DE APERTURA FRONTAL<br>FRONT LOADING DISHWASHER | ZONA / ZONE | PARTE FUNCIONAL ELECTRICA<br>ELECTRICS FUNCTIONAL PART | PLANO<br>DIAGRAM | C-1853 |
|---|---|---|---|---|---|

| ITEM | CODIGO<br>CODE | DENOMINACION | NAME | FI-64 D | | | | | | | NOTAS |
|---|---|---|---|---|---|---|---|---|---|---|---|
| 28 | Q152024000 | TORNIL. AVELLANADO M4X8 A304 | COUNTERSUNK BOLT M4X8 A304 | 2 | | | | | | | |
| 29 | Z203014000 | TERMOSTATO CALDERIN | WASH DRUM THERMOSTAT | 1 | | | | | | | ELIMINADO 01.11.2012 |
| 29 | 12040858 | TERMOSTATO CALDERIN | WASH DRUM THERMOSTAT | 1 | | | | | | | INTRODUCIDO 01.11.2012 |
| 30 | Z213014000 | LIMITADOR TECASA P. | LIMITER TECASA P. | 1 | | | | | | | |
| 31 | Z203060000 | AMARRE LIMITADOR TECASA | LIMITER FASTENING TECASA | 1 | | | | | | | |
| | Q221341000 | REMACHE EXAGONAL M4 | HEXAGONAL RIVET M4 | 2 | | | | | | | |
| | Q152024000 | TORNIL. AVELLANADO M4X8 A304 | COUNTERSUNK BOLT M4X8 A304 | 2 | | | | | | | |
| 32 | N503017000 | SOPORTE TERMOSTATO 1001713 | THERMOSTAT SUPPORT 1001713 | 1 | | | | | | | |
| 33 | Z718405000 | TERMOSTATO DOBLE | DOUBLE THERMOSTAT | 1 | | | | | | | |
| 34 | Z603602000 | SOPORTE RESISTENCIA TANQUE | TANK RESISTOR SUPPORT | 1 | | | | | | | |
| | Q232040000 | ARANDELA A6 | WASHER A6 | 1 | | | | | | | |
| | Q162040000 | TUERCA EXAGONAL M6 | HEXAGONAL NUT M6 | 1 | | | | | | | |

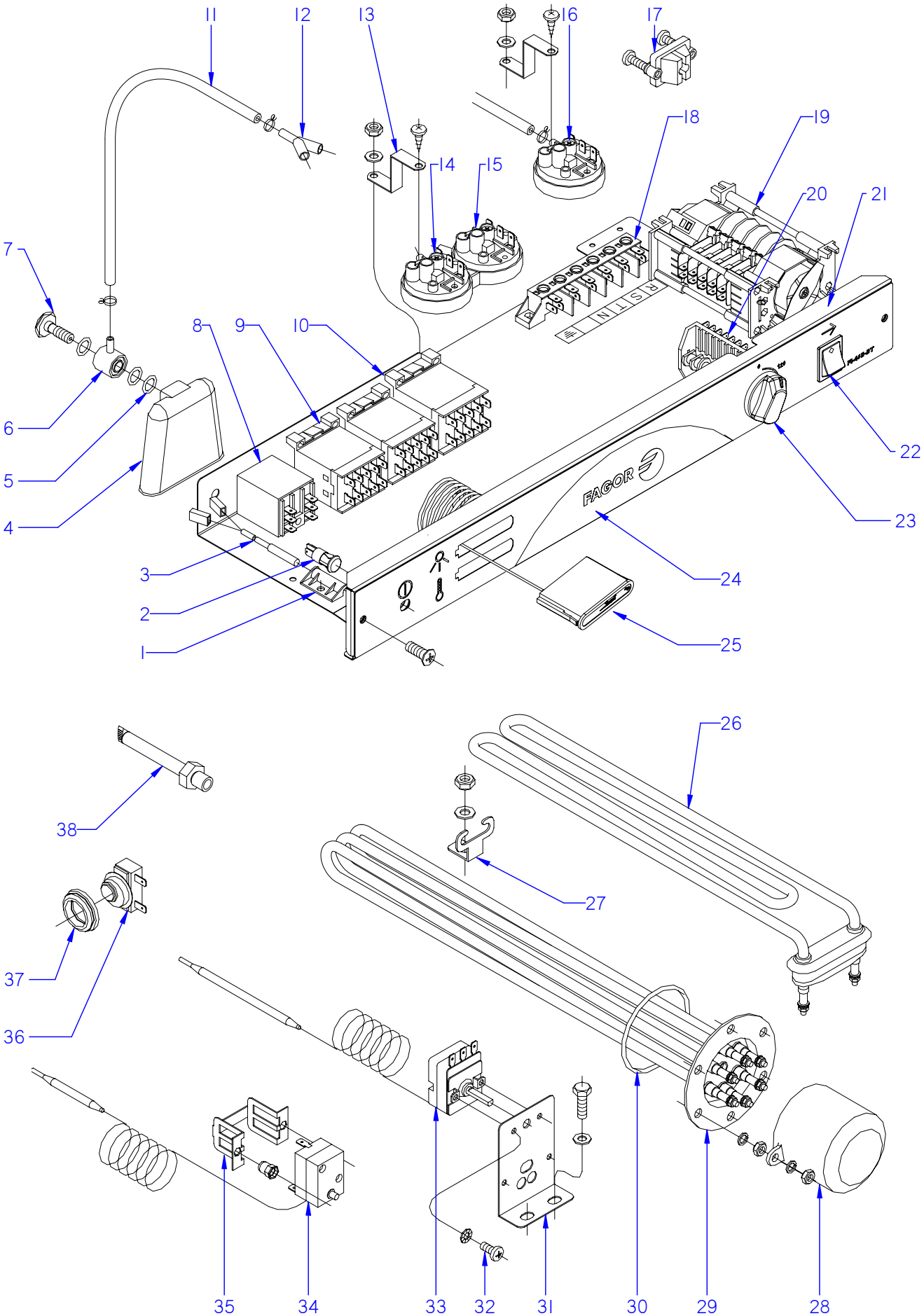


ITEM MARCADO EN COLOR = REPUESTO RECOMENDADO
COLOURED ITEM = RECOMMENDED SPARE PART

| N plano | Firma | Fecha | Aparato | PARTE FUNCIONAL ELECTRICA | Lamina | |
|---|---|---|---|---|---|---|
| C-1854 | | 2007-06 | LAVAVAJ. FI-64 C; CLINIC; B-BTUK | | 12 | Fagor Industrial S.Coop. FAGOR Onate |

| MOD. | LAVAVAJILLAS DE APERTURA FRONTAL<br>FRONT LOADING DISHWASHER | ZONA / ZONE | PARTE FUNCIONAL ELECTRICA<br>ELECTRICS FUNCTIONAL PART | PLANO<br>DIAGRAM | C-1854 |
|---|---|---|---|---|---|

| ITEM | CODIGO<br>CODE | DENOMINACION | NAME | FI-64 C | FI-64 B-BTUK | FI-64 HY<br>CLINIC | | | | | NOTAS |
|---|---|---|---|---|---|---|---|---|---|---|---|
| 1 | Z203010000 | AMARRE INTERRUP. MAGNETICO | MAGNETIC SWITCH FASTENER | 1 | 1 | 1 | | | | | |
| | Q152004000 | TORNIL, APLASTADO M5x13 A304 | FLAT HEADED BOLT M5x13 A304 | 1 | 1 | 1 | | | | | |
| | Q232030000 | ARANDELA A5 | WASHER A5 | 1 | 1 | 1 | | | | | |
| | Q162030000 | TUERCA EXAGONAL M5 | HEXAGONAL NUT M5 | 1 | 1 | 1 | | | | | |
| 2 | R693056000 | PILOTO AMBAR 41227000A4 | AMBER PILOT 41227000A4 | 1 | 1 | 1 | | | | | |
| 3 | Z203009000 | INTERRUPTOR MAGNETICO | MAGNETIC SWITCH | 1 | 1 | 1 | | | | | |
| 4 | Z203011000 | CAMARA PRESOSTATO | PRESSURE SWITCH | 1 | 1 | 1 | | | | | |
| 5 | Q307003000 | JUNTA TORICA 16.01X10.77X2.62 | O-RING 16.01X10.77X2.62 | 3 | 3 | 3 | | | | | |
| 6 | Z203012000 | EMPALME PRESOSTATO | PRESSURE SWITCH CONNEX | 1 | 1 | 1 | | | | | |
| 7 | Z203013000 | TORNILLO PRESOSTATO | PRESSURE SWITCH BOLT | 1 | 1 | 1 | | | | | |
| 8 | Z203062000 | RELE 230V. 16A 50-60 HZ | RELAY 230V. 16A 50-60 HZ | 1 | 1 | 1 | | | | | |
| 9 | Z213007000 | CONTACTOR 230 V. 50-60 HZ | CONTACTOR 230 V. 50-60 HZ | 2 | 2 | 2 | | | | | |
| 9 | Z213007000 | CONTACTOR 230 V. 50-60 HZ | CONTACTOR 230 V. 50-60 HZ | 1 | 1 | 1 | | | | | ELIMINADO 01.11.08 |
| 9 | Z203050000 | CONTACTOR SIRIUS 3R 230V50-60 | CONTACTOR SIRIUS 3R 230V50- | 1 | 1 | 1 | | | | | INTRODUCIDO 01.11.08 |
| 10 | Z683087000 | CONTACTOR 3TF20 01-3AL2 230 | CONTACTOR 3TF20 01-3AL2 230 | _ | 1 | 1 | | | | | |
| 11 | 3702400000 | TUBO GOMA NEGRO Ø 8*4 | BLACK RUBBER PIPE Ø 8*4 | 1 | 1 | 1 | | | | | |
| | P102154000 | BRIDA ELASTICA TUBO | ELASTIC PIPE FLANGE | 2 | 2 | 2 | | | | | |
| 12 | Z103077000 | RACORD EN Y | Y-CONNECTION | 1 | 1 | 1 | | | | | |
| 13 | Z602923000 | SOPORTE PRESOSTATO | PRESSURE SWITCH SUPPORT | 2 | 2 | 2 | | | | | |
| | Q082032000 | TORNILLO ALOMADO BZ-3,5X9,5 | CURVED SCREW BZ-3.5x9.5 | 2 | 2 | 2 | | | | | |
| | Q152004000 | TORNILLO APLASTADO M5x13 | FLAT HEAD SCREW M5X13 | 2 | 2 | 2 | | | | | |
| | Q232030000 | ARANDELA A5 | WASHER A5 | 2 | 2 | 2 | | | | | |
| | Q162030000 | TUERCA EXAGONAL M5 | HEXAGONAL NUT M5 | 2 | 2 | 2 | | | | | |
| 14 | Z203023000 | PRESOSTATO SIMPLE PVS | SIMPLE PVS PRESSURE SWITCH | 1 | 1 | 1 | | | | | |
| 15 | Z223005000 | PRESOSTATO SIMPLE P.V.S. | SIMPLE P.V.S. PRESSURE SWITC | 1 | 1 | 1 | | | | | |
| 16 | Z213059000 | TRIPLE PRESOSTATO 40-120-150 | TRIPLE PRESSURE SWITCH 40-1 | _ | 1 | 1 | | | | | |
| | Q232040000 | ARANDELA A6 | WASHER A6 | _ | 1 | 1 | | | | | |
| | Q162040000 | TUERCA EXAGONAL M6 | HEXAGONAL NUT M6 | _ | 1 | 1 | | | | | |
| 17 | Z203020000 | RETENEDOR DE CABLE | CABLE HOLDER | 1 | 1 | 1 | | | | | |
| | | | | | | | | | | | |

| MOD. | LAVAVAJILLAS DE APERTURA FRONTAL<br>FRONT LOADING DISHWASHER | ZONA / ZONE | PARTE FUNCIONAL ELECTRICA<br>ELECTRICS FUNCTIONAL PART | PLANO<br>DIAGRAM | C-1854 |
|---|---|---|---|---|---|

| ITEM | CODIGO<br>CODE | DENOMINACION | NAME | FI-64 C | FI-64 B-BTUK | FI-64 HY<br>CLINIC | | | | | NOTAS |
|---|---|---|---|---|---|---|---|---|---|---|---|
| 18 | R253044000 | REGLETA AUXILIAR FV-122 | AUXILIARY TERMINAL STRIP FV- | 1 | 1 | 1 | | | | | |
| | Z213005000 | ROTULO ADHESIVO | ADHESIVE LABEL | 1 | 1 | 1 | | | | | |
| | Q152004000 | TORNILLO APLASTADO M5x13 | FLAT HEAD SCREW M5X13 | 2 | 2 | 2 | | | | | |
| | Q232030000 | ARANDELA A5 | WASHER A5 | 2 | 2 | 2 | | | | | |
| | Q162030000 | TUERCA EXAGONAL M5 | HEXAGONAL NUT M5 | 2 | 2 | 2 | | | | | |
| 19 | Z243004000 | PROGRAMADOR CICLO | CYCLE PROGRAMMER | 1 | _ | _ | | | | | |
| 19 | Z243001000 | PROGRAMADOR CICLO | CYCLE PROGRAMMER | _ | 1 | 1 | | | | | |
| | Q032021000 | TORNILLO ALOMADO M4x10 | CURVED SCREW M4X10 | 2 | 2 | 2 | | | | | |
| | Q162020000 | TUERCA EXAGONAL M4 | HEXAGONAL NUT M4 | 2 | 2 | 2 | | | | | |
| | Z203007000 | CASQUILLO | BUSHING | 2 | 2 | 2 | | | | | |
| | Q041324000 | TORN. AVELLA. M4x25 H.ZINCADO | COUNTERSUNK NUT M4x25 H.ZI | 2 | 2 | 2 | | | | | |
| 20 | Z223001000 | CONMUTADOR DE FUNCIONES | FUNCTIONS SWITCH | 1 | 1 | 1 | | | | | |
| 21 | Z202918000 | FRENTE COMPLETO | COMPLETE FRONT | 1 | 1 | 1 | | | | | |
| | Q152004000 | TORNILLO APLASTADO M5x13 | FLAT HEAD SCREW M5X13 | 2 | 2 | 2 | | | | | |
| 22 | Z203080000 | PULSADOR MARCHA NEGRO | BLACK RUN BUTTON | 1 | 1 | 1 | | | | | |
| 23 | Z203069000 | BOTON DE MANDO | CONTROL BUTTON | 1 | 1 | 1 | | | | | |
| 24 | Z208919000 | EMBELLE. ADHESIVO FI-64 C | ADHESIVE TRIM FI-64 C | 1 | _ | _ | | | | | |
| 24 | Z258950000 | EMBELLEC. ADHESIVO FI-64 B-BT | TRIM ADHESIVE FI-64 B-BT | _ | 1 | _ | | | | | |
| 24 | Z257417000 | EMBELLE. ADHESIVO FI-64 CLINIC | ADHESIVE TRIM FI-64 CLINIC | _ | _ | 1 | | | | | |
| | Q152024000 | TORNIL. AVELLANADO M4X8 A304 | COUNTERSUNK BOLT M4X8 A30 | 2 | 2 | 2 | | | | | |
| 25 | Z203072000 | INDICADOR ANALOGICO | ANALOG INDICATOR | 2 | 2 | 2 | | | | | |
| 26 | Z203601000 | RESISTENCIA TANQUE | TANK RESISTOR | 1 | 1 | 1 | | | | | |
| 27 | Z603602000 | SOPORTE RESISTENCIA TANQUE | TANK RESISTOR SUPPORT | 1 | 1 | 1 | | | | | |
| | Q232040000 | ARANDELA A6 | WASHER A6 | 1 | 1 | 1 | | | | | |
| | Q162040000 | TUERCA EXAGONAL M6 | HEXAGONAL NUT M6 | 1 | 1 | 1 | | | | | |
| 28 | Z651731000 | CAPERUZA RESISTEN. CALDERIN | DRUM RESIST. CAP | 1 | 1 | 1 | | | | | ELIMINADO 10.04.09 |
| 28 | Z101723000 | CAPERUZA RESISTEN. CALDERIN | DRUM RESIST. CAP | 1 | 1 | 1 | | | | | INTRODUCIDO 10.04.09 |
| | Q163140000 | TUERCA EXAGONAL M6 LATON | HEXAGONAL NUT M6 BRASS | 2 | 2 | 2 | | | | | |
| | Q012031000 | TORNIL. EXAGONAL M5x10 A.304 | HEXAGONAL BOLT M5X10 A.304 | 2 | 2 | 2 | | | | | |
| | Q232030000 | ARANDELA A5 | WASHER A5 | 2 | 2 | 2 | | | | | |
| | Q012063000 | TORNIL. EXAGONAL M10x20 A.304 | HEXAGONAL BOLT M10X20 A.30 | 2 | 2 | 2 | | | | | |

| MOD. | LAVAVAJILLAS DE APERTURA FRONTAL<br>FRONT LOADING DISHWASHER | ZONA / ZONE | PARTE FUNCIONAL ELECTRICA<br>ELECTRICS FUNCTIONAL PART | PLANO<br>DIAGRAM | C-1854 |
|---|---|---|---|---|---|

| ITEM | CODIGO<br>CODE | DENOMINACION | NAME | FI-64 C | FI-64 B-BTUK | FI-64 HY<br>CLINIC | | | | | NOTAS |
|---|---|---|---|---|---|---|---|---|---|---|---|
| 29 | Z241701000 | RESISTENCIA CALDERIN | DRUM RESISTOR | 1 | 1 | 1 | | | | | |
| | Q221305000 | TUERCA EX.AUTO M4 ZINCADA | EX.AUTO NUT M4 ZINC-COATED | 6 | 6 | 6 | | | | | |
| | Q163140000 | TUERCA EXAGONAL M6 LATON | HEXAGONAL NUT M6 BRASS | 6 | 6 | 6 | | | | | |
| | Q262040000 | ARANDELA GROW. A6 A.304 | WASHER GROW. A6 A.304 | 6 | 6 | 6 | | | | | |
| 30 | Q307048000 | JUNTA TORICA 9.12x16.18x3.53 | O-RING 9.12x16.18x3.53 | 1 | 1 | 1 | | | | | |
| 31 | Z203047000 | SOPORTE TERMOSTATOS | THERMOSTAT SUPPORT | 1 | 1 | 1 | | | | | |
| | Q012031000 | TORNIL. EXAGONAL M5X10 A.304 | HEXAGONAL BOLT M5X10 A.304 | 2 | 2 | 2 | | | | | |
| | Q232030000 | ARANDELA A5 | WASHER A5 | 2 | 2 | 2 | | | | | |
| 32 | Q152024000 | TORNIL. AVELLANADO M4X8 A304 | COUNTERSUNK BOLT M4X8 A304 | 2 | 2 | 2 | | | | | |
| 33 | Z203014000 | TERMOSTATO CALDERIN | WASH DRUM THERMOSTAT | 1 | 1 | 1 | | | | | ELIMINADO 01.11.2012 |
| 33 | 12040858 | TERMOSTATO CALDERIN | WASH DRUM THERMOSTAT | 1 | 1 | 1 | | | | | INTRODUCIDO 01.11.2012 |
| 34 | Z213014000 | LIMITADOR TECASA P. | LIMITER TECASA P. | 1 | 1 | 1 | | | | | |
| 35 | Z203060000 | AMARRE LIMITADOR TECASA | LIMITER FASTENING TECASA | 1 | 1 | 1 | | | | | |
| | Q221341000 | REMACHE EXAGONAL M4 | HEXAGONAL RIVET M4 | 2 | 2 | 2 | | | | | |
| | Q152024000 | TORNIL. AVELLANADO M4X8 A304 | COUNTERSUNK BOLT M4X8 A304 | 2 | 2 | 2 | | | | | |
| 36 | Z718405000 | TERMOSTATO DOBLE | DOUBLE THERMOSTAT | 1 | _ | | | | | | |
| 36 | Z718441000 | TERMOSTATO DOBLE W | DOUBLE THERMOSTAT W | _ | 1 | _ | | | | | ELIMINADO 03.07.07 |
| 36 | Z718441000 | TERMOSTATO DOBLE W | DOUBLE THERMOSTAT W | _ | _ | 1 | | | | | |
| 37 | N503017000 | SOPORTE TERMOSTATO 1001713 | THERMOSTAT SUPPORT 1001713 | 1 | 1 | 1 | | | | | |
| 38 | Z263002000 | VAINA INDICADOR COMPLETA | COMPLETE INDICATOR SHELL | 1 | 1 | 1 | | | | | |
| | Q306024000 | JUNTA TORICA 18x12,5x1,5 | O-RING 18x12.5x1.5 | 1 | 1 | 1 | | | | | |
| | Q162070000 | TUERCA EXAGONAL M12 | HEXAGONAL NUT M12 | 1 | 1 | 1 | | | | | |
| | | | | | | | | | | | |
| | | | | | | | | | | | |
| | | | | | | | | | | | |
| | | | | | | | | | | | |
| | | | | | | | | | | | |
| | | | | | | | | | | | |
| | | | | | | | | | | | |
| | | | | | | | | | | | |
| | | | | | | | | | | | |

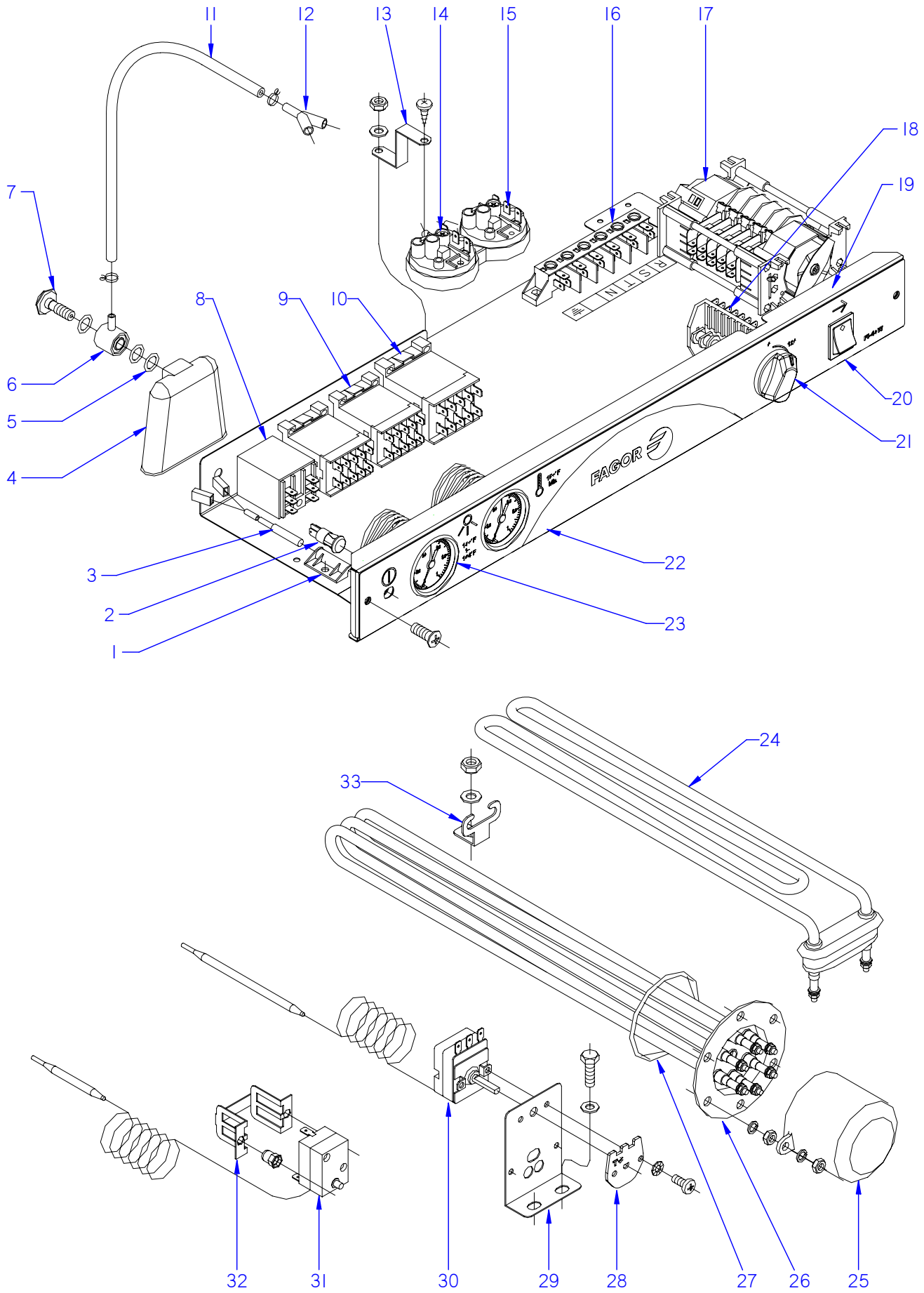


ITEM MARCADO EN COLOR = REPUESTO RECOMENDADO
COLOURED ITEM = RECOMMENDED SPARE PART

| N plano | Firma | Fecha | Aparato | | Lamina | |
|---|---|---|---|---|---|---|
| C-1855 | | 2007-06 | PARTE FUNCIONAL ELECTRICA<br>LAVAVAJILLAS FI-64W | | 13 | Fagor Industrial S.Coop. FAGOR<br>Oñate |

| MOD. | LAVAVAJILLAS DE APERTURA FRONTAL<br>FRONT LOADING DISHWASHER | ZONA / ZONE | PARTE FUNCIONAL ELECTRICA<br>ELECTRICS FUNCTIONAL PART | PLANO<br>DIAGRAM | C-1855 |
|---|---|---|---|---|---|

| ITEM | CODIGO<br>CODE | DENOMINACION | NAME | FI-64 W | | | | | | | NOTAS |
|---|---|---|---|---|---|---|---|---|---|---|---|
| 1 | Z203010000 | AMARRE INTERRUP. MAGNETICO | MAGNETIC SWITCH FASTENER | 1 | | | | | | | |
| | Q152004000 | TORNIL, APLASTADO M5x13 A304 | FLAT HEADED BOLT M5x13 A304 | 1 | | | | | | | |
| | Q232030000 | ARANDELA A5 | WASHER A5 | 1 | | | | | | | |
| | Q162030000 | TUERCA EXAGONAL M5 | HEXAGONAL NUT M5 | 1 | | | | | | | |
| 2 | R693056000 | PILOTO AMBAR 41227000A4 | AMBER PILOT 41227000A4 | 1 | | | | | | | |
| 2 | R693056000 | PILOTO AMBAR 41227000A4 | AMBER PILOT 41227000A4 | 1 | | | | | | | INTRODUCIDO 01.01.10 |
| 3 | Z203009000 | INTERRUPTOR MAGNETICO | MAGNETIC SWITCH | 1 | | | | | | | |
| 4 | Z203011000 | CAMARA PRESOSTATO | PRESSURE SWITCH | 1 | | | | | | | |
| 5 | Q307003000 | JUNTA TORICA 16.01X10.77X2.62 | O-RING 16.01X10.77X2.62 | 3 | | | | | | | |
| 6 | Z203012000 | EMPALME PRESOSTATO | PRESSURE SWITCH CONNEX | 1 | | | | | | | |
| 7 | Z203013000 | TORNILLO PRESOSTATO | PRESSURE SWITCH BOLT | 1 | | | | | | | |
| 8 | Z203062000 | RELE 230V. 16A 50-60 HZ | RELAY 230V. 16A 50-60 HZ | 1 | | | | | | | |
| | Q162050000 | TUERCA EXAGONAL M8x1 INOX. | HEXAGONAL NUT M8x1 INOX. | 1 | | | | | | | |
| | Q261050000 | ARANDELA MUELLE A8 | SPRING WASHER A8 | 1 | | | | | | | |
| 9 | Z213007000 | CONTACTOR 230 V. 50-60 HZ | CONTACTOR 230 V. 50-60 HZ | 2 | | | | | | | |
| 9 | Z213007000 | CONTACTOR 230 V. 50-60 HZ | CONTACTOR 230 V. 50-60 HZ | 1 | | | | | | | ELIMINADO 01.11.08 |
| 9 | Z203050000 | CONTACTOR SIRIUS 3R 230V50-60 | CONTACTOR SIRIUS 3R 230V50- | 1 | | | | | | | INTRODUCIDO 01.11.08 |
| 10 | Z683087000 | CONTACTOR 3TF20 01-3AL2 230 | CONTACTOR 3TF20 01-3AL2 230 | 1 | | | | | | | |
| | Q032021000 | TORNILLO ALOMADO M4x10 | CURVED SCREW M4X10 | 2 | | | | | | | |
| | Q162020000 | TUERCA EXAGONAL M4 | HEXAGONAL NUT M4 | 2 | | | | | | | |
| 11 | 3702400000 | TUBO GOMA NEGRO Ø 8*4 | BLACK RUBBER PIPE Ø 8*4 | 1 | | | | | | | |
| | P102154000 | BRIDA ELASTICA TUBO | ELASTIC PIPE FLANGE | 2 | | | | | | | |
| 12 | Z103077000 | RACORD EN Y | Y-CONNECTION | 1 | | | | | | | |
| 13 | Z602923000 | SOPORTE PRESOSTATO | PRESSURE SWITCH SUPPORT | 1 | | | | | | | |
| | Q082032000 | TORNILLO ALOMADO BZ-3,5X9,5 | CURVED SCREW BZ-3.5x9.5 | 1 | | | | | | | |
| | Q152004000 | TORNILLO APLASTADO M5x13 | FLAT HEAD SCREW M5X13 | 1 | | | | | | | |
| | Q232030000 | ARANDELA A5 | WASHER A5 | 1 | | | | | | | |
| | Q162030000 | TUERCA EXAGONAL M5 | HEXAGONAL NUT M5 | 1 | | | | | | | |
| 14 | Z203023000 | PRESOSTATO SIMPLE PVS | SIMPLE PVS PRESSURE SWITCH | 1 | | | | | | | |
| 15 | Z223005000 | PRESOSTATO SIMPLE P.V.S. | SIMPLE P.V.S. PRESSURE SWITC | 1 | | | | | | | |
| | | | | | | | | | | | |

| MOD. | LAVAVAJILLAS DE APERTURA FRONTAL<br>FRONT LOADING DISHWASHER | ZONA / ZONE | PARTE FUNCIONAL ELECTRICA<br>ELECTRICS FUNCTIONAL PART | PLANO<br>DIAGRAM | C-1855 |
|---|---|---|---|---|---|

| ITEM | CODIGO<br>CODE | DENOMINACION | NAME | FI-64 W | | | | | | | NOTAS |
|---|---|---|---|---|---|---|---|---|---|---|---|
| 16 | R253044000 | REGLETA AUXILIAR FV-122 | AUXILIARY TERMINAL STRIP FV- | 1 | | | | | | | |
| | Z213005000 | ROTULO ADHESIVO | ADHESIVE LABEL | 1 | | | | | | | |
| | Q152004000 | TORNILLO APLASTADO M5x13 | FLAT HEAD SCREW M5X13 | 2 | | | | | | | |
| | Q232030000 | ARANDELA A5 | WASHER A5 | 2 | | | | | | | |
| | Q162030000 | TUERCA EXAGONAL M5 | HEXAGONAL NUT M5 | 2 | | | | | | | |
| 17 | Z258412000 | PROGRAMADOR 60HZ.T.STOP | PROGRAMMER 60HZ.T.STOP | 1 | | | | | | | |
| 18 | Z223001000 | CONMUTADOR DE FUNCIONES | FUNCTIONS SWITCH | 1 | | | | | | | |
| | Z203007000 | CASQUILLO | BUSHING | 2 | | | | | | | |
| | Q041324000 | TORN. AVELLA. M4x25 H.ZINCADO | COUNTERSUNK NUT M4x25 H.ZI | 2 | | | | | | | |
| 19 | Z208908000 | FRENTE COMPLETO AF W | COMPLETE FRONT AF W | 1 | | | | | | | |
| | Q152004000 | TORNILLO APLASTADO M5x13 | FLAT HEAD SCREW M5X13 | 2 | | | | | | | |
| | 3713500000 | PERFIL CUBREARISTAS PLASTICO | PLASTIC EDGE COVER PROFILE | 1 | | | | | | | |
| 20 | Z203080000 | PULSADOR MARCHA NEGRO | BLACK RUN BUTTON | 1 | | | | | | | ELIMINADO 01.01.10 |
| 20 | Z513022000 | PULSADOR NEGRO | BLACK BUTTON | 1 | | | | | | | INTRODUCIDO 01.01.10 |
| | Q032021000 | TORNILLO ALOMADO M4x10 | CURVED SCREW M4X10 | 2 | | | | | | | |
| | Q162020000 | TUERCA EXAGONAL M4 | HEXAGONAL NUT M4 | 2 | | | | | | | |
| 21 | Z203069000 | BOTON DE MANDO | CONTROL BUTTON | 1 | | | | | | | |
| 22 | Z248903000 | EMBELLECEDOR ADHES. FI-64 W | ADHES. TRIM FI-64 W | 1 | | | | | | | |
| 23 | Z273060000 | TERMOMETRO W NSF | THERMOMETER W NSF | 2 | | | | | | | |
| 24 | Z203601000 | RESISTENCIA TANQUE | TANK RESISTOR | 1 | | | | | | | |
| 25 | Z651731000 | CAPERUZA RESISTEN. CALDERIN | DRUM RESIST. CAP | 1 | | | | | | | ELIMINADO 10.04.09 |
| 25 | Z101723000 | CAPERUZA RESISTEN. CALDERIN | DRUM RESIST. CAP | 1 | | | | | | | INTRODUCIDO 10.04.09 |
| | Q163140000 | TUERCA EXAGONAL M6 LATON | HEXAGONAL NUT M6 BRASS | 2 | | | | | | | |
| | Q012031000 | TORNIL. EXAGONAL M5x10 A.304 | HEXAGONAL BOLT M5X10 A.304 | 2 | | | | | | | |
| | Q232030000 | ARANDELA A5 | WASHER A5 | 2 | | | | | | | |
| 26 | Z241703000 | RESISTENCIA W CALDERIN | DRUM RESISTOR W | 1 | | | | | | | |
| | Q221305000 | TUERCA EX.AUTO M4 ZINCADA | EX.AUTO NUT M4 ZINC-COATED | 6 | | | | | | | |
| | Q163140000 | TUERCA EXAGONAL M6 LATON | HEXAGONAL NUT M6 BRASS | 6 | | | | | | | |
| | Q262040000 | ARANDELA GROW. A6 A.304 | WASHER GROW. A6 A.304 | 6 | | | | | | | |
| 27 | Q307035000 | JUNTA TORICA AN-36 282333 | O-RING AN-36 282333 | 1 | | | | | | | |
| 28 | Z208438000 | CHAPA W TC 90ºC | PLATE W TC 90ºC | 1 | | | | | | | |

| MOD. | LAVAVAJILLAS DE APERTURA FRONTAL<br>FRONT LOADING DISHWASHER | ZONA / ZONE | PARTE FUNCIONAL ELECTRICA<br>ELECTRICS FUNCTIONAL PART | PLANO<br>DIAGRAM | C-1855 |
|---|---|---|---|---|---|

| ITEM | CODIGO<br>CODE | DENOMINACION | NAME | FI-64 W | | | | | | | NOTAS |
|---|---|---|---|---|---|---|---|---|---|---|---|
| 29 | Z203047000 | SOPORTE TERMOSTATOS | THERMOSTAT SUPPORT | 1 | | | | | | | |
| | Q012031000 | TORNIL. EXAGONAL M5X10 A.304 | HEXAGONAL BOLT M5X10 A.304 | 2 | | | | | | | |
| | Q232030000 | ARANDELA A5 | WASHER A5 | 2 | | | | | | | |
| | Q152024000 | TORNIL. AVELLANADO M4X8 A304 | COUNTERSUNK BOLT M4X8 A304 | 6 | | | | | | | |
| 30 | Z203014000 | TERMOSTATO CALDERIN | WASH DRUM THERMOSTAT | 1 | | | | | | | ELIMINADO 01.11.2012 |
| 30 | 12040858 | TERMOSTATO CALDERIN | WASH DRUM THERMOSTAT | 1 | | | | | | | INTRODUCIDO 01.11.2012 |
| 31 | Z213014000 | LIMITADOR TECASA P. | LIMITER TECASA P. | 1 | | | | | | | |
| 32 | Z203060000 | AMARRE LIMITADOR TECASA | LIMITER FASTENING TECASA | 1 | | | | | | | |
| | Q221341000 | REMACHE EXAGONAL M4 | HEXAGONAL RIVET M4 | 2 | | | | | | | |
| | Q152024000 | TORNIL. AVELLANADO M4X8 A304 | COUNTERSUNK BOLT M4X8 A304 | 2 | | | | | | | |
| 33 | Z603602000 | SOPORTE RESISTENCIA TANQUE | TANK RESISTOR SUPPORT | 1 | | | | | | | |
| | Q232040000 | ARANDELA A6 | WASHER A6 | 1 | | | | | | | |
| | Q162040000 | TUERCA EXAGONAL M6 | HEXAGONAL NUT M6 | 1 | | | | | | | |

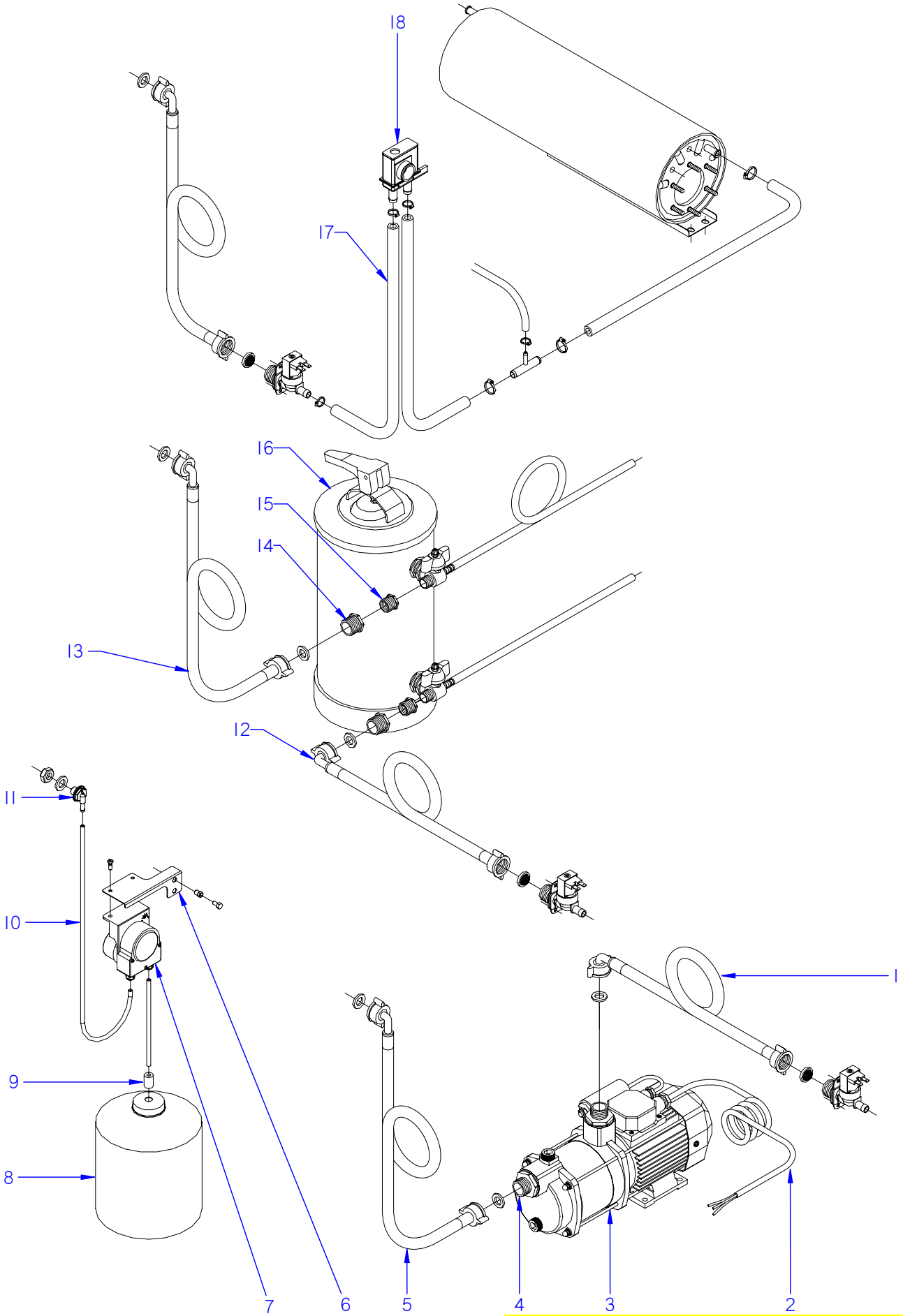


ITEM MARCADO EN COLOR = REPUESTO RECOMENDADO
COLOURED ITEM = RECOMMENDED SPARE PART

| N plano | Firma | Fecha | Aparato | ACCESORIOS | Lamina | |
|---|---|---|---|---|---|---|
| C-1856 | | 2007-06 | LAVAVAJILLAS FI-64 | | 14 | Fagor Industrial S.Coop. FAGOR Oñate |

| MOD. | LAVAVAJILLAS DE APERTURA FRONTAL<br>FRONT LOADING DISHWASHER | ZONA / ZONE | ACCESORIOS PARA LAVAVAJILLAS<br>ACCESSORIES FOR DISHWASHERS | PLANO<br>DIAGRAM | C-1856 |
|---|---|---|---|---|---|

| ITEM | CODIGO<br>CODE | DENOMINACION | NAME | FI-64 | FI-64 B | | | | | | |
|---|---|---|---|---|---|---|---|---|---|---|---|
| | **1200000125** | **KIT BOMBA PRESION** | **PRESSURE PUMP KIT** | | | | | | | | |
| 1 | _ | MANGUERA DE MAQUINA | MACHINE HOSE | - | - | | | | | | |
| 2 | Z209510000 | CABLEADO BOMBA PRESION | PRESSURE PUMP WIRING | 1 | 1 | | | | | | |
| 3 | Z209508000 | BOMBA PRESION PRISMA 15 | PRESSURE PUMP PRISMA 15 | 1 | 1 | | | | | | |
| 4 | Z209509000 | MANGUITO | HOSE | 2 | 2 | | | | | | |
| 5 | Z602121000 | MANGUERA ENTRADA AGUA | WATER INTAKE HOSE | 1 | 1 | | | | | | |
| | Q306037000 | ARANDELA Ø42.5X32X1.5 | WASHER Ø42.5X32X1.5 | 2 | 2 | | | | | | |
| | | | | | | | | | | | |
| | | | | | | | | | | | |
| | **1200000132** | **KIT DOSIFICADOR DETERGENTE** | **DETERGENT DISPENSER KIT** | | | | | | | | |
| 6 | Z208434000 | SOPORTE DOSIFICADOR W | DISPENSER SUPPORT W | 1 | 1 | | | | | | |
| | Q411304000 | REMACHE AVIBULB Ø4,8 | AVIBULB RIVET Ø4.8 | 2 | 2 | | | | | | |
| | Q221342000 | REMACHE EXAGONAL M5 | HEXAGONAL RIVET M5 | 2 | 2 | | | | | | |
| | Q012031000 | TORNIL.EXAGONAL M5X10 A.304 | HEX BOLT M5X10 A.304 | 2 | 2 | | | | | | |
| | Q232030000 | ARANDELA A5 | WASHER A5 | 2 | 2 | | | | | | |
| | Q162030000 | TUERCA EXAGONAL M5 | HEXAGONAL NUT M5 | 2 | 2 | | | | | | |
| 7 | Z208903000 | DOSIFIC. DGTE REGULABLE G300 | DETERGENT DISP. ADJUST. G30 | 1 | 1 | | | | | | |
| 8 | - | GARRAFA DETERGENTE | DETERGENT CONTAINER | 1 | 1 | | | | | | |
| 9 | Z701152000 | PESO FILTRO | FILTER WEIGHT | 1 | 1 | | | | | | |
| 10 | Z448614000 | CONDUCTO ASPIRACIÓN | EXTRACTOR PIPE | 1 | 1 | | | | | | |
| 11 | Z230902000 | PASAMUROS DETERGENTE | DETERGENT WALL BUSHING | 1 | 1 | | | | | | |
| | Q306024000 | JUNTA Ø18X12.5X1.5 | SEAL Ø18X12.5X1.5 | 1 | 1 | | | | | | |
| | Q162070000 | TUERCA EXAGONAL M12 | HEXAGONAL NUT M12 | 1 | 1 | | | | | | |
| S/Nº | Z208904000 | CABLEADO DOSIFICADOR DTGTE | DETERGENT DISP. WIRING | 1 | 1 | | | | | | |
| | | | | | | | | | | | |
| | | | | | | | | | | | |
| | | | | | | | | | | | |
| | | | | | | | | | | | |
| | | | | | | | | | | | |
| | | | | | | | | | | | |
| | | | | | | | | | | | |

| MOD. | LAVAVAJILLAS DE APERTURA FRONTAL<br>FRONT LOADING DISHWASHER | ZONA / ZONE | ACCESORIOS PARA LAVAVAJILLAS<br>ACCESSORIES FOR DISHWASHERS | PLANO<br>DIAGRAM | C-1856 |
|---|---|---|---|---|---|

| ITEM | CODIGO<br>CODE | DENOMINACION | NAME | FI-64 | FI-64 B | | | | | | NOTAS |
|---|---|---|---|---|---|---|---|---|---|---|---|
| | **1200000128** | **KIT DESCALCIFICADOR 12 L** | **WATER SOFTENER KIT 12 L** | | | | | | | | |
| 12 | - | MANGUERA DE MAQUINA | MACHINE HOSE | - | - | | | | | | |
| 13 | Z602121000 | MANGUERA ENTRADA AGUA | WATER INTAKE HOSE | 1 | 1 | | | | | | |
| 14 | Z209515000 | TUERCA REDUCCION 3/4" - 1/2" | REDUCTION NUT 3/4" - 1/2" | 2 | 2 | | | | | | |
| 15 | Z209516000 | TUERCA REDUCCION 1/2" - 3/8" | REDUCTION NUT 1/2" - 3/8" | 2 | 2 | | | | | | |
| 16 | Z209507000 | DESCALCIFICADOR DE 12 L | WATER SOFTENER 12 L | 1 | 1 | | | | | | |
| | | | | | | | | | | | |
| | | | | | | | | | | | |
| | **1200000130** | **KIT VALVULA ANTIRRETORNO** | **NON-RETURN VALVE KIT** | | | | | | | | |
| 17 | 3676900000 | TUBO DE GOMA NEGRA Ø17x10 | BLACK RUBBER PIPE Ø17x10 | 2 | 2 | | | | | | |
| | Q881302000 | ABRAZADERA 12 - 20 | CLAMP 12 - 20 | 2 | 2 | | | | | | |
| 18 | Z231106000 | VALVULA ANTIRRETORNO | NON-RETURN VALVE | 1 | 1 | | | | | | |

| MOD. | LAVAVAJILLAS DE APERTURA FRONTAL<br>FRONT LOADING DISHWASHER | ZONA / ZONE | VARIOS / MISCELLANEOUS | |
|---|---|---|---|---|

| ITEM | CODIGO<br>CODE | DENOMINACION | NAME | FI-64 | FI-64 B | FI-64 C | FI-64 D | FI-64 W | FI-64 B-BTUK | FI-64 HY<br>CLINIC | NOTAS |
|---|---|---|---|---|---|---|---|---|---|---|---|
| | Z246131000 | FOLLETO DE INSTRUCCIONES | INSTRUCTION LEAFLET | 1 | 1 | 1 | 1 | _ | 1 | 1 | ELIMINADO 21.04.11 |
| | Z206131000 | FOLLETO DE INSTRUCCIONES | INSTRUCTION LEAFLET | 1 | 1 | 1 | 1 | _ | 1 | 1 | INTRODUCIDO 21.04.11 |
| | Z208432000 | FOLLETO INSTRUCCIONES W | INSTRUCTION LEAFLET W | _ | _ | _ | _ | 1 | _ | _ | |
| | Z243049000 | ESQUEMA TEORICO FI-64 | THEORETICAL DIAGRAM FI-64 | 1 | _ | _ | _ | _ | _ | _ | PLANO HC-17891 |
| | Z253047000 | ESQUEMA TEORICO FI-64 B | THEORETICAL DIAGRAM FI-64 B | _ | 1 | 1 | _ | _ | _ | _ | PLANO HC-17893 |
| | Z247803000 | ESQUEMA TEORICO FI-64 D | THEORETICAL DIAGRAM FI-64 D | _ | _ | _ | 1 | _ | _ | _ | PLANO HC-17979 |
| | Z257414000 | ESQUEMA TEORICO FI-64 CLINIC | THEORETICAL DIAGRAM FI-64 CI | _ | _ | _ | _ | _ | 1 | 1 | PLANO HC-17888 |
| | Z258439000 | ESQUEMA TEORICO FI-64 W | THEORETICAL DIAGRAM FI-64 W | _ | _ | _ | _ | 1 | _ | _ | PLANO HC-17993 |
| | Z243050000 | PLANO DE MONTAJE FI-64 | ASSEMBLY PLAN F1-64 | 1 | _ | _ | _ | _ | _ | _ | PLANO HC-17896 |
| | Z253048000 | PLANO DE MONTAJE FI-64 B | ASSEMBLY PLAN F1-64 B | _ | 1 | 1 | _ | _ | _ | _ | PLANO HC-17898 |
| | Z247804000 | PLANO DE MONTAJE FI-64 D | ASSEMBLY PLAN F1-64 D | _ | _ | _ | 1 | _ | _ | _ | PLANO HC-17978 |
| | Z257412000 | PLANO DE MONTAJE FI-64 CLINIC | ASSEMBLY PLAN F1-64 CLINIC | _ | _ | _ | _ | _ | 1 | 1 | PLANO HC-17889 |
| | Z258438000 | PLANO DE MONTAJE FI-64 W | ASSEMBLY PLAN F1-64 W | _ | _ | _ | _ | 1 | _ | _ | PLANO HC-17991 |
| | | | | | | | | | | | |
| | Z243048000 | CABLEADO FI-64 | WIRING FI-64 | 1 | _ | _ | _ | _ | _ | _ | |
| | Z253046000 | CABLEADO BOMBA DESAGUE | DRAINAGE PUMP WIRING | _ | 1 | 1 | _ | 1 | _ | _ | |
| | Z213056000 | CABLEADO FI-64 D | WIRING FI-64 D | _ | _ | _ | 1 | _ | _ | _ | |
| | Z257413000 | CABLEADO CLINIC LINE | WIRING CLINIC LINE | _ | _ | _ | _ | _ | 1 | 1 | ELIMINADO 03.04.09 |
| | Z243047000 | CABLEADO TERMO STOP FI-64W | THERMOSTOP WIRING FI-64W | _ | _ | _ | _ | 1 | _ | _ | |
| | Z208436000 | CABLEADO PROLONG. TSTOP | WIRING EXTENSION TSTOP | _ | _ | _ | _ | 1 | _ | _ | |
| | Z208904000 | CABLEADO DOSIFICADOR DETER. | WIRING DETERG. DISPENSER | _ | _ | _ | 1 | 1 | _ | _ | INTRODUCIDO 15.06.09 |
| | Z258971000 | CABLEADO HY-BBT 48-64 | WIRING HY-BBT 48-64 | _ | _ | _ | _ | _ | 1 | 1 | INTRODUCIDO 01.02.08 |
| | Z208917000 | CABLEADO DD-DA G650 | WIRING DD-DA G650 | _ | _ | _ | _ | _ | 1 | 1 | INTRODUCIDO 03.04.09 |
| | Z243046000 | INSTALACION ELECTRICA FI-64 | ELECTRIC INSTALLATION FI-64 | 1 | 1 | 1 | 1 | 1 | 1 | 1 | |
| | Z208913000 | CABLE ALIMENTACION TRIFASIC 2,5 | TRIFASIC 2,5 SUPPLY CABLE | 1 | 1 | 1 | 1 | 1 | 1 | 1 | INTRODUCIDO 15.09.10 |
| | Z243051000 | LEYENDA LAVAVAJ.APER. FRONTAL | LEGEND FRONT LOADING DISH. | 1 | 1 | 1 | 1 | _ | 1 | 1 | PLANO HC-17900 |
| | | | | | | | | | | | |
| | | | | | | | | | | | |
| | | | | | | | | | | | |
| | | | | | | | | | | | |
| | | | | | | | | | | | |

| MOD. | LAVAVAJILLAS DE APERTURA FRONTAL<br>FRONT LOADING DISHWASHER | ZONA / ZONE | PIEZAS ESPECIFICAS VERSION (220-240V II 60HZ)<br>SPECIFIC PARTS FOR VERSION | PLANO<br>DIAGRAM | |
|---|---|---|---|---|---|

| ITEM | CODIGO<br>CODE | DENOMINACION | NAME | FI-64 | FI-64 B | | | | | | NOTAS |
|---|---|---|---|---|---|---|---|---|---|---|---|
| 12 | Z203511000 | BOMBA DE LAVADO 60 HZ. | WASH PUMP 60 Hz. | 1 | 1 | | | | | | C-1845 |
| 4 | Z223501000 | BOMBA DESAGUE 30W 60HZ | DRAINAGE PUMP 30W 60HZ | _ | 1 | | | | | | C-1847 |
| 17 | Z243054000 | PROGRAMA. CICLO 4 LEVAS 60HZ | PROGRAMME CYCLE 4 CAMS 60H | 1 | 1 | | | | | | C-1852 |

| MOD. | LAVAVAJILLAS DE APERTURA FRONTAL<br>FRONT LOADING DISHWASHER | ZONA / ZONE | PIEZAS ESPECIFICAS PARA RESTOMAT<br>SPECIFIC PARTS FOR RESTOMAT | PLANO<br>DIAGRAM | |
|---|---|---|---|---|---|

| ITEM | CODIGO<br>CODE | DENOMINACION | NAME | KM-64 | | | | | | | NOTAS |
|---|---|---|---|---|---|---|---|---|---|---|---|
| | Z204602000 | ASA CHAPA AF | PLATE HANDLE AF | 1 | | | | | | | |
| | Z244911000 | EMBELLECEDOR ADHESIVO | ADHESIVE TRIM | 1 | | | | | | | |
| | Z212909000 | FRENTE EXTRAIBLE FI-30 | REMOVABLE FRONT FI-30 | 1 | | | | | | | |
| | Z214902000 | BOTON DE MANDO | CONTROL BUTTON | 1 | | | | | | | |
| | Z213033000 | PULSADOR MARCHA | START BUTTON | 1 | | | | | | | |
| | R693055000 | PILOTO VERDE 41227000C7 | GREEN PILOT 41227000C7 | 1 | | | | | | | |

| MOD. | LAVAVAJILLAS DE APERTURA FRONTAL<br>FRONT LOADING DISHWASHER | ZONA / ZONE | PIEZAS ESPECIFICAS PARA MOVILFRIT<br>SPECIFIC PARTS FOR MOVILFRIT | PLANO<br>DIAGRAM | |
|---|---|---|---|---|---|

| ITEM | CODIGO<br>CODE | DENOMINACION | NAME | MLV-50-T | MLV-50-TB | MLV-50-TD | | | | | NOTAS |
|---|---|---|---|---|---|---|---|---|---|---|---|
| | Z208740000 | PUERTA COMPLETA | COMPLETE DOOR | 1 | 1 | 1 | | | | | |
| | Z244401000 | EMBELLEC. ADHESIVO MLV-50-T | TRIM ADHESIVE MLV-50-T | 1 | _ | _ | | | | | |
| | Z254401000 | EMBELLEC. ADHESIVO MLV-50-TB | TRIM ADHESIVE MLV-50-TB | _ | 1 | _ | | | | | |
| | Z244402000 | EMBELLEC. ADHESIVO MLV-50-TD | TRIM ADHESIVE MLV-50-TD | _ | _ | 1 | | | | | |
| | Z212909000 | FRENTE EXTRAIBLE | REMOVABLE FRONT | 1 | 1 | 1 | | | | | |
| | Z663062000 | BOTON DE MANDO | CONTROL BUTTON | 1 | 1 | 1 | | | | | |
| | Z213033000 | PULSADOR MARCHA | START BUTTON | 1 | 1 | 1 | | | | | |
| | R693055000 | PILOTO VERDE 41227000C7 | GREEN PILOT 41227000C7 | 1 | 1 | 1 | | | | | |
| | Z220901000 | BOMBA DESAGUE 30W | DRAINAGE PUMP 30W | _ | 1 | _ | | | | | |
| | Z220904000 | SOPORTE BOMBA DESAGUE | DRAINAGE PUMP SUPPORT | _ | 1 | _ | | | | | |
| | Q242030000 | ARANDELA ABANICO A5 A.304 | FAN WASHER A5 A.304 | _ | 4 | _ | | | | | |
| | Z220902000 | ACUMULADOR 1503019 | ACCUMULATOR 1503019 | _ | 1 | _ | | | | | |
| | Z220903000 | MANGUERA DESAGÜE | DRAINAGE HOSE | _ | 1 | _ | | | | | |
| | Z230902000 | PASAMUROS DETERGENTE | DETERGENT WALL BUSHING | _ | 1 | _ | | | | | |
| | Z228812000 | PANEL FRONTAL B SIN PUERTA | FRONT PANEL B WITHOUT DOOR | _ | 1 | _ | | | | | |
| | Z223005000 | PRESOSTATO SIMPLE P.V.S. | SIMPLE P.V.S. PRESSURE SWITC | _ | 1 | _ | | | | | |
| | Z103077000 | RACORD EN Y | Y-CONNECTION | _ | 1 | _ | | | | | |
| | Z223001000 | CONMUTADOR DE FUNCIONES | FUNCTIONS SWITCH | _ | 1 | 1 | | | | | |
| | Z253046000 | CABLEADO BOMBA DESAGUE | DRAINAGE PUMP WIRING | _ | 1 | _ | | | | | |
| | Z253047000 | ESQUEMA TEORICO FI-64 B | THEORETICAL DIAGRAM FI-64 B | _ | 1 | _ | | | | | PLANO HC-17893 |
| | Z253048000 | PLANO DE MONTAJE FI-64 B | ASSEMBLY PLAN F1-64 B | _ | 1 | _ | | | | | PLANO HC-17898 |
| | Z210352000 | CAJA SOLDADA FI-D | WELDED BOX FI-D | _ | _ | 1 | | | | | |
| | P255001000 | ELECTROVALVULA DOBLE | DOUBLE SOLENOID VALVE | _ | _ | 1 | | | | | |
| | P305013000 | REGULADOR 1L.AMA 255.005 | REGULATOR 1L.AMA 255.005 | _ | _ | 1 | | | | | |
| | 3676900000 | TUBO GOMA NEGRA Ø 17*10 | BLACK RUBBER PIPE 17*10 | _ | _ | 1 | | | | | |
| | Q881302000 | ABRAZADERA 12-20 | CLAMP 12-20 | _ | _ | 6 | | | | | |
| | Z471101000 | DESCALCIFICADOR 4 COLUMNAS | WATER SOFTENER 4 COLUMN | _ | _ | 1 | | | | | |
| | Q152012000 | PERNO SOLD.M6X15 | WELDED ROD M6X15 | _ | _ | 2 | | | | | |
| | Z471102000 | DEPOSITO SOLDADO | WELDED TANK | _ | _ | 1 | | | | | |
| | Z471105000 | FILTRO (BITRON 06281.01) | FILTER (BITRON 06281.01) | _ | _ | 2 | | | | | |
| | Z471106000 | TUERCA (BITRON 27414.00) | NUT (BITRON 27414.00) | _ | _ | 1 | | | | | |

| MOD. | LAVAVAJILLAS DE APERTURA FRONTAL<br>FRONT LOADING DISHWASHER | ZONA / ZONE | PIEZAS ESPECIFICAS PARA MOVILFRIT<br>SPECIFIC PARTS FOR MOVILFRIT | PLANO<br>DIAGRAM | |
|---|---|---|---|---|---|

| ITEM | CODIGO<br>CODE | DENOMINACION | NAME | MLV-50-S | MLV-50-B | MLV-50-D | | | | | NOTAS |
|---|---|---|---|---|---|---|---|---|---|---|---|
| | Z471107000 | JUNTA TUERCA (BITRON 15702.01) | NUT SEAL (BITRON 15702.01) | _ | _ | 1 | | | | | |
| | Z471108000 | TAPON (BITRON 27415.00) | PLUG (BITRON 27415.00) | _ | _ | 1 | | | | | |
| | Z471109000 | JUNTA TAPON (BITRON 06485.02) | PLUG SEAL (BITRON 06485.02) | _ | _ | 1 | | | | | |
| | Z471112000 | SOPORTE INFERIOR DESCALCIF. | LOWER SUPPORT DECALCIF. | _ | _ | 2 | | | | | |
| | Z613003000 | PROGRAMADOR REGENERACION | REGENERATION PROGRAMMER | _ | _ | 1 | | | | | |
| | Z403033000 | PULSADOR ACLARADO | RINSE BUTTON | _ | _ | 1 | | | | | |
| | Z247803000 | ESQUEMA TEORICO FI-64 D | THEORETICAL DIAGRAM FI-64 D | _ | _ | 1 | | | | | PLANO HC-17979 |
| | Z247804000 | PLANO DE MONTAJE FI-64 D | ASSEMBLY PLAN F1-64 D | _ | _ | 1 | | | | | PLANO HC-17978 |

| MOD. | LAVAVAJILLAS DE APERTURA FRONTAL<br>FRONT LOADING DISHWASHER | ZONA / ZONE | PIEZAS ESPECIFICAS PARA CULION<br>SPECIFIC PARTS FOR CULION | PLANO<br>DIAGRAM | |
|---|---|---|---|---|---|

| ITEM | CODIGO<br>CODE | DENOMINACION | NAME | VVL 50 | | | | | | | NOTAS |
|---|---|---|---|---|---|---|---|---|---|---|---|
| | Z218003000 | ESCUADRA AMARRE TAPA | COVER FASTENING BRACKET | 2 | | | | | | | |
| | Z218004000 | ASA COMPLETA | COMPLETE HANDLE | 1 | | | | | | | |
| | Q222030000 | TUERCA AUTOB. M5 | SELF-LOCK NUT M5 | 2 | | | | | | | |
| | Z220901000 | BOMBA DESAGUE 30W | DRAINAGE PUMP 30W | 1 | | | | | | | |
| | Z220904000 | SOPORTE BOMBA DESAGUE | DRAINAGE PUMP SUPPORT | 1 | | | | | | | |
| | Q242030000 | ARANDELA ABANICO A5 A.304 | FAN WASHER A5 A.304 | 4 | | | | | | | |
| | Z220902000 | ACUMULADOR 1503019 | ACCUMULATOR 1503019 | 1 | | | | | | | |
| | Z220903000 | MANGUERA DESAGÜE | DRAINAGE HOSE | 1 | | | | | | | |
| | Z230902000 | PASAMUROS DETERGENTE | DETERGENT WALL BUSHING | 1 | | | | | | | |
| | Z228812000 | PANEL FRONTAL B SIN PUERTA | FRONT PANEL B WITHOUT DOOR | 1 | | | | | | | |
| | Z218014000 | TAPA LF. COMPLETA EDESA | COMPLETE EDESA LF COVER | 1 | | | | | | | |
| | Z218019000 | ESCUADRA AMARRE JUNTA TAPA | FASTENING BRACKET SEAL COV | 1 | | | | | | | |
| | Z218021000 | PERFIL TAPA LF EDESA | LF EDESA COVER PROFILE | 1 | | | | | | | |
| | Q232020000 | ARANDELA A-4 | WASHER A-4 | 4 | | | | | | | |
| | Q162020000 | TUERCA EXAGONAL M4 | HEXAGONAL NUT M4 | 2 | | | | | | | |
| | Z218007000 | FRENTE EXT. COMP. LF-540-720 | FRONT EXT. COMP. LF-540-720 | 1 | | | | | | | |
| | Z218010000 | BASE EXTRAI. LF-540-720-721 | REMOVABLE BASE LF-540-720-7 | 1 | | | | | | | |
| | Q032031000 | TORNILLO ALOMADO M5X10 | CURVED SCREW M5X10 | 1 | | | | | | | |
| | Z254501000 | EMBELLECED. ADHESIVO VVL 50 | ADHESIVE TRIM VVL 50. | 1 | | | | | | | |
| | R663056000 | BUPIPONS AUTOADHESIVO | BUPIPONS AUTOADHESIVE | 3 | | | | | | | |
| | Q032011000 | TORNILLO ALOMADO M3X10 | CURVED SCREW M3X10 | 4 | | | | | | | |
| | Q161310000 | TUERCA EXAGONAL M3 H.ZINC. | HEXAGONAL NUT M3 ZINC-COAT | 4 | | | | | | | |
| | Z218011000 | PRG. GICAR C.TECLADO | PRG. GICAR C.KEYBOARD | 1 | | | | | | | |
| | Z218013000 | CABLEADO GICAR | WIRING GICAR | 1 | | | | | | | |
| | P623017000 | INTERRUPTOR GENERAL C.I. | C.I. POWER SWITCH | 1 | | | | | | | |
| | R663036000 | FIJACION CIRCUITO | CIRCUIT ATTACHMENT | 3 | | | | | | | |
| | Z468023000 | DISTANCI. INTERRUP. C.I. | SWITCH SPACER C.I. | 1 | | | | | | | |
| | Z218017000 | SOPORTE PILOTOS COMPLETO | COMPLETE PILOT SUPPORT | 1 | | | | | | | |
| | R693055000 | PILOTO VERDE 41227000C7 | GREEN PILOT 41227000C7 | 1 | | | | | | | |
| | Z218012000 | PRG. GICAR C.RELES | PRG. GICAR C.RELAYS | 1 | | | | | | | |
| | T133007000 | DISTANCIADOR M3 | SPACER M3 | 4 | | | | | | | |

| MOD. | LAVAVAJILLAS DE APERTURA FRONTAL<br>FRONT LOADING DISHWASHER | ZONA / ZONE | PIEZAS ESPECIFICAS PARA CULION<br>SPECIFIC PARTS FOR CULION | PLANO<br>DIAGRAM | |
|---|---|---|---|---|---|

| ITEM | CODIGO<br>CODE | DENOMINACION | NAME | VVL 50 | | | | | | | NOTAS |
|---|---|---|---|---|---|---|---|---|---|---|---|
| | T133008000 | TORNILLO AMARRE M3 | ANCHORING SCREW M3 | 4 | | | | | | | |
| | Q161310000 | TUER. EXAGONAL M3 H.ZINCADA | HEXAGONAL NUT M3 ZINC-COAT | 4 | | | | | | | |
| | Z218009000 | SOPORTE COMPONENTES | COMPONENT SUPPORT | 1 | | | | | | | |
| | T302829000 | DISTANCIADOR COMPONENTES | SPACER COMPONENTS | 2 | | | | | | | |
| | Z223005000 | PRESOSTATO SIMPLE P.V.S. | SIMPLE P.V.S. PRESSURE SWITC | 1 | | | | | | | |
| | Z103077000 | RACORD EN Y | Y-CONNECTION | 1 | | | | | | | |
| | Z218002000 | ESCUAD. AMARRE PRESOSTATO | PRESSURE SWITCH FASTENING | 1 | | | | | | | |
| | Z203014000 | TERMOSTATO CALDERIN | WASH DRUM THERMOSTAT | 1 | | | | | | | ELIMINADO 01.11.2012 |
| | 12040858 | TERMOSTATO CALDERIN | WASH DRUM THERMOSTAT | 1 | | | | | | | INTRODUCIDO 01.11.2012 |
| | Z748008000 | SOPORTE BULBO TERMOSTATO | THERMOSTAT BULB SUPPORT | 1 | | | | | | | |
| | P443060000 | TAPON | COVER | 1 | | | | | | | |
| | Z218022000 | INSTALACION ELEC. L.A.F. EDESA | ELEC INSTALLATION L.A.F. EDES | 1 | | | | | | | |
| | Z258002000 | ESQUEMA TEORICO LF 720-B | THEORETICAL DIAGRAM LF 720- | 1 | | | | | | | PLANO HC-17968 |
| | Z218024000 | PLANO MONTAJE LF EDESA | LF EDESA ASSEMBLY PLAN | 1 | | | | | | | PLANO HC-17973 |
| | Z218020000 | FOLLETO INSTRUCCIONES | INSTRUCTION LEAFLET. | 1 | | | | | | | |

# FI-64, FI-72, KM-64, MLV-50 T

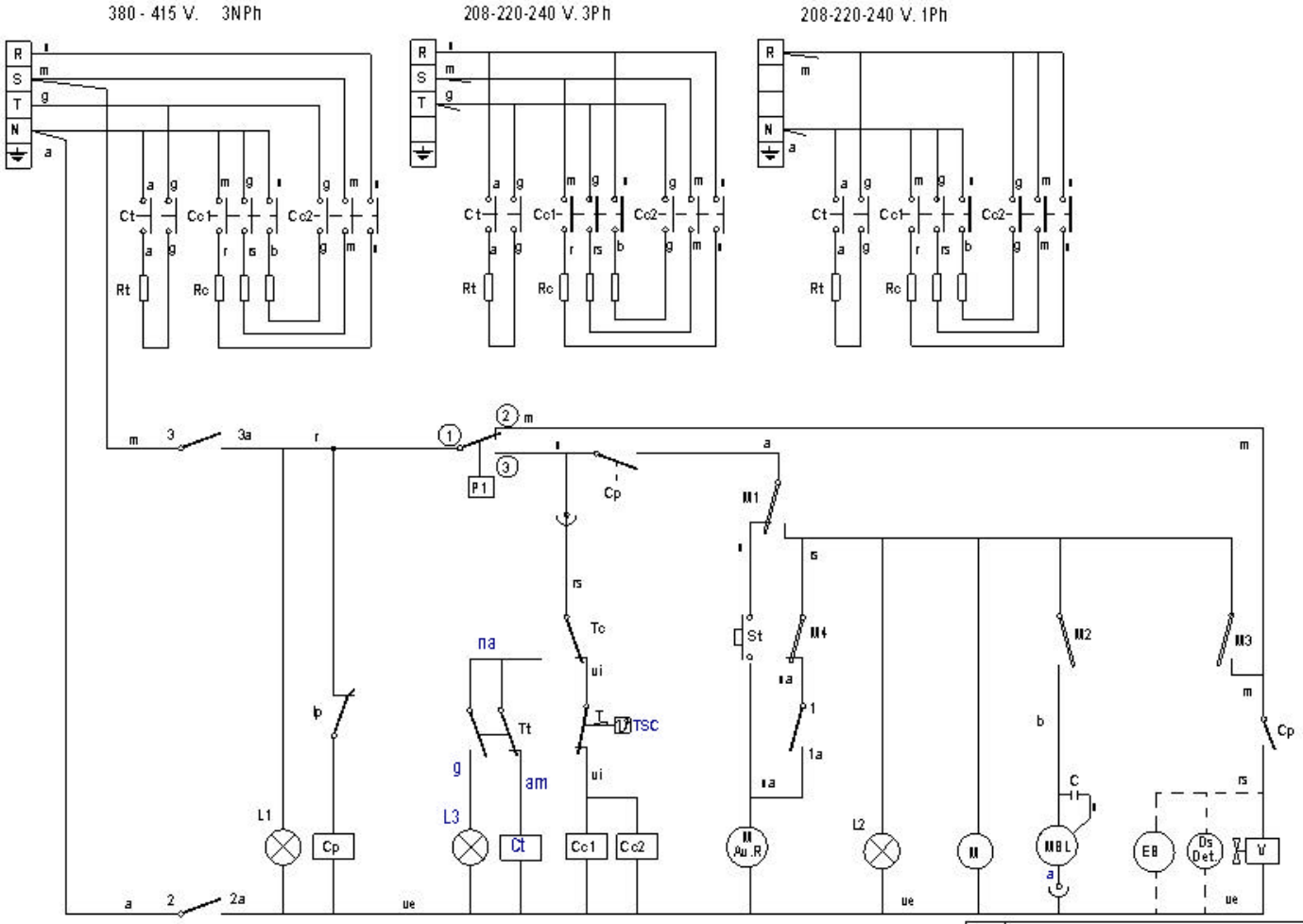


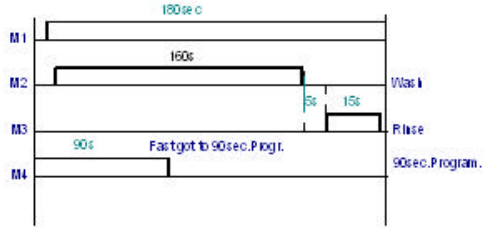


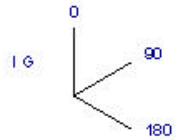


| I G | 1 1a | 2 2a | 3 3a |
|---|---|---|---|
| 0 | | | |
| 120 | x | x | x |
| 180 | | x | x |

Z243049000

| | | | | | |
|---|---|---|---|---|---|
| | Esquema Teorico FI-64, FI-72 | | Z243049000 | | |
| Nº | Pieza | Material | NºClasificacion | Acabado | |
| Nº | Modificacion | Propuesta de | Fecha | Tolerancias generales | |
| 1 | MLV-50 T BERTSIOA SARTU | ribenito | 2007-05-02 | <5± 5-25± 25-50± | 50-100± >100± <0± |

| | Firma | Fecha |
|---|---|---|
| Dibujado | M.Mallo | 07-10-2005 |
| Proyectado | M.Mallo | 07-10-2005 |
| Comprobado | ENERITZ | 07-10-2005 |
| Escala | | |

FAGOR

Fagor Industrial, Koop.Ek., Mugatua

Mecanizado superficial

LAVAVAJILLAS

Plano numero HC-17891-1

Sustituye al Nº

Sustituido por

# FI-64 B,MLV-50 TB

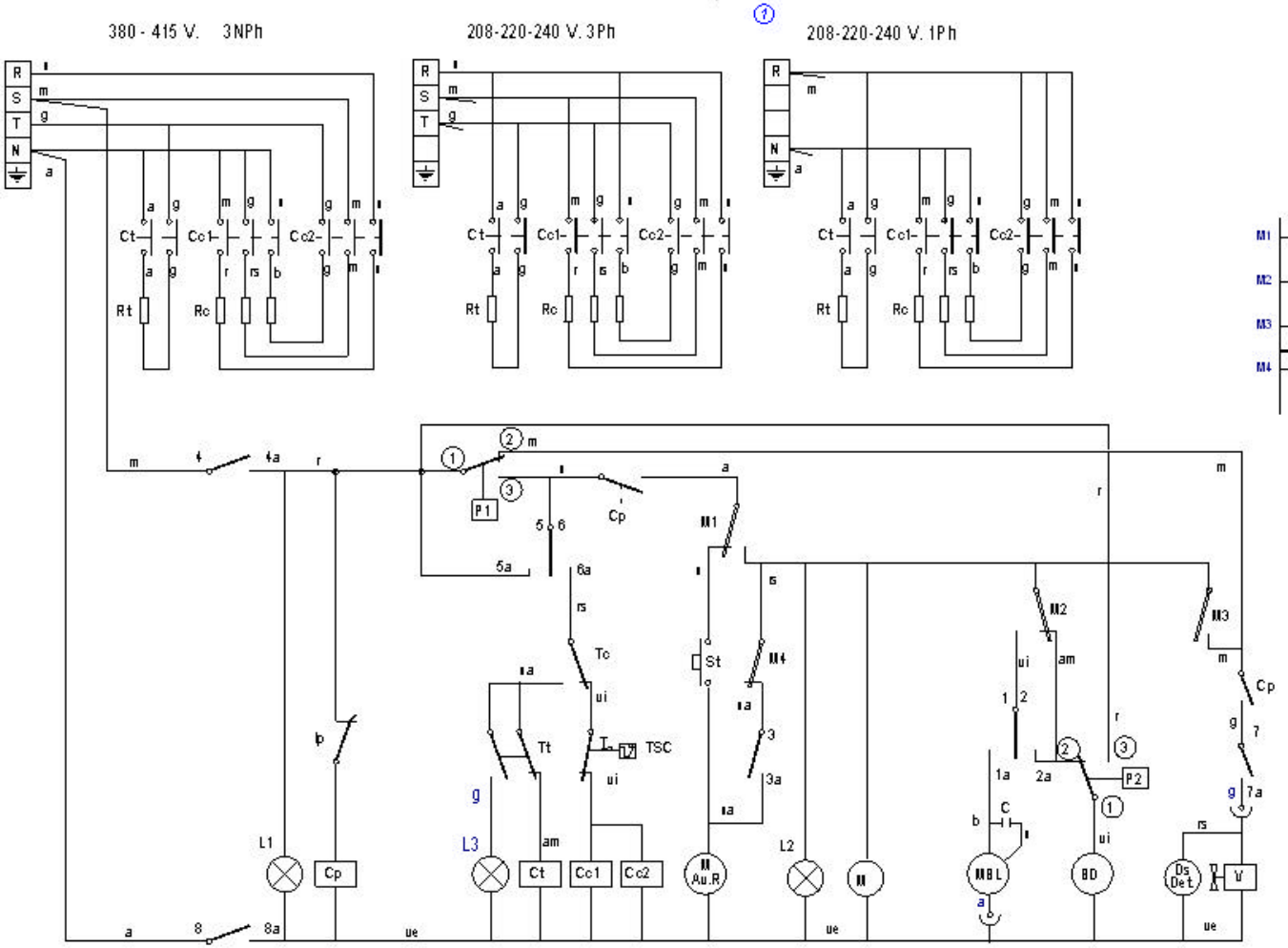


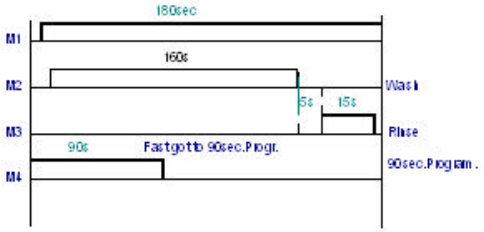


| I G | 1 — 2 1a | 2a | 3 3a | 4 4a — 5 5a | 6 6a | 7 7a | 8 8a |
|---|---|---|---|---|---|---|---|
| | | x | | x | x | | x |
| 0 | | | | | | | |
| 90 | x | | x | x | | x | x | x |
| 180 | x | | | x | | x | x | x |

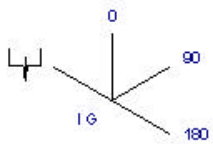


Z253047000

| | | | | | |
|---|---|---|---|---|---|
| | Esquema Teorico FI-64B | | Z253047000 | | |
| Nº | Pieza | Material | NºClasificacion | Acabado | |
| Nº | Modificacion | Propuesta de | Fecha | Tolerancias generales | |
| 1 | MLV-50 TB BERTSIOA SARTU | Ibenito | 2007-05-02 | <5± | 50-100± : |
| | | | | 5-25± : | >100± |
| | | | | 25-50± : | <x± |

| | Firma | Fecha |
|---|---|---|
| Dibujado | M.Mallo | 07-10-2005 |
| Proyectado | M.Mallo | 07-10-2005 |
| Comprobado | ENERITZ | 07-10-2005 |
| Escala | | |

FAGOR

Fagor Industrial,Koop.Ek., Mugatua

Mecanizado superficial

LAVAVAJILLAS

Plano numero HC-17893-1

Sustituye al Nº

Sustituido por

# FI-64 D, MLV-50 TD

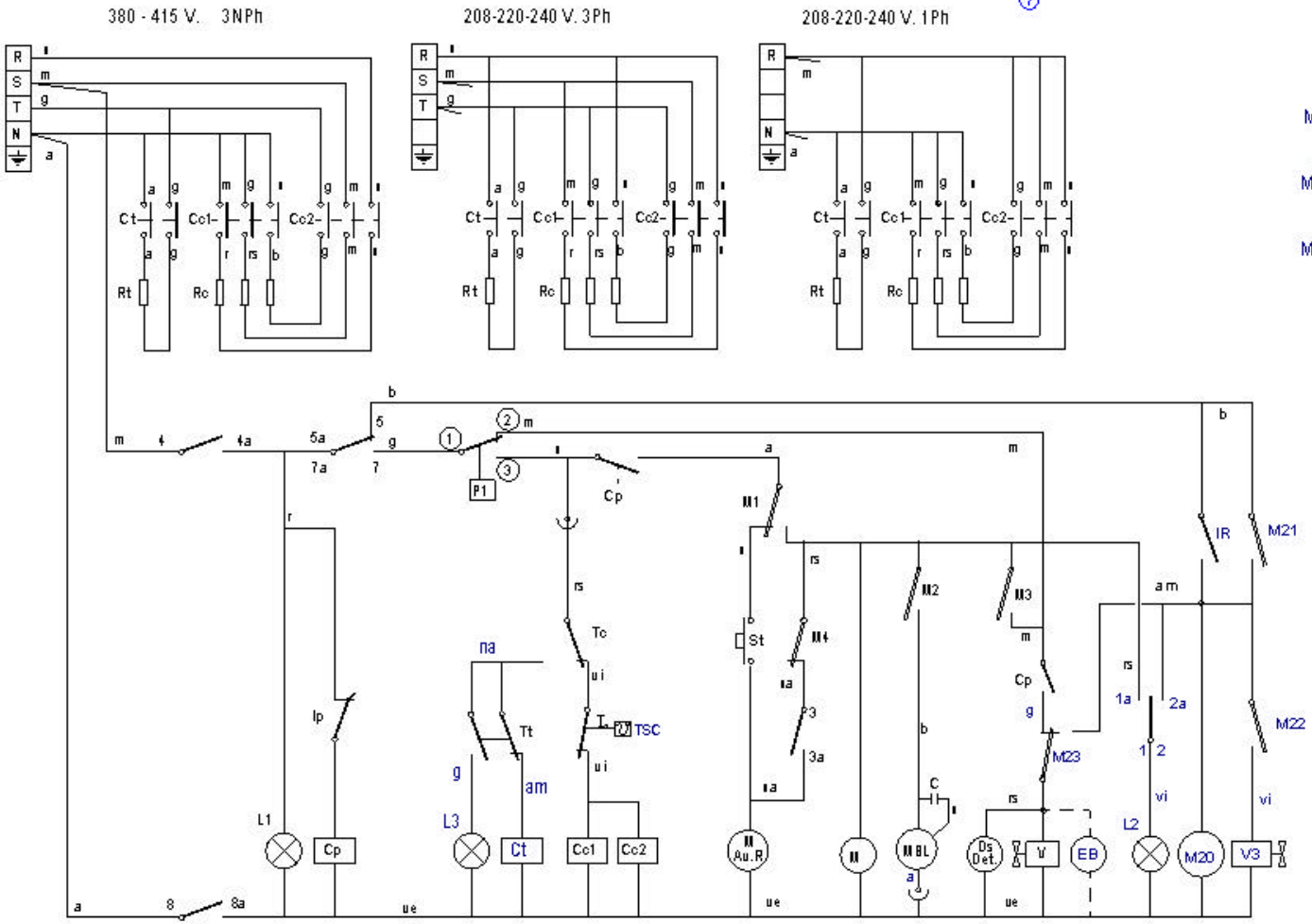


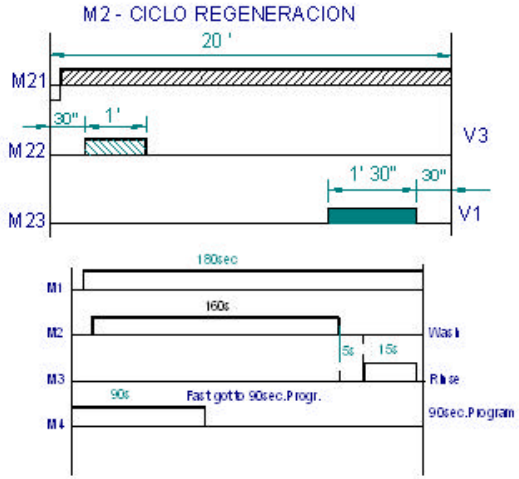


| IG | 1 — 1a | 2 2a | 3 3a | 4 4a | 5 — 5a | | 7 7a | 8 8a |
|---|---|---|---|---|---|---|---|---|
| R | | X | | X | X | | | X |
| 0 | | | | | | | | |
| 120 | X | | X | X | | X | X | X |
| 180 | X | | | X | | X | X | X |

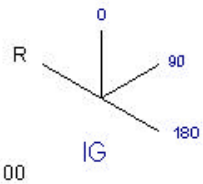


Z247803000

| | | | | | |
|---|---|---|---|---|---|
| - | ESQUEMA TEORICO FI-64 D | - | | Z247803000 | |
| Zk./Nº | Pieza | Cant. | Materiala/Material | Klas. zk/Nº Clas. | Gainazal akabera/Tratamiento |
| Zk./Nº | Aldaketa/Modificaciones | | Nork proposatua/Propuesta de | Data/Fecha | Perdolorokorrak Tolerancias generales |
| 1 | MLV-50 TD BERTSIOA SARTU | | rberrito | 2007-05-02 | |
| - | - | | - | - | < 5 ± 0.2 / 50 ÷ 100 ± 0.8 |
| - | - | | - | - | 5 ÷ 25 ± 0.4 / >100± 1 |
| - | - | | - | - | 25 ÷ 50 ± 0.6 / α ± 1° |
| - | - | | - | - | |

| | Sinadura/Firma | Data/Fecha |
|---|---|---|
| Marraztua/Dibujado | m gangoiti | 2006-05-02 |
| Proiektatua/Proyectado | m gangoiti | 2006-05-02 |
| Egiaztatua/Comprobado | [signature] | 2006-05-17 |

FAGOR

Fagor Industrial,Koop.Elk, Mugatua

Gainazal perdola
Mecanizado superficial
—

Eskala/Escala

1:1

**ONTZI GARBIGAILUAK**

Plano Zk./Plano Nº
HC-17979 -1

- Zk. ord. du
- Zk.gaitik ord.

Plano hau ez indaiteke erabili, ez berriztatu, gure baimenik gabe.

# FI-64 CLINIC, FI-64B B-T

380 - 415 V. 3NPh

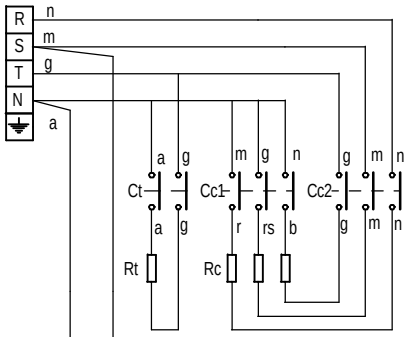


208-220-240 V. 3Ph

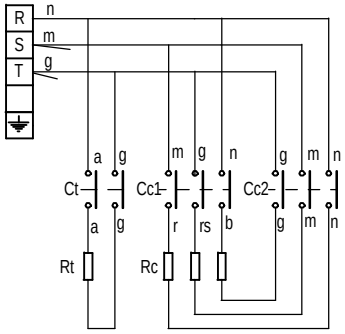


208-220-240 V. 1Ph

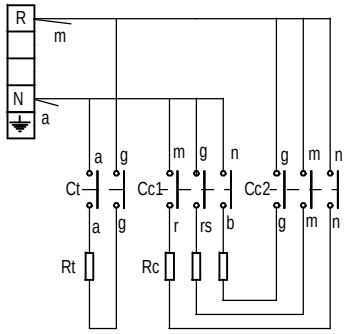


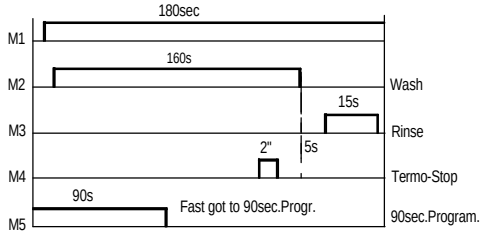


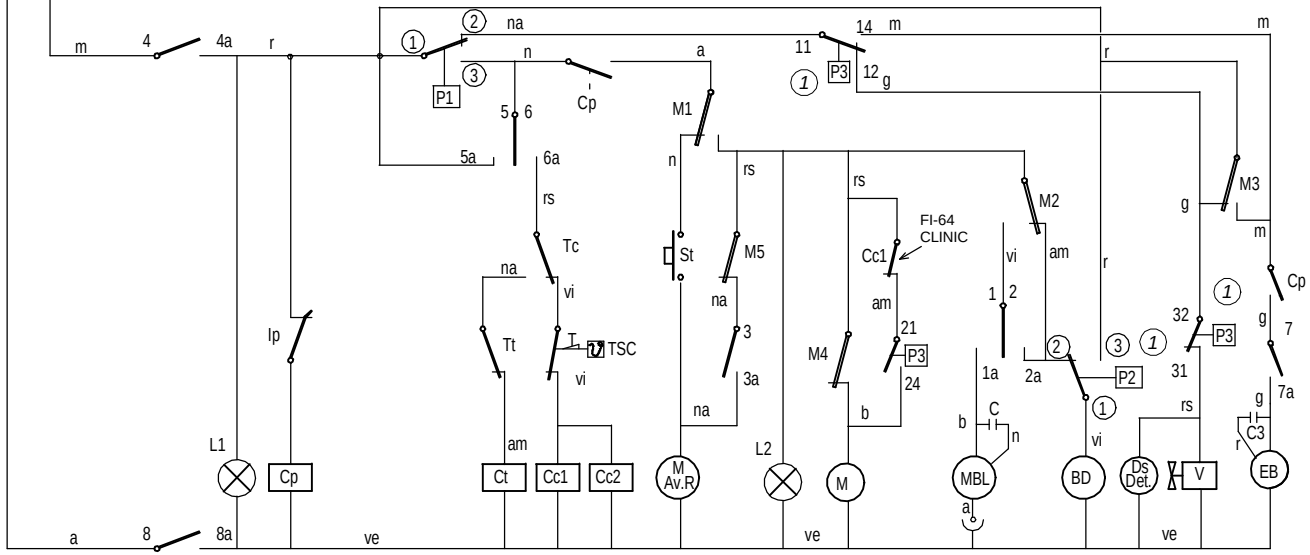


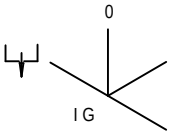


| I G | 1 — 2<br>1a 2a | 3<br>3a | 4<br>4a | 5 — 6<br>5a 6a | 7<br>7a | 8<br>8a |
|---|---|---|---|---|---|---|
| ⌊⌋ | | X | X | X | | X |
| 0 | | | | | | |
| 90 | X | | X | X | X | X |
| 180 | X | | | X | X | X |

Z257414000

| | | | | | |
|---|---|---|---|---|---|
| | Esquema Teorico FI-64 CLINIC | | Z257414000 | | |
| Nº | Pieza | Material | Nº Clasificacion | Acabado | |
| Nº | Modificacion | Propuesta de | Fecha | Tolerancias generales | |
| 1 | Se sustituyen P3, P4 y P5 por el triple presostato P3 | Malbes | 22-06-2007 | | |

| | Firma | Fecha |
|---|---|---|
| Dibujado | M.Maillo | 07-10-2005 |
| Proyectado | M.Maillo | 07-10-2005 |
| Comprobado | ENERITZ | 07-10-2005 |
| Escala | | |

FAGOR

Fagor Industrial,Koop.Elk, Mugatua

Mecanizado superficial

LAVAVAJILLAS

Plano numero
HC-17888-01

Sustituye al Nº

Sustituido por

Plano hau ez daiteke erabili ez berrizta gure baimenitz gabe

# FI-64 W

380 - 415 V. 3NPh

208-220-240 V. 3Ph

208-220-240 V. 1Ph

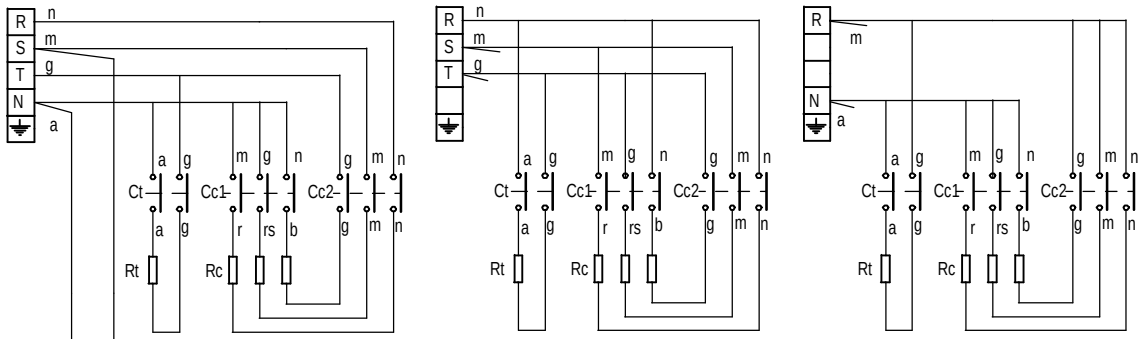


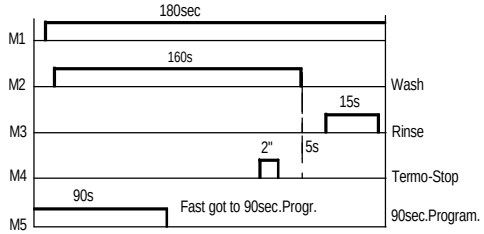


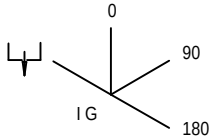


| I G | 1 — 2<br>1a — 2a | 3<br>3a | 4<br>4a — 5a | 5 — 6<br>6a | 7<br>7a | 8<br>8a |
|---|---|---|---|---|---|---|
| ⏚ | X | | X | X | | X |
| 0 | | | | | | |
| 90 | X | X | X | | X | X |
| 180 | X | | X | | X | X |

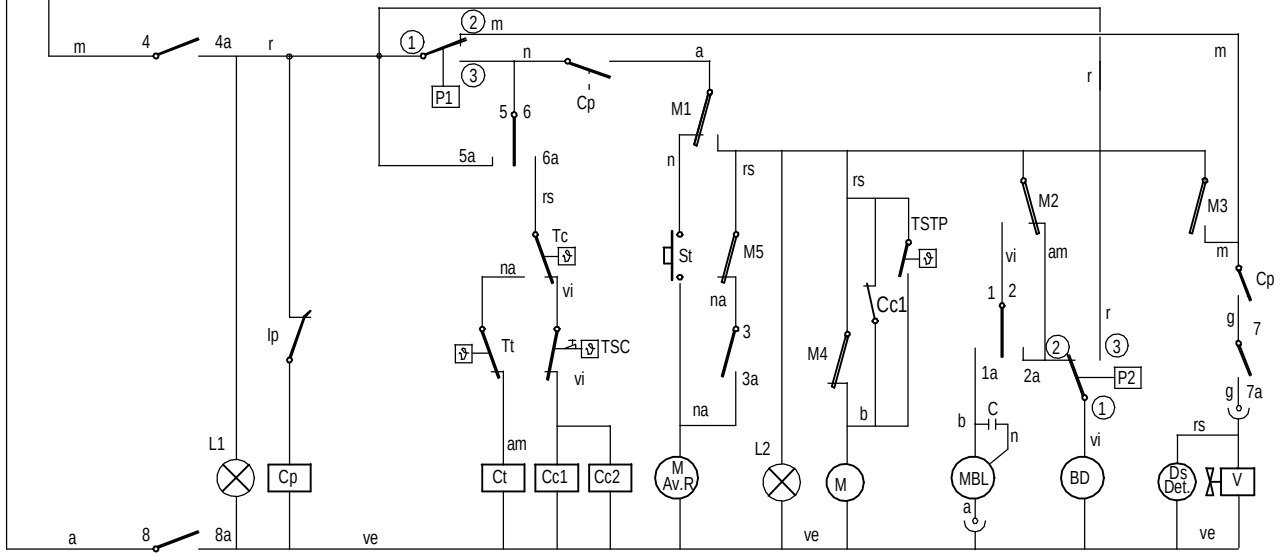


Colours code-Code de couleurs-Codigo de colores:

r = red-rouge-rojo
m = brown-marron-marron
g = grey-gris-gris
n = black-noir-negro
a = blue-bleu-azul
b = white-blanc-blanco
vi = violette-violet-violeta
am = yellow-jaune-amarillo
na = orange-orange-naranja
rs = rose-pink-rosa
ve = green-vert-verde
am/ve = yellow green-jaune vert-amar./verde

Z-258439000 HC-17993

| | | | |
|---|---|---|---|
| BD | Drain pump | Pompe de vidange | Bomba desagüe |
| C 1/2/3 | Condenser | Condensateur | Condensador |
| CMB | Wash pump contactor | Contacteur pompe lavage | Contactor bomba lavado |
| Cc 1/2 | Boiler heating contactor | Contacteur chauf. surchauffeur | Contactor calentamiento calderin |
| Ct | Tank heating contactor | Contacteur chaufage cuve | Contactor calentamiento tanque |
| CP | Door relay | Relais porte | Rele puerta |
| Ds.Det. | Detergent doser | Dosseur de detergent | Dosificador detergente |
| E.B | Electric pressure pump | Electropompe de pression | Electrobomba de presion |
| IG | Main switch | Interrupteur general | Interruptor general |
| IP | Door microswitch | Micro porte | Micro puerta |
| L1 | Operation light | Voyant funcionement | Piloto de encendido |
| L2 | Start light | Voyant demarrage | Piloto marcha |
| L3 | Light machine ready | Voyant machine prêt | Piloto maquina preparada |
| MBL | Wash pump | Pompe lavage | Bomba lavado |
| M | Motor programmer | Moteur du programmateur | Motor programador |

| | | | |
|---|---|---|---|
| M Av. R | Motor program. rapid advance | Moteur du progr.avance rapide | Motor program. avance rapido |
| M1 | Micro programmer on | Micro du programm. de marche | Micro programador marcha |
| M2 | Micro programmer wash | Micro du programm. de lavage | Micro programador lavado |
| M3 | Micro programmer on | Micro du programm. de rinçage | Micro programador aclarado |
| M4 | Micro programmer Termo-stop | Micro du programm. Termo-stop | Micro programador Termo-stop |
| M5 | Micro programmer advance | Micro du programm. avance | Micro programador avance |
| P, P1, P5 | Pressure switch | Pressostat | Presostato |
| P2, P3, P4 | Hi-limit pressure switch | Pressostat de securité | Presostato limitador |
| RC | Boiler heating element | Resistance surchauffeur | Resistencia calderin |
| RT | Tank heater | Resistance cuve | Resistencia tanque |
| Tt | Tank thermostat | Thermostat de cuve | Termostato tanque |
| TC | Boiler thermostat | Thermostat surchauffeur | Termostato calderin |
| TSC | Boiler Hi-limit | Limiteur surchauffeur | Limitador calderin |
| TSTP | Termo-stop Thermostat | Thermostat Termo-stop | Termostato termo-stop |
| V | Fill and rinse valve | Electrovan. remplissage rinçage | Electrovalvula llenado y aclarado |

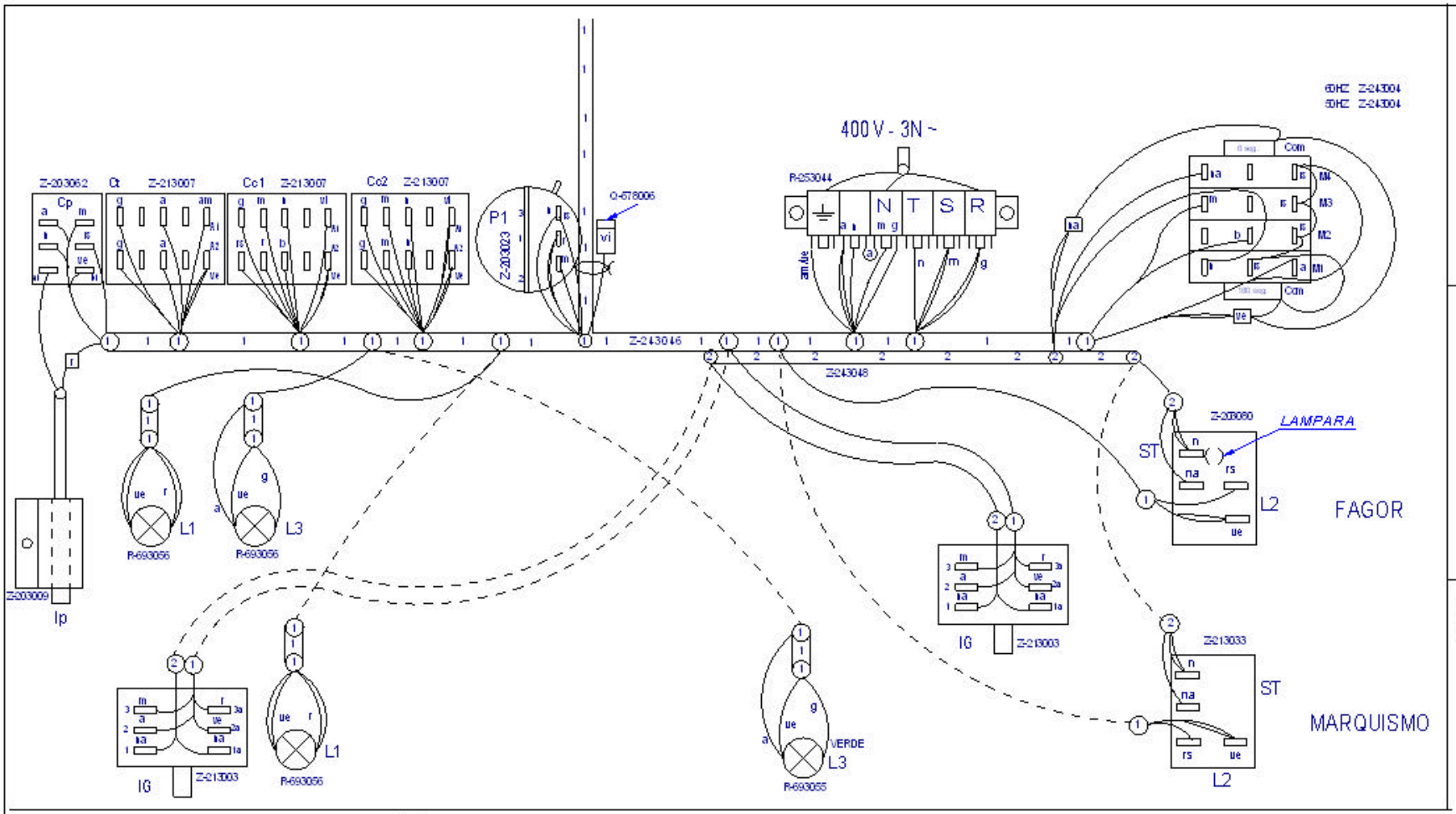


ESQUEMA TEORICO Z-243049
LEYENDA Z-243051
INDICADOR DE COMPONENTES Z-713034

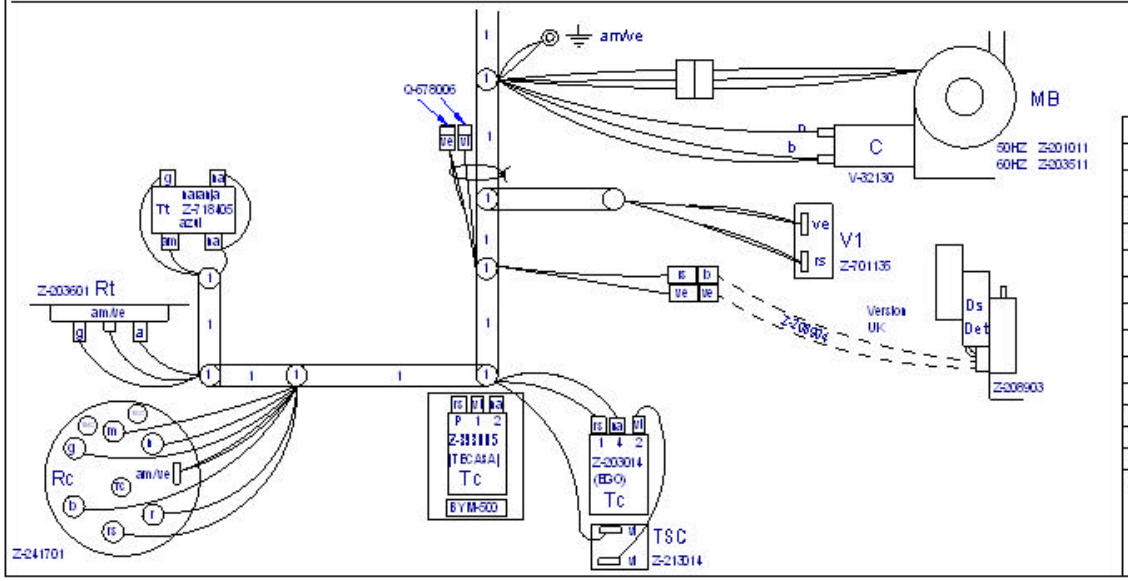


| | | | | | |
|---|---|---|---|---|---|
| | Plano montaje FI-64 | | Z203050000 | | |
| Nº | Pieza | Material | NºClasificacion | Acabado | |
| Nº | Modificacion | Propuesta de | Fecha | Tolerancias generales | |
| 1 | Correccion en nueva estetica Fagor | scaro | 2006-11-30 | <5± / 5-25± / 25-50± | 50-100± / >100± / ∞± |

| | Firma | Fecha |
|---|---|---|
| Dibujado | M.Mallo | 07-10-2005 |
| Proyectado | M.Mallo | 07-10-2005 |
| Comprobado | ENERTIZ | 07-10-2005 |
| Escala | | |

FAGOR
Fagor Industrial,Koop.Ek., Mugatua

Mecanizado superficial

LAVAVAJILLAS

Plano numero
HC-17896 -1

Sustituye al Nº

Sustituido por

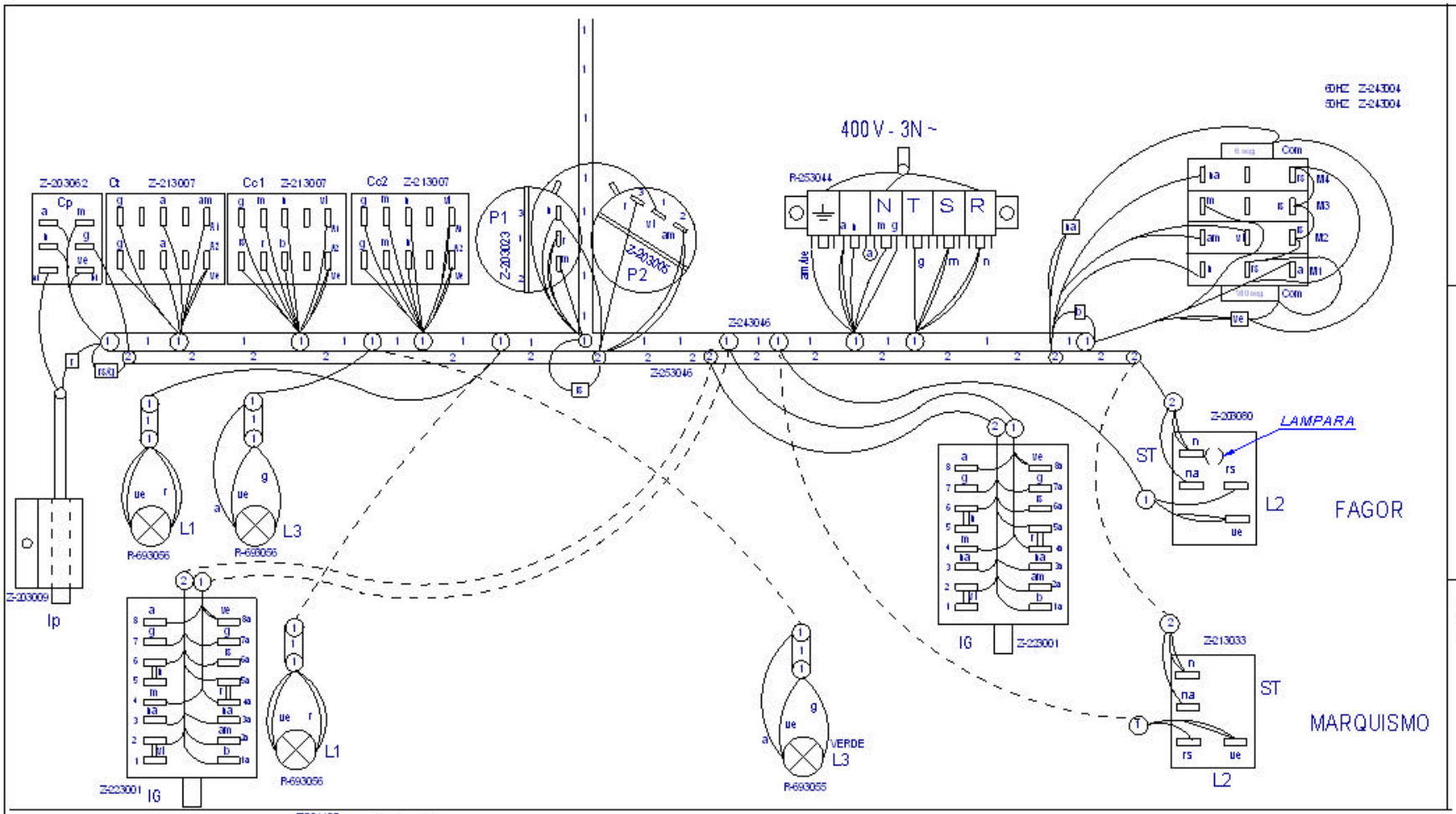


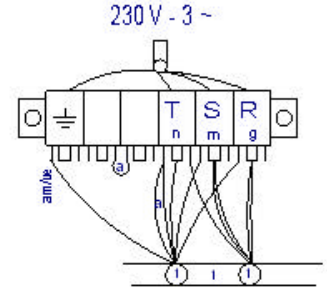


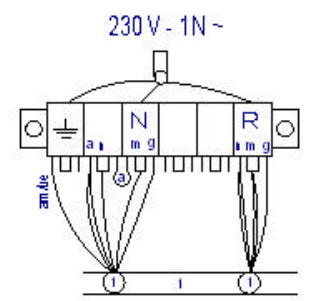


| | |
|---|---|
| ESQUEMA TEORICO | Z-253047 |
| LEYENDA | Z-243051 |
| INDICADOR DE COMPONENTES | Z-713034 |

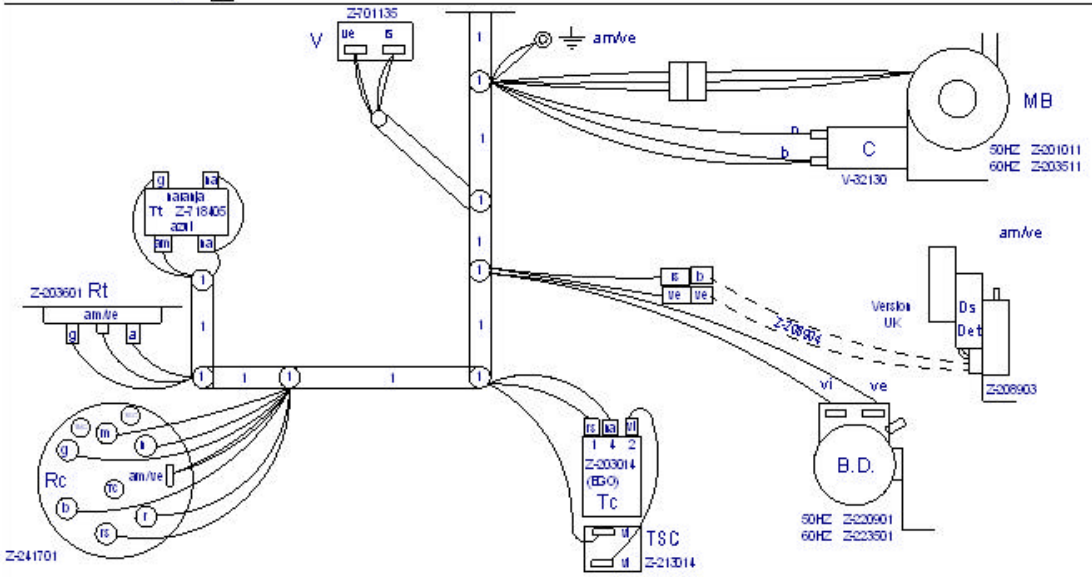


| | | | | | |
|---|---|---|---|---|---|
| | Plano Montaje FI-64 B | | Z253048000 | | |
| Nº | Pieza | Material | Nº Clasificador | Acabado | |
| Nº | Modificación | Propiedad de | Fecha | Tolerancias generales | |
| 1 | Correccion en nueva estetica Fagor | scaro | 2006-11-30 | | |

| | Firma | Fecha |
|---|---|---|
| Dibujado | M.Mallb | 07-10-2005 |
| Proyectado | M.Mallo | 07-10-2005 |
| Comprobado | | 07-10-2005 |
| Escala | | |

FAGOR

Fagor Industrial, Coop. Ek., Mogatxa

Mecanizado superficial

LAVAVAJILLAS

Plano número HC-17898 -1

Sustituye a Nº

Sustituido por

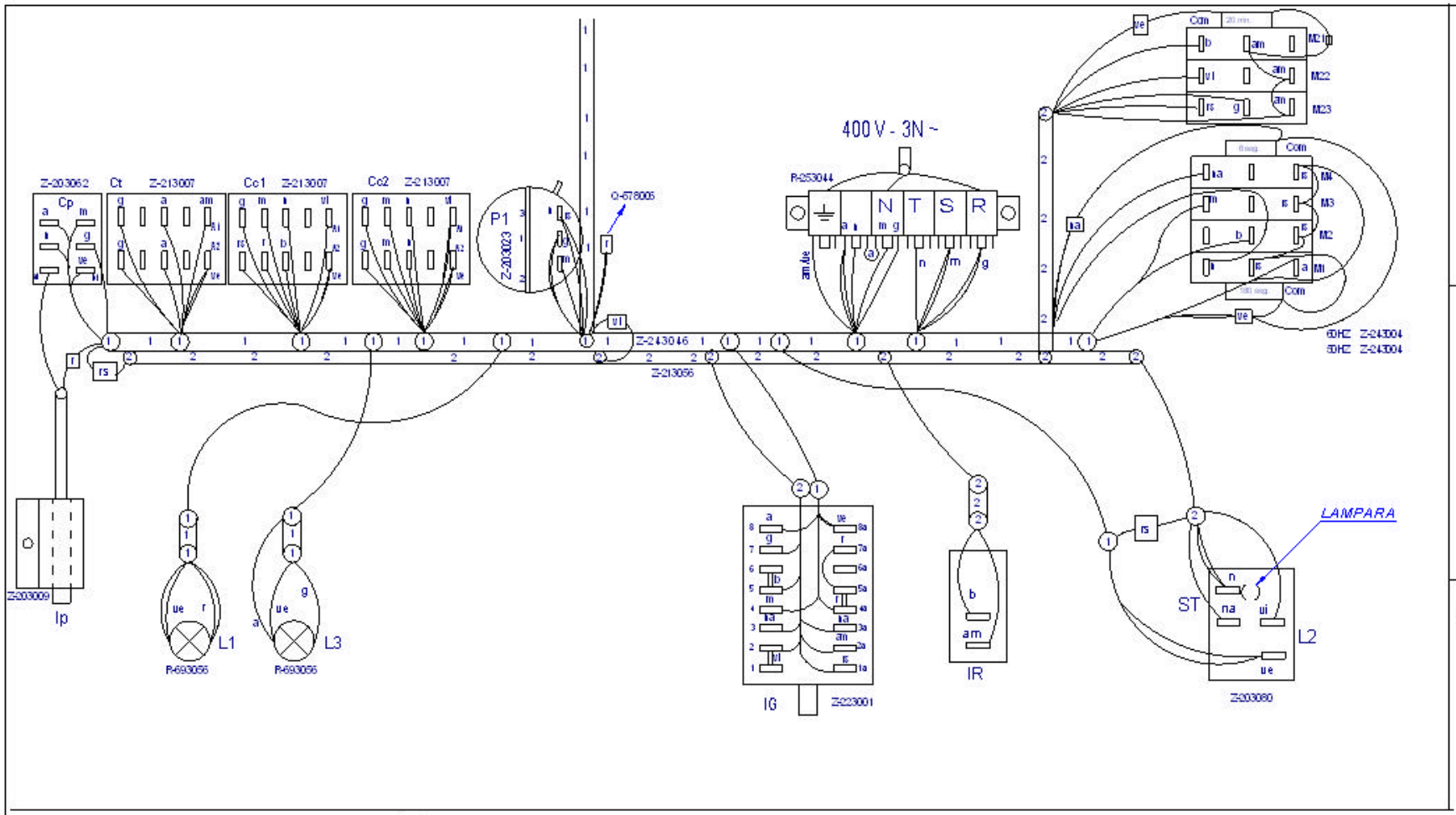


ESQUEMA TEORICO Z-247803
LEYENDA Z-243051
INDICADOR DE COMPONENTES Z-713034

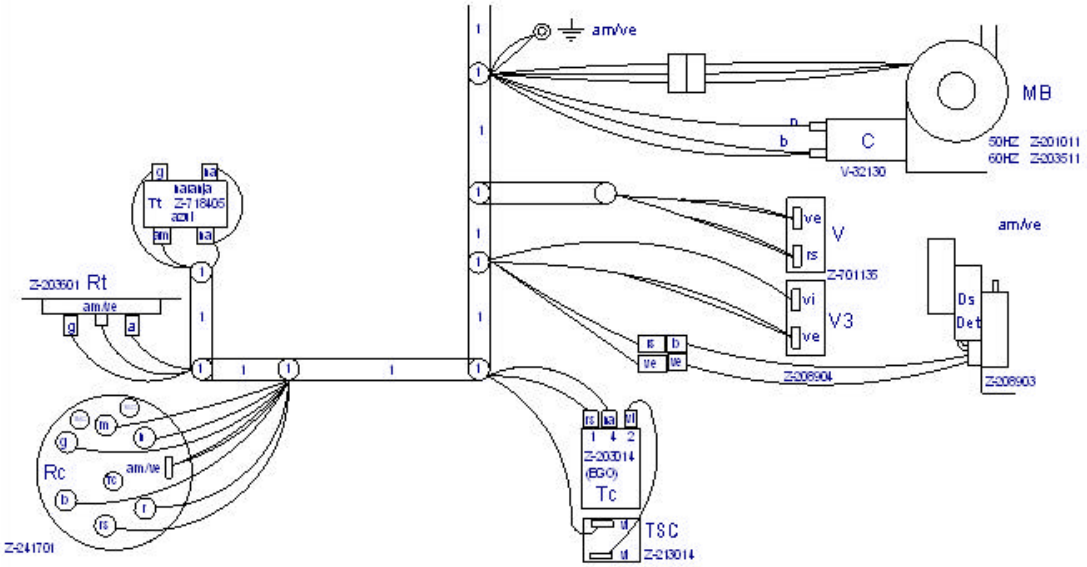


| | | | | | |
|---|---|---|---|---|---|
| - | PLANO MONTAJE FI-64 D | - | | Z247804000 | |
| Zk./Nº | Pieza | Cant. | Materiala/Material | Klas. zk/Nº Clas. | Galnazal akabera/Tratamiento |
| Zk./Nº | Aldaketa/Modificaciones | | Nork proposatua/Propuesta de | Data/Fecha | Perdolorokorrak Tolerancias generales |
| 1 | Correccion en nueva estetica Fagor | | scaro | 2006-11-30 | |
| - | - | | - | - | < 5 ± 0.2 / 50 ÷ 100 ± 0.8 |
| - | - | | - | - | 5 ÷ 25 ± 0.4 / >100± 1 |
| - | - | | - | - | 25 ÷ 50 ± 0.6 / α ± 1° |
| - | - | | - | - | |

| | Sinadura/Firma | Data/Fecha |
|---|---|---|
| Marraztua/Dibujado | m gangoiti | 2006-05-02 |
| Proiektatua/Proyectado | m gangoiti | 2006-05-02 |
| Eglaztatua/Comprobado | [signature] | 2006-05-17 |

FAGOR

Fagor Industrial,Koop.Elk, Mugatua

Galnazal perdola Mecanizado superficial

—

Eskala/Escala

# ONTZI GARBIGAILUAK

Plano Zk./Plano Nº HC-17978 -1

- Zk. ord. du

Plano hau ezin daiteke erabili, ez berriztatu, gure baimenik gabe.

- Zk.galtik ord.

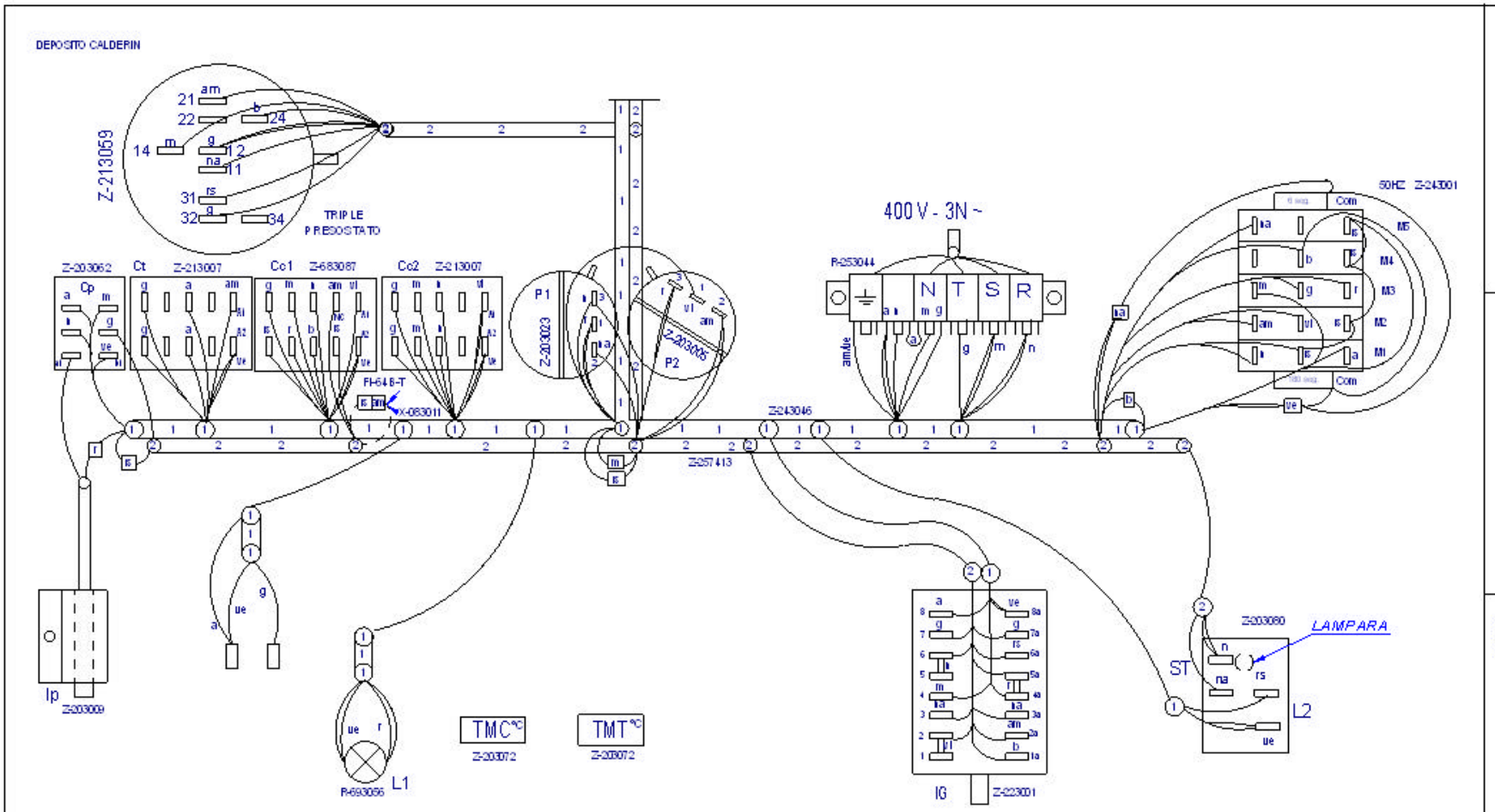


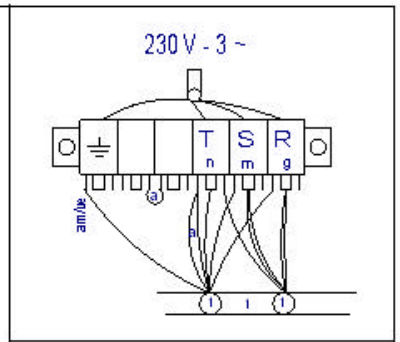


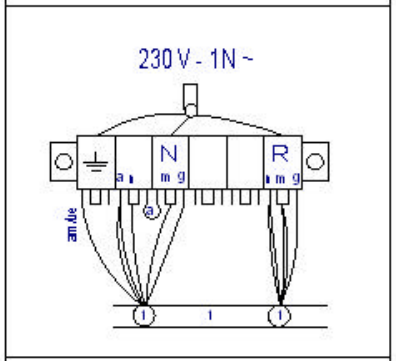


| | |
|---|---|
| ESQUEMA TEORICO | Z-257414 |
| LEYENDA | Z-243051 |
| INDICADOR DE COMPONENTES | Z-713034 |

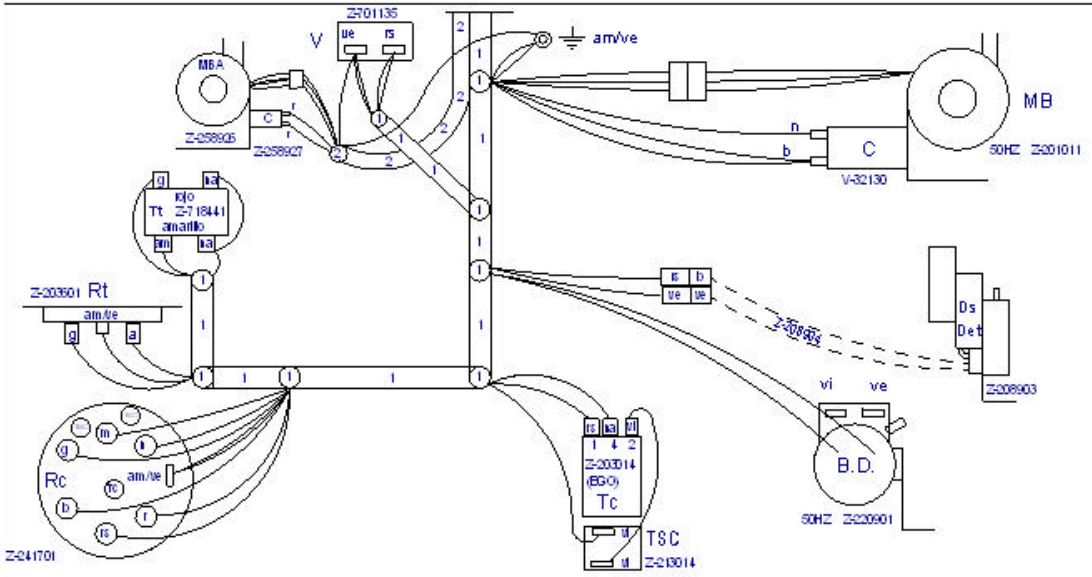


| | | | | | |
|---|---|---|---|---|---|
| | Plano Montaje FI-64 CLINIC, FI-64 B-T | | Z257412000 | | |
| Nº | Pieza | Material | Nº Clasificación | Acabado | |
| Nº | Modificación | Propuesta de | Fecha | Tolerancias generales | |
| 1 | Correccion en nueva estetica Fagor | scaro | 2006-11-30 | <5± / 5-25± / 25-50± | 50-100± / >100± / ◇± |

| | Firma | Fecha |
|---|---|---|
| Dibujado | M.Mallo | 07-10-2005 |
| Proyectado | M.Mallo | 07-10-2005 |
| Comprobado | ENERITZ | 07-10-2005 |
| Escala | | |

FAGOR

Fagor Industrial, Koop.Ek., Mugatua

Mecanizado superficial

LAVAVAJILLAS

Plano numero HC-17889 -1

Sustituye al Nº

Sustituido por

# FI-64W

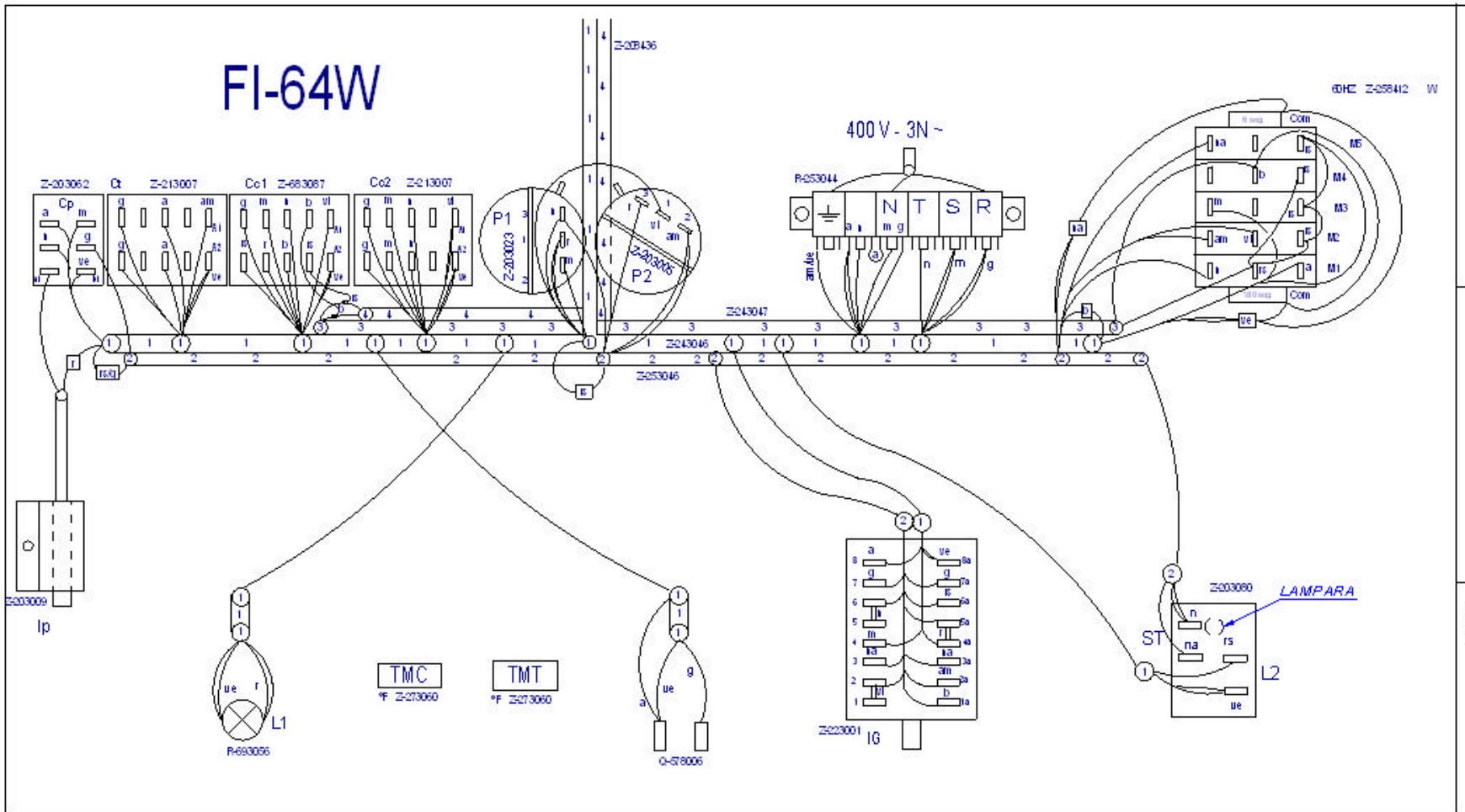


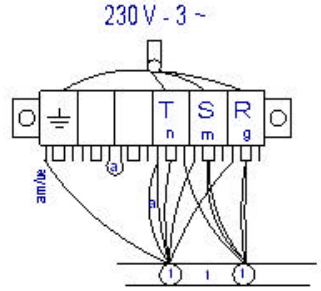


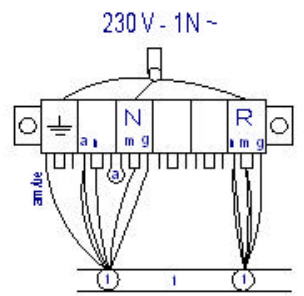


| | |
|---|---|
| ESQUEMA TEORICO | Z-258439 |
| LEYENDA | Z-243051 |
| INDICADOR DE COMPONENTES | Z-713034 |

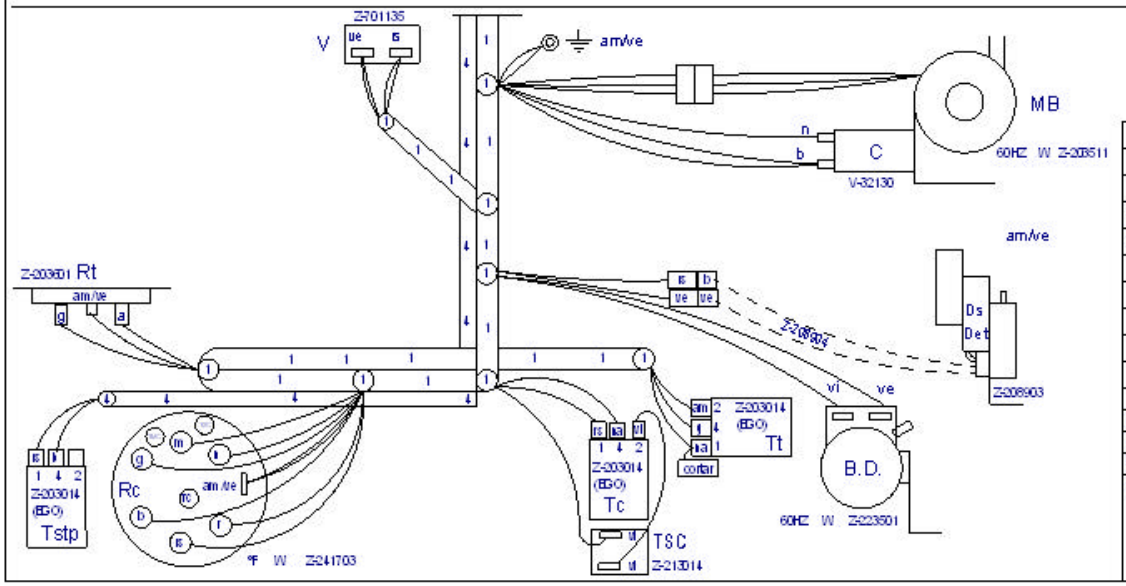


Z258438000

| | | | | | |
|---|---|---|---|---|---|
| | Plano Montaje FI-64 W | | Z258438000 | | |
| Nº | Pieza | Material | NºClasificación | Acabado | |
| Nº | Modificación | Propiestade | Fecha | Tolerancias generales | |
| 1 | Introducir nueva estetica Fagor | scaro | 2006-11-30 | | |

| | Firma | Fecha |
|---|---|---|
| Dibujado | M.Mallb | 07-10-2006 |
| Proyectado | M.Mallo | 07-10-2006 |
| Comprobado | ENERTIT | 07-10-2006 |
| Escala | | |

FAGOR

Fagor Industrial, Coop. Ek., Mugarra

Mecanizado superficial

LAVAVAJILLAS

Plano número HC-17991 -1

Sustituye a Nº

Sustituido por

# LEYENDA APERTURA FRONTAL

| | ESPAÑOL | FRANÇAIS | ENGLISH | DEUTSCH | ITALIANO |
|---|---|---|---|---|---|
| BD | Bomba desagüe | Pompe de vidange | Drain pump | Abflußpumpe | Pompa scarico |
| C 1/2/3 | Condensador | Condensateur | Condenser | Kondensator | Condensatore |
| CMB | Contactor bomba lavado | Contacteur pompe lavage | Wash pump contactor | Kontaktschütz Waschpumpe | Contattore pompa lavaggio |
| Cc 1/2 | Contactor calentamiento calderin | Contacteur chauf. surchauffeur | Boiler heating contactor | Kontaktschütz Boilerheizung | Contattore riscaldamento boiler |
| Ct | Contactor calentamiento tanque | Contacteur chaufage cuve | Tank heating contactor | Kontaktschütz Heizung Tank | Contattore riscaldamento serbatoio |
| CP | Rele puerta | Relais porte | Door relay | Türrelais | Rele porta |
| Ds.Det. | Dosificador detergente | Dosseur de detergent | Detergent doser | Dosierer Spülmittel | Dosatore detersivo |
| E.B | Electrobomba de presion | Electropompe de pression | Electric pressure pump | Elektro-Drucksteigungspumpe | Electropompa pressione |
| IG | Interruptor general | Interrupteur general | Main switch | Hauptschalter | Interruttore generale |
| IP | Micro puerta | Micro porte | Door microswitch | Mikroschalter Tür | Micro porta |
| L1 | Piloto de encendido | Voyant funcionement | Operation light | Betriebsanzeigelampe | Spia accensione |
| L2 | Piloto marcha | Voyant demarrage | Start light | Startanzeigelampe | Spia avvio |
| L3 | Piloto maquina preparada | Voyant machine prêt | Light machine ready | Betriebsbereitschaftsanzeigelampe | Pilota macchina preparata |
| MBL | Bomba lavado | Pompe lavage | Wash pump | Waschpumpe | Pompa lavaggio |
| M | Motor programador | Moteur du programmateur | Motor programmer | Motor Programmiervorrichtung | Motore programmatore |
| M Av. R | Motor program. avance rapido | Moteur du progr.avance rapide | Motor program. rapid advance | Motor Programmiervorrich. schneller Vorlauf | Motore programmatore avanzamento rapido |
| M1 | Micro programador marcha | Micro du programm. de marche | Micro programmer on | Motor Programmiervorrich. Betrieb | Micro programma. di funzionamento |
| M2 | Micro programador lavado | Micro du programm. de lavage | Micro programmer wash | Motor Programmiervorrich. Waschen | Micro programmatore di lavaggio |
| M3 | Micro programador aclarado | Micro du programm. de rinçage | Micro programmer on | Motor Programmiervorrich. Spülen | Micro programmatore di risciacquo |
| M4 | Micro programador Termo-stop | Micro du programm. Termo-stop | Micro programmer Termo-stop | Motor Programmiervorrich. Thermo-Stop | Micro programmatore Termo-stop |
| M5 | Micro programador avance | Micro du programm. avance | Micro programmer advance | Motor Programmiervorrich. Vorlauf | Micro programmatore avanzamento |
| P, P1, P5 | Presostato | Pressostat | Pressure switch | Druckwächter | Pressostato |
| P2, P3, P4 | Presostato limitador | Pressostat de securité | Hi-limit pressure switch | Begrenzer Druckwächter | Pressostato limitatore |
| RC | Resistencia calderin | Resistance surchauffeur | Boiler heating element | Heizwiderstand Boiler | Resistenza boiler |
| RT | Resistencia tanque | Resistance cuve | Tank heater | Heizwiderstand Tank | Resistenza serbatoio |
| Tt | Termostato tanque | Thermostat de cuve | Tank thermostat | Thermostat Tank | Termostato serbatoio |
| TC | Termostato calderin | Thermostat surchauffeur | Boiler thermostat | Thermostat kessel | Termostato boiler |
| TSC | Limitador calderin | Limiteur surchauffeur | Boiler Hi-limit | Begrenzer Boiler | Limitatore boiler |
| TSTP | Termostato termo-stop | Thermostat Termo-stop | Termo-stop Thermostat | Thermostat Termo-stop | Termostato Termo-stop |
| V | Electrovalvula llenado y aclarado | Electrovan. remplissage rinçage | Fill and rinse valve | Elektroventil Füllen und Spülen | Elettroval. riempimento e risciacquo |
| COLOR | COLORES | COULEURS | COLOUR | FARBEN | COLORE |
| a = | Azul | Bleu | Blue | Blau | Blu |
| am = | Amarillo | Jaune | Yellow | Gelb | Giallo |
| am/ve = | Amarillo/verde | Jaune / vert | Yellow / green | Gelb/grün | Giallo/verde |
| b = | Blanco | Blanc | White | Weiß | Bianco |
| g = | Gris | Gris | Grey | Grau | Grigio |
| m = | Marrón | Marron | Brown | Braun | Marrone |
| n = | Negro | Noir | Black | Schwarz | Nero |
| na = | Naranja | Orange | Orange | Orange | Arancio |
| r = | Rojo | Rouge | Red | Rot | Rosso |
| rs = | Rosa | Rose | Pink | Rosa | Roseo |
| ve = | Verde | Vert | Green | Grün | Verde |
| vi = | Violeta | Violet | Purple | Violett | Viola |

Z243051000