SAGI - BASI REFRIGERATE
JBM - 12-05-2005 »

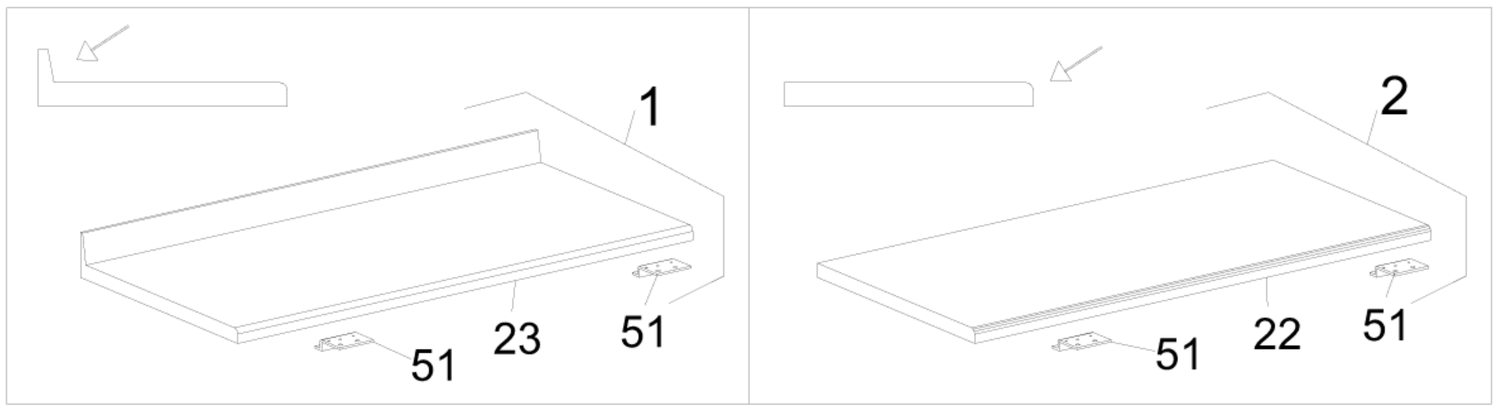


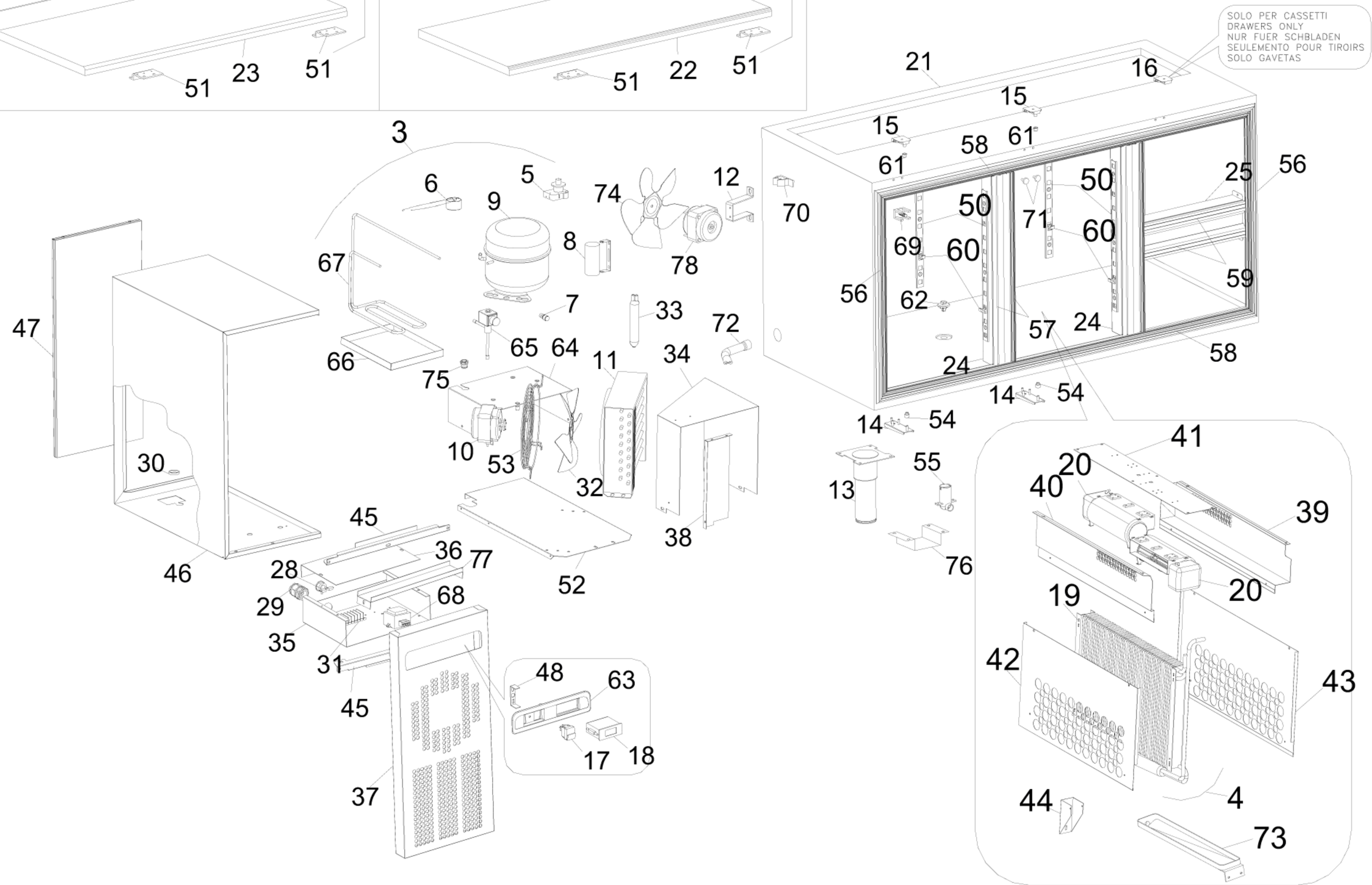

# Modello Typ Model Modele Modelo

| Porte / Ture / Doors / Portes / Portas / Gabetas | | JA<br>JAA<br>JAM | JA2<br>JA2A<br>JA2M | JB<br>JBA<br>JBM | JB2<br>JB2A<br>JB2M | JB4<br>JB4A<br>JB4M |
|---|---|---|---|---|---|---|
| | SX | 1 | 1 | 2 | 2 | 1 |
| | DX | 1 | ... | 1 | ... | ... |

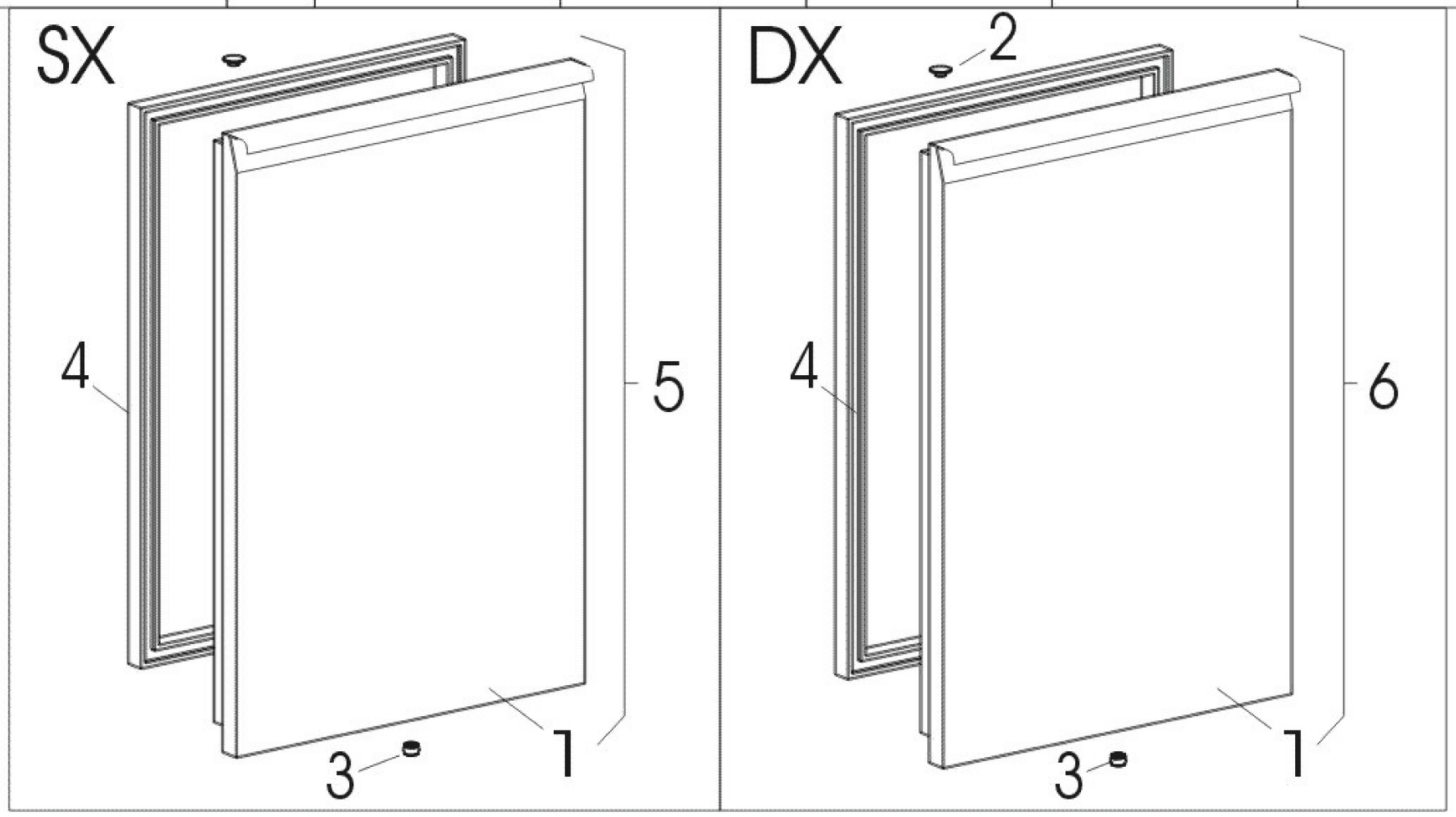

| | | Modello | Typ | Model | Modele | Modelo |
|---|---|---|---|---|---|---|
| | | JA<br>JAA<br>JAM | JA2<br>JA2A<br>JA2M | JB<br>JBA<br>JBM | JB2<br>JB2A<br>JB2M | JB4<br>JB4A<br>JB4M |
| Num. Cassetti<br>Schublad<br>Drawers<br>Tiroirs<br>Gabetas | 1/2 | --- | 2 | --- | 2 | 4 |

