Mod./Type: **_70/... TP...E... - _90/... TP...E...**

EXTREME

cod./num. 2531633.00

data/date: 13/05/2014

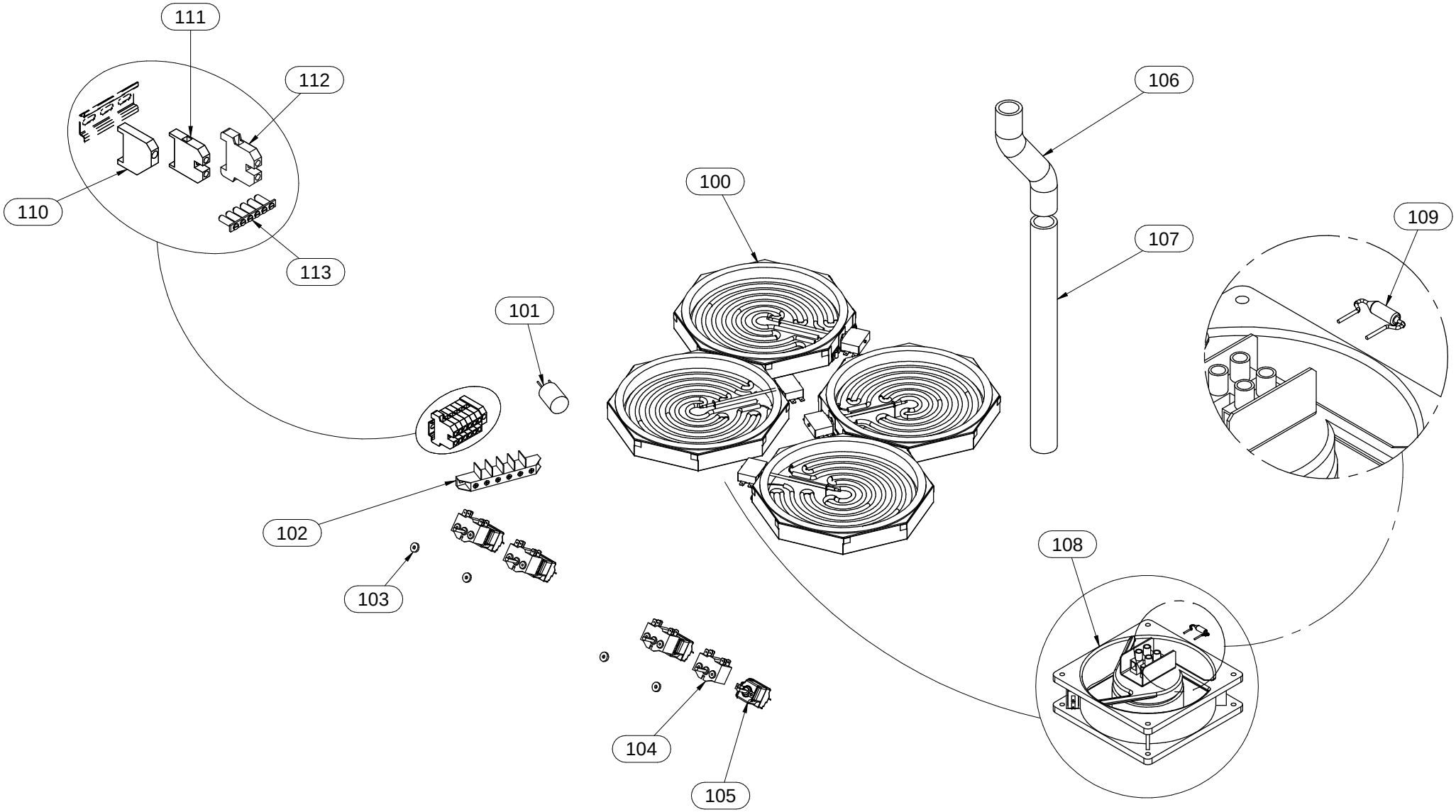

Mod./Type:	_90/... TPFE... EXTREME	cod./num.	2531822.00
		data/date:	25/08/2014

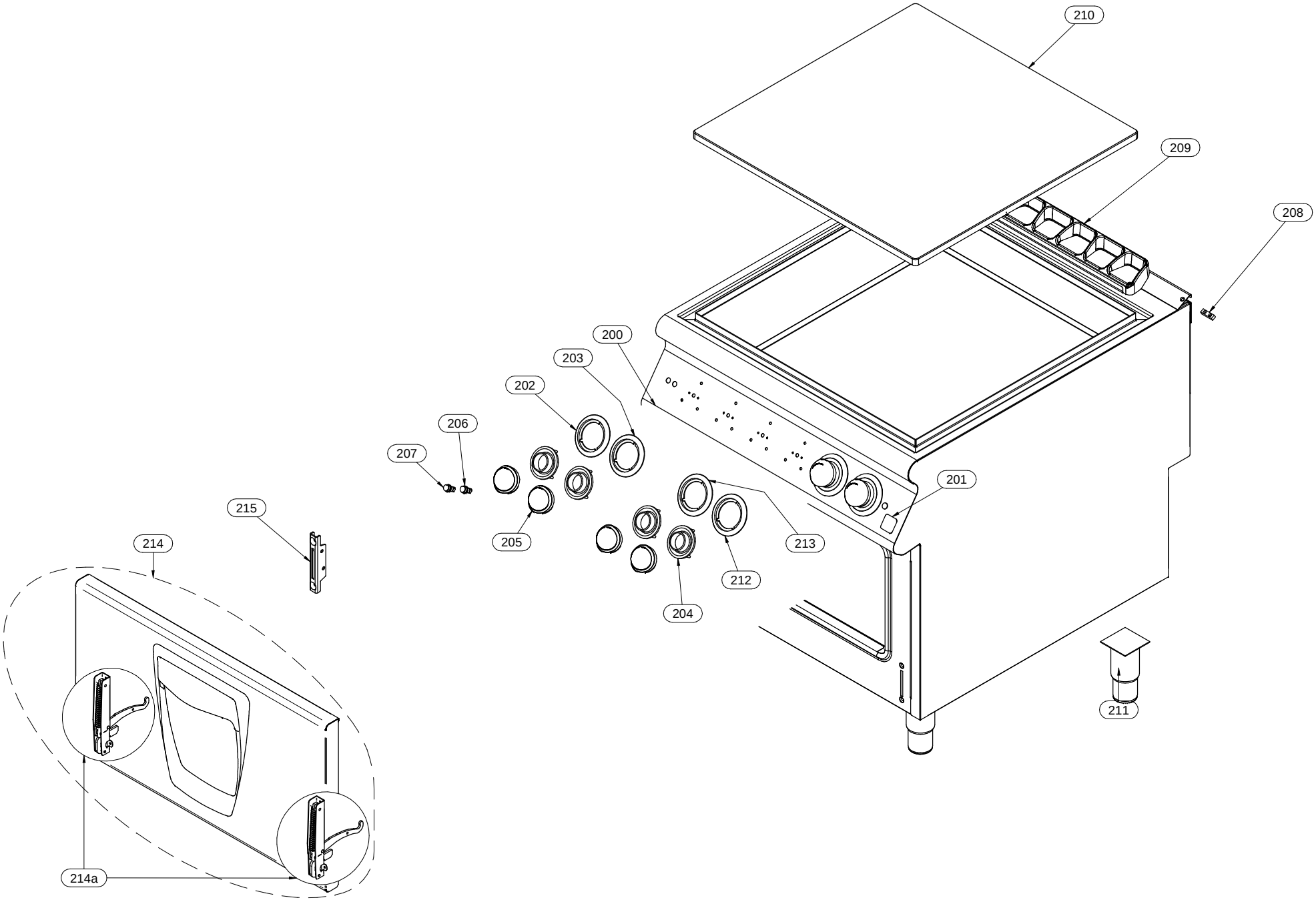

Mod./Type: **_70/... ...F...E... - _90/... ...F...E...**

ELECTRIC OVEN

cod./num. 2531630.00

data/date: 06/06/2014

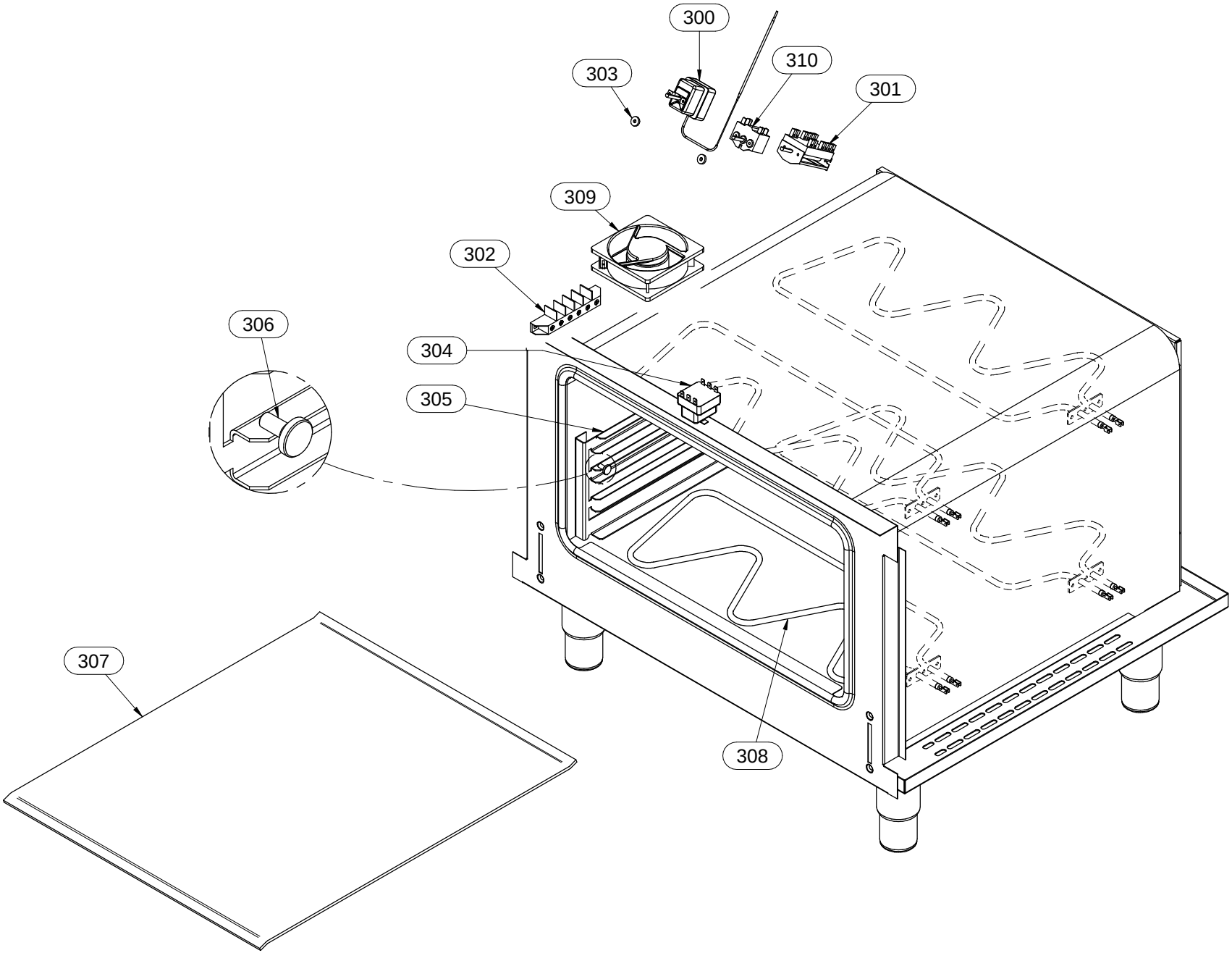

Mod.:	_70/... TP...E... - _90/... TP...E... EXTREME			cod. / num. 2531634.00 data / date 05/05/2014 rif. / ref. 2531633.00		_70/80 TPE...	_70/80 TPFE	_70/80 TPFE2	_90/80 TPE...	_90/80 TPE2...	_90/80 TPFE	_90/80 TPFE2	NOTE	
POS.	DESCRIZIONE	DESCRIPTION	DENOMINATION	BENENNUNG	COD.	Q.ty								
100	RESISTENZA	HEATING ELEMENT	RESISTANCE	HEINZELEMENT	665.052.00	4	4	4						
					965.041.00				4	4	4	4		
101	FILTRO ANTIDISTURBO	STORFILTER	FILTER ANTIBROUILLAGE	ANTIJAMMING FILTER	464.067.00	3	3	3	3	3	3	3		
102	MORSETTIERA	TERMINAL BOARD	BORNES	KLEMMENBRETT	M566050500	1	1	-	1	-	1	-		
103	GUARNIZIONE	WASHER	GUARNITURE	DICHTUNGSRING	953.020.00	4	6	6	4	4	6	6		
104	COMMUTATORE	CHANGE-OVER SWITCH	COMMUTATEUR	UMSCHALTER	661.093.00	4	4	4	4	4	4	4		
105	TERMOSTATO	THERMOSTAT	THERMOSTAT	THERMOSTAT	661.121.00	4	4	4	4	4	4	4		
106	SCARICO	DRAIN	VIDANGE	ABLAUF	0831.2027.00	0.25	0.8	0.8	0.25	0.25	0.5	0.5	(U.M. metri)	(U.M.meters)
107	SCARICO	DRAIN	VIDANGE	ABLAUF	0831.2027.00	0.41	-	-	0.41	0.41	-	-	(U.M. metri) - NO PER VERSIONE (-T)	(U.M.meters) - NOT FOR (-T) VERSION
108	VENTOLA	FAN	VENTILATEUR	LÜFTERRAD	764.055.00	1	1	1	1	1	1	1		
109	TERMOFUSIBILE	THERMAL FUSE	FUSIBLE THERMIQUE	THERMO-SCHMELZSICHERUNG	663.078.00	1	1	1						
					663.077.00				1	1	1	1		
110	BLOCCAMORSETTI	TERMINAL STOPPER	BORNE BLOQUANT	BLÖCK-KLEMME	663.059.00	-	-	1	-	1	-	1		
111	MORSETTO	TERMINAL	BORNE	KLEMME	663..061.00	-	-	6	-	6	-	6		
112	MORSETTO TERRA - PE	PE-TERMINAL	BORNE PE	ERD-KLEMME	663.060.00	-	-	1	-	1	-	1		
113	BARRETTE COLLEGAMENTO	CONNECTOR PIN	BARRETTE DE CONNECTION	VERBINDUNG-STAB	663.056.00	-	-	1	-	1	-	1		
114														
115														
116														
117														
118														
119														
120														
121														
122														
123														
124														
125														
126														
127														
128														
129														
130														
131														
132														
133														
134														
135														
136														
137														
138														
139														
140														

Mod.:	_90/... TPFE... EXTREME			cod. / num. 2531823.00 data / date 25/08/2014 rif. / ref. 2531822.00		EM90/80 TPFE	EM90/80 TPFE2	NOTE	
POS.	DESCRIZIONE	DESCRIPTION	DENOMINATION	BENENNUNG	COD.	Q. ty			
200	CRUSCOTTO	CONTROL PANEL	BANDEAU	BEDIENBLENDE	9111345.00	1	1		
201	MARCHIO	BRAND NAME	MARQUE	MARKENZEICHEN	982.021.00	1	1	**FROM: 15.12.2011**	**TO: 31.01.2014**
					982.023.00	1	1	**FROM: 01.02.2014**	**TO:...**
202	SERIGRAFIA	SCREEN PRINT	SÉRIGRAPHIE	SIEBDRUCK	910.171.00	2	2		
203	SERIGRAFIA	SCREEN PRINT	SÉRIGRAPHIE	SIEBDRUCK	910.172.00	2	2		
204	LABIRINTO	LABYRINTH	LABYRINTHE	LABYRINTH	256.235.00	6	6		
205	MANOPOLA	KNOB	BOUTON	DREHKNOPF	256.234.00	6	6		
206	LAMPADA SPIA ARANCIO	ORANGE INDICATOR LIGHT	LAMPE TEMOIN ORANGE	ORANGE KONTROLLAMPE	963.013.00	2	2		
207	LAMPADA SPIA ROSSA	RED INDICATOR LIGHT	LAMPE TEMOIN ROUGE	ROTE KONTROLLLAMPE	963.014.00	1	1		
208	PIASTRINA GIUNZIONE	FIXING PLATE	PLAQUETTE FIXAGE	BEFESTIGUNGSPLATTE	941.130.00	1	1		
209	GRIGLIA CAMINO	FLUE GRIDDLE	GRILLE POUR CHEMINÉE	KAMINROST	982.013.00	1	1		
210	PIASTRA	SOLID TOP	PLAQUE COUP DE FEU	KOCHFELD	981.097.00	1	1		
211	PIEDINO	FOOT	PIED	STELLFUSS	912.090.00	4	4	**FROM: 15.12.2011**	**TO: 17.05.2013**
					912.090.14	4	4	**FROM: 18.05.2013**	**TO:...**
212	SERIGRAFIA	SCREEN PRINT	SÉRIGRAPHIE	SIEBDRUCK	910.193.00	1	1		
213	SERIGRAFIA TERMOSTATO	THERMOSTAT SCREEN PRINT	SÉRIGRAPHIE THERMOSTAT	SIEBDRUCK DES THERMOSTAT	910.175.00	1	1		
214	PORTA	DOOR	PORTE	TÜR	910.297.00	1	1		
214a	CERNIERA	JOINT	CHARNIERE	SCHARNIER	684.030.00	2	2		
215	PORTARULLINO	ROLL HOLDER	PORTE-AIGUILLE DE ROULEMENT	ROLLE-TRÄGER	684.011.00	2	2		
216									
217									
218									
219									
220									
221									
222									
223									
224									
225									
226									
227									
228									
229									
230									
231									

Mod.:	_70/… …F…E… - _90/… …F…E… ELECTRIC OVEN			cod. / num. 2531631.00 data / date 02/05/2014 rif. / ref. 2531630.00		_70/……FGE…	_70/……FE…	_70/… TPFE…	_90/……FGE…	_90/160 …FGE…	_90/……FE…	_90/… TPFE…	NOTE
POS.	DESCRIZIONE	DESCRIPTION	DENOMINATION	BENENNUNG	COD.	Q. ty							
300	TERMOSTATO	THERMOSTAT	THERMOSTAT	THERMOSTAT	661.114.00	1	1	1	1	2	1	1	
301	COMMUTATORE FORNO	OVEN CHANGE-OVER SWITCH	COMMUTATEUR FOUR	UMSCHALTER BACKOFEN	661.113.00	1	1	1	1	2	1	1	
302	MORSETTIERA	TERMINAL BOARD	BORNES	KLEMMENBRETT	M566050500	1	-	-	1	1	-	-	
303	GUARNIZIONE	WASHER	GUARNITURE	DICHTUNGSRING	953.020.00	2	2	2	2	4	2	2	
304	TERMOSTATO SICUREZZA	SAFETY THERMOSTAT	THERMOSTAT DE SECURITE	TEMPERATURBEGRENZER	661.115.00	1	1	1	1	2	1	1	
305	REGGIGRIGLIA	TRAY RACK	PORTE-PLAQUES	EINHÄNGEGESTELL	622.967.00	2	2	2	2	4	2	2	
306	FISSAGGIO REGGIGRIGLIA	TRAY RACK FIXING	FIXAGE PORTE-PLAQUES	BEFESTIGUNG DES EINHÄNGEGESTELLS	641.090.00	4	4	4	4	8	4	4	
307	SUOLA FORNO	INNER OVEN SOLE	SOLE DU FOUR	OFENINNENBODEN	635.029.00	1	1	1	1	2	1	1	
308	RESISTENZA FORNO	OVEN HEATING ELEMENT	RESISTANCE DU FOUR	BACKOFEN HEINZELEMENT	965.060.00	4	4	4	4	8	4	4	
309	VENTOLA	FAN	VENTILATEUR	LÜFTERRAD	764.055.00	-	-	1	-	-	-	1	
310	COMMUTATORE	CHANGE-OVER SWITCH	COMMUTATEUR	UMSCHALTER	661.093.00	-	-	1	-	-	-	1	
311													
312													
313													
314													
315													
316													
317													
318													
319													
320													
321													
322													
323													
324													
325													
326													
327													
328													
329													
330													
331													
332													
333													
334													
335													
336													
337													
338													
339													
340													