lamber

Dishwashers

Ed.
01/2016

Rev. C

from
01/2008

GS400

SPARE PARTS

DSP3

CE

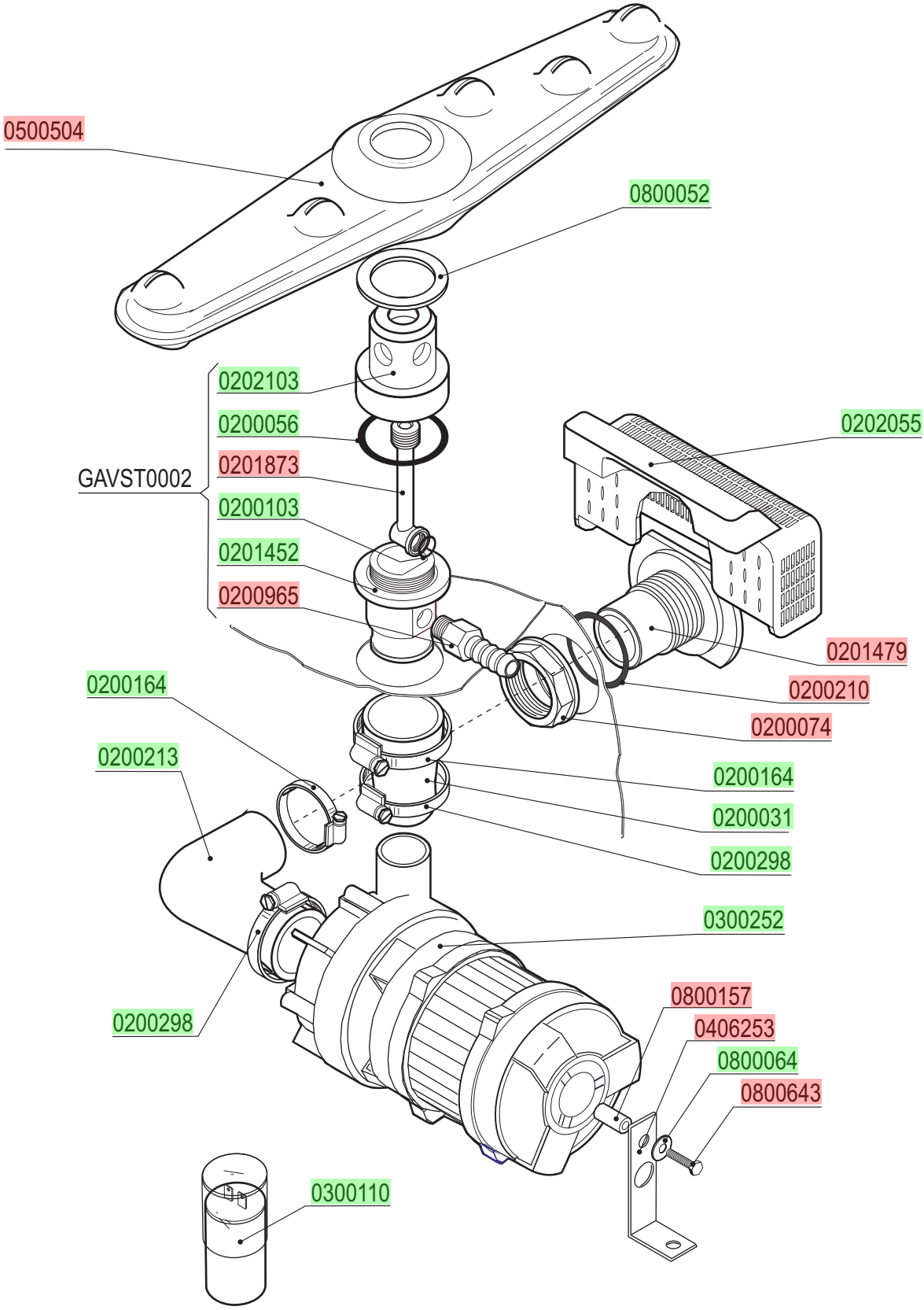
0500504
0800052
0202103
0200056
0201873
GAVST0002
0200103
0201452
0200965
0202055
0201479
0200210
0200074
0200164
0200213
0200164
0200031
0200298
0300252
0800157
0406253
0800064
0800643
0200298
0300110

lamber	RINSE COMPONENTS	MOD. GS400	TAV. 2 C ED. 01/2016

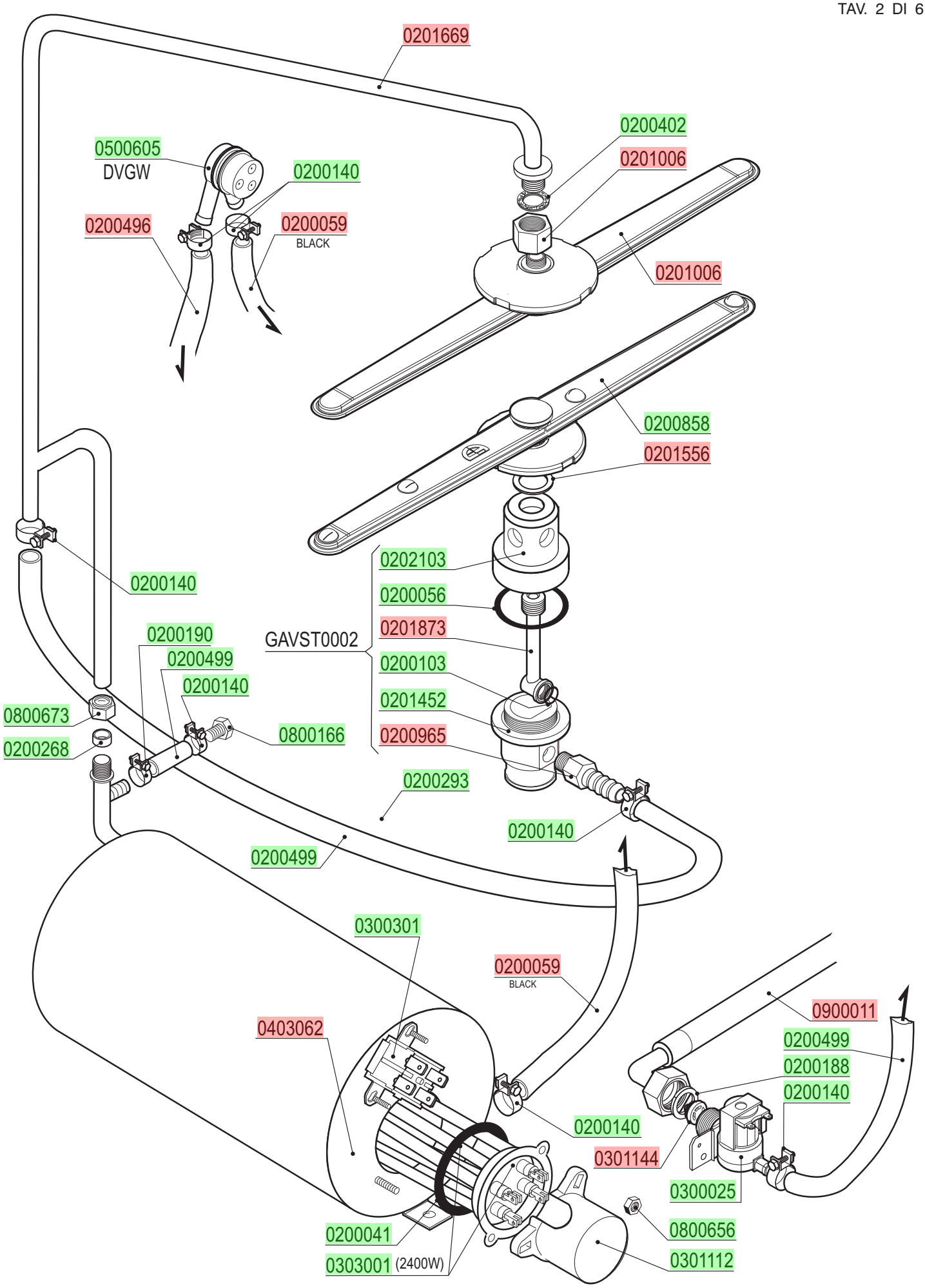

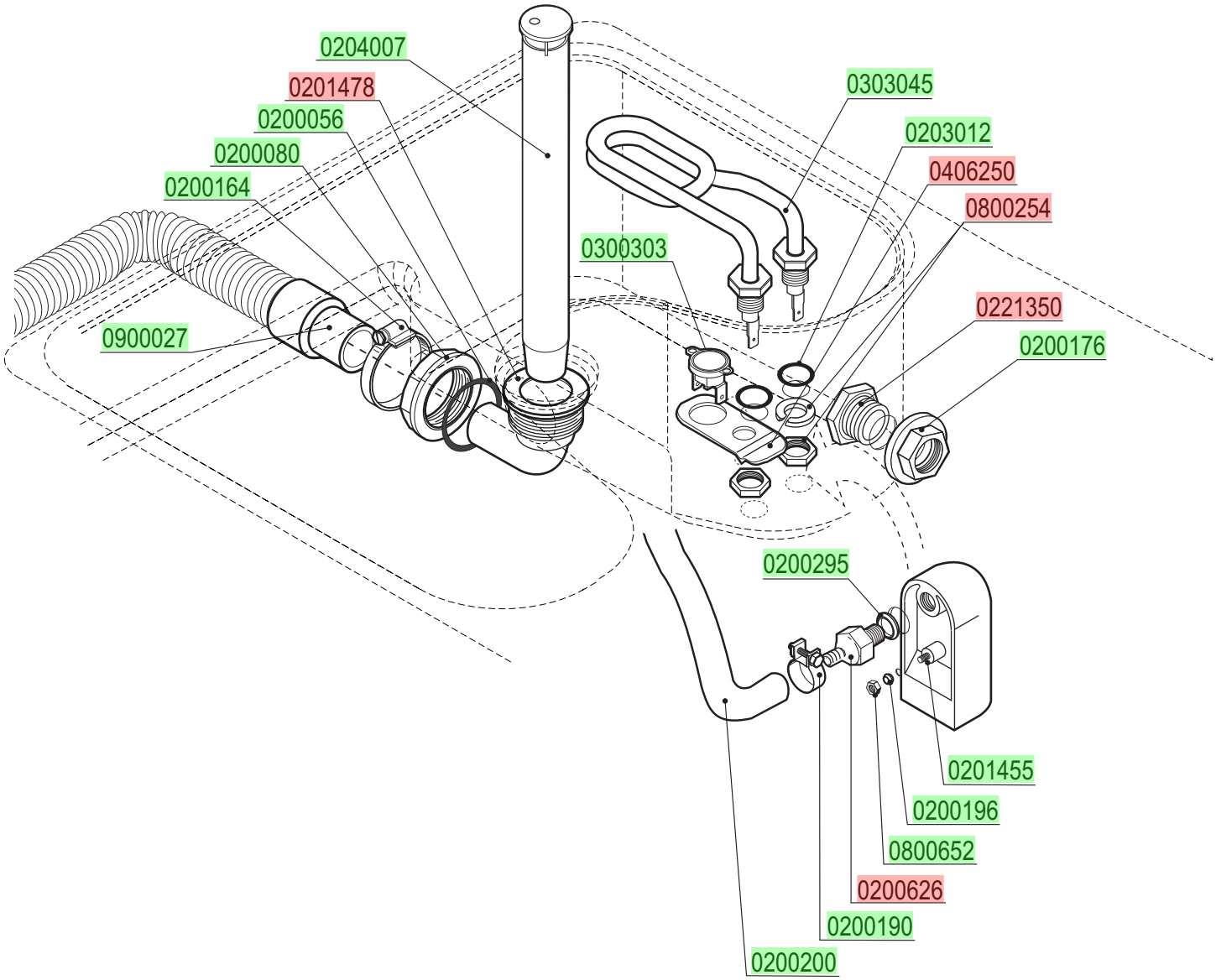
0204007
0201478
0200056
0200080
0200164
0900027
0303045
0203012
0406250
0800254
0300303
0221350
0200176
0200295
0201455
0200196
0800652
0200626
0200190
0200200

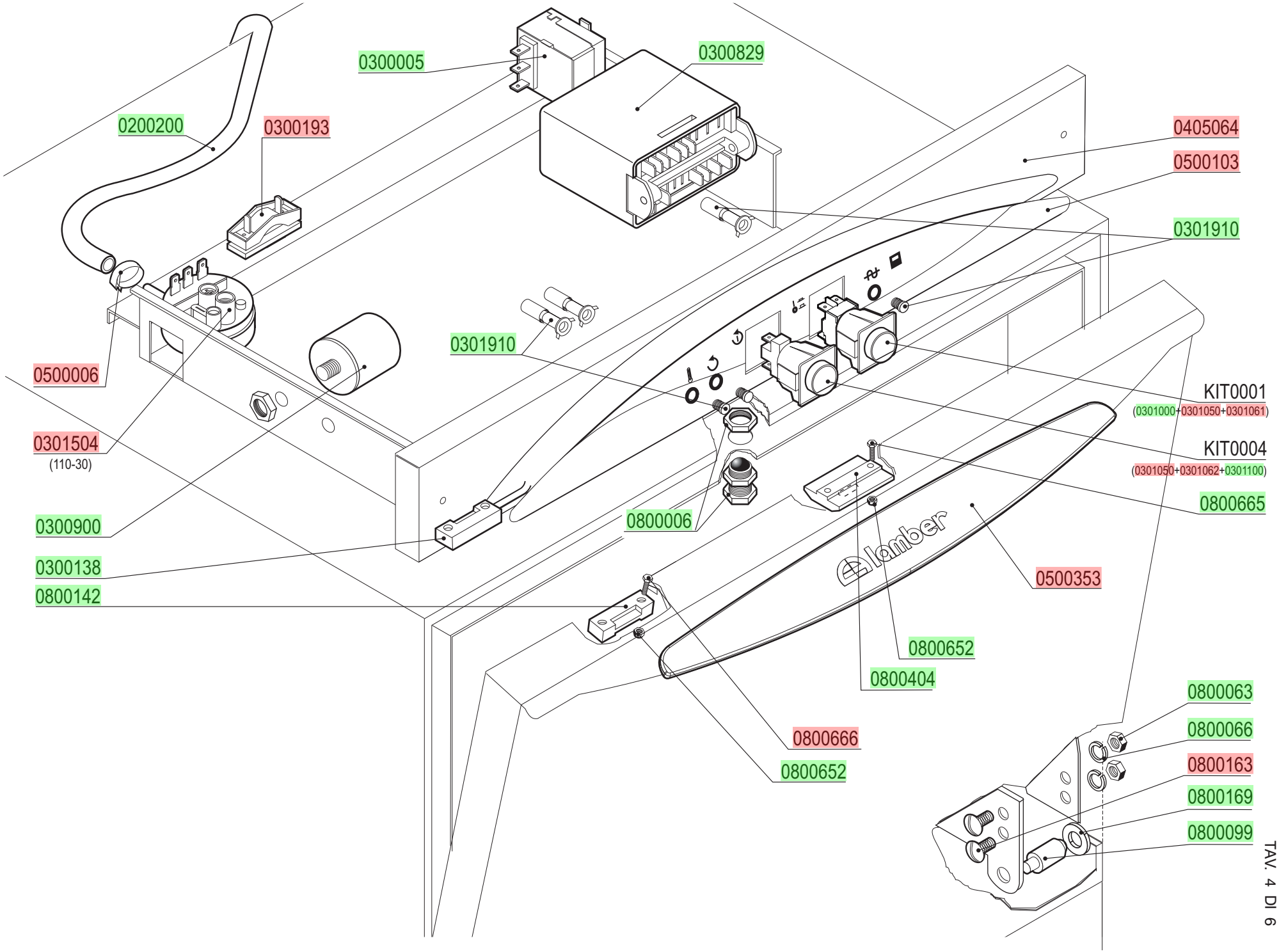

lamber

CONTROL BOX

MOD. GS400

TAV. 4 C

ED. 01/2016

TAV. 4 DI 6

lamber	HOOD	MOD. GS400	TAV. 5 C ED. 01/2016

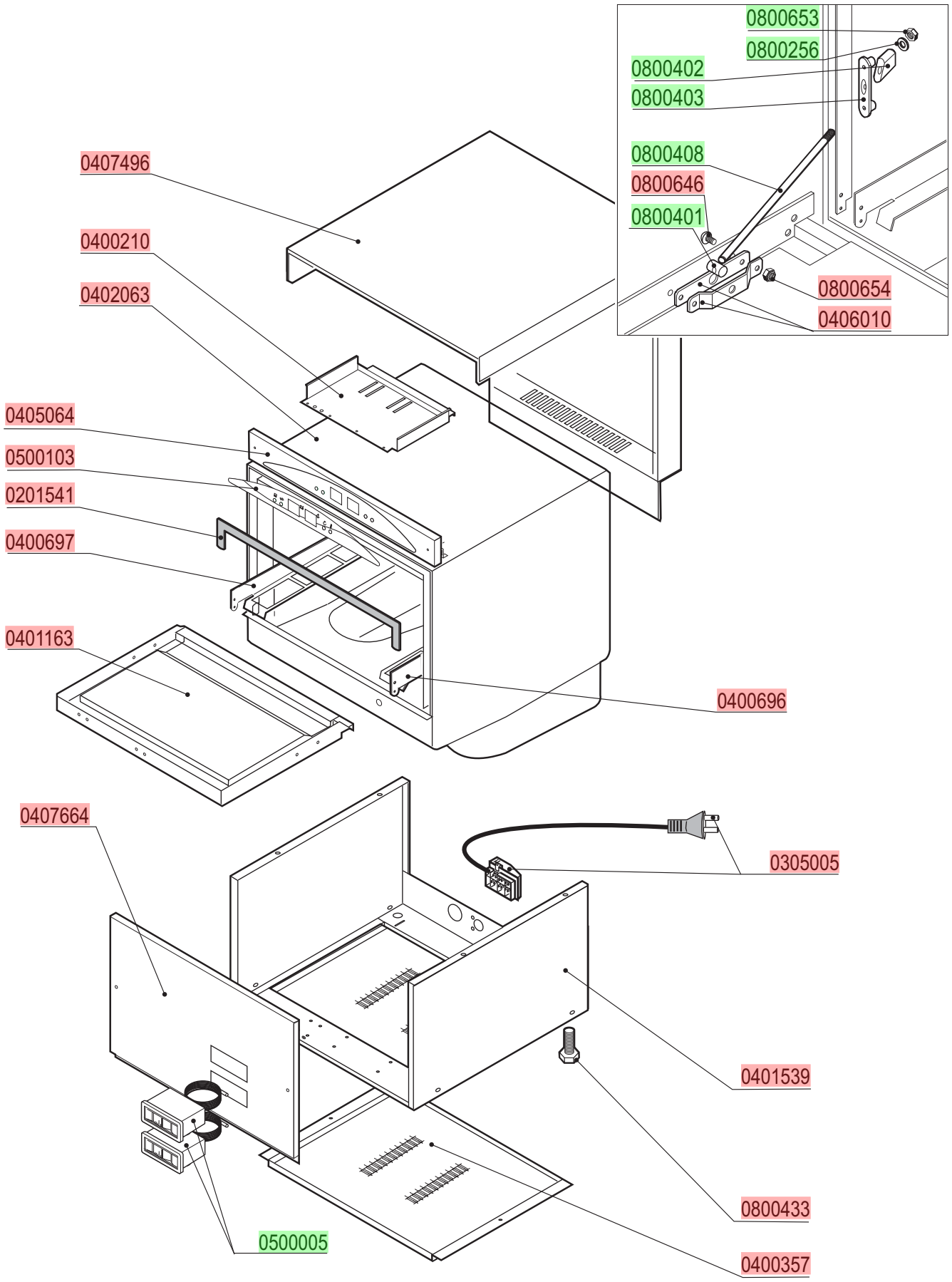

lamber	WASHING PUMP	MOD. GS400	TAV. 6 C ED. 01/2016

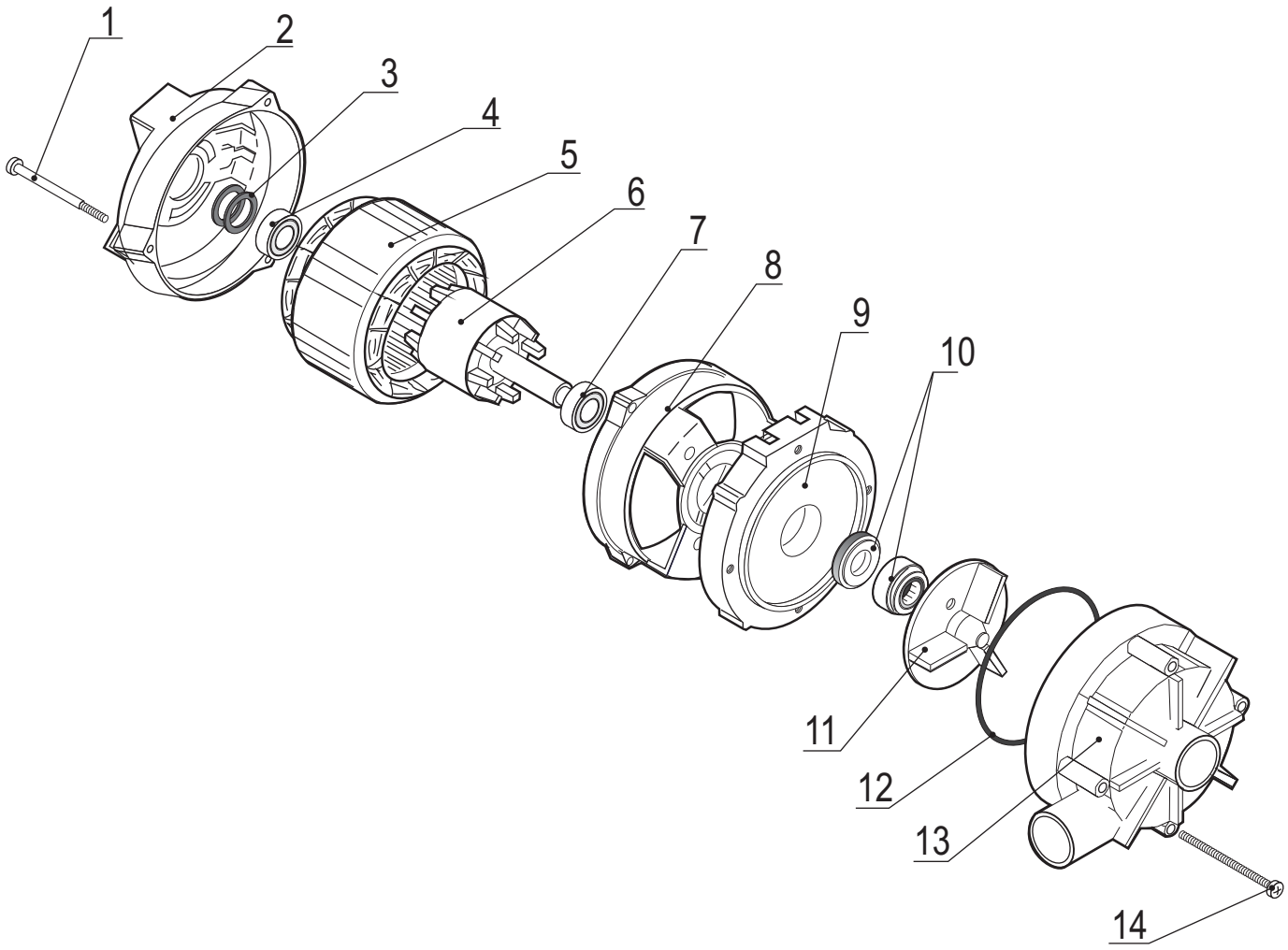

	CODE	Power		Pump delivery	Voltage
		Hp	W	lt/min	Volt
ZF115	0300252	0,10	210	115	230 V/1~ 50Hz

Pos.	Codice	Description
1		Screw
2		Back shield
3		Split ring
4		Ball bearing
5		Stator
6		Rotor
7		Ball bearing
8		Front shield
9		Pump support
10	0200397	Pump seal group
11	0209804	Impeller
12	0209905	OR-joint
13	0200595	Pump body
14		Screw

cod.0300252

