BOTELLEROS / BOTTLE RACK

- BFP - 100
- BFP - 150
- BFP - 200
- BFP - 250
- BFP - 300

Versión 2015-10

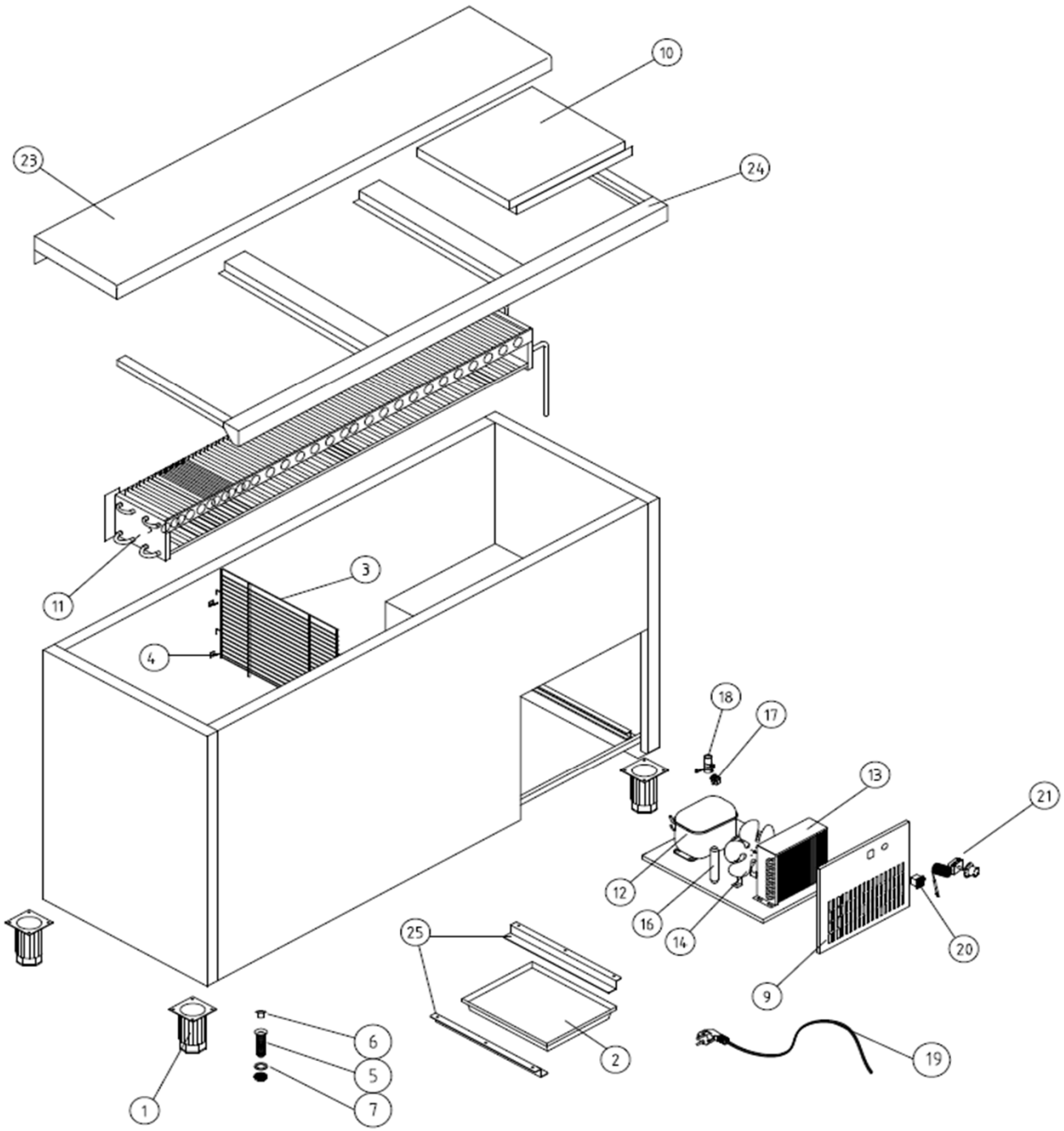

# BOTELLEROS / BOTTLE RACK

FAGOR

- BFP - 100
- BFP - 150
- BFP - 200
- BFP - 250
- BFP - 300

Versión 2015-10

| Nº | CODE CÓDIGO | RECOM. | DESCRIPTION | DESCRIPCIÓN | BFP - 100 | BFP - 150 | BFP - 200 | BFP - 250 | BFP - 300 |
|---|---|---|---|---|---|---|---|---|---|
| 1 | 12043729 | | PATA REGULABLE 65/88 | ADJUSTABLE LEG 65/88 | 4 | 4 | 4 | 6 | 6 |
| 2 | 12046294 | | BANDEJA BOTELLERO | TRAY BOTTLE | 1 | 1 | 1 | 1 | 1 |
| 3 | 12043964 | | SEPARADOR VERTICAL BFP | SEPARATOR UPRIGHT | 1 | 2 | 3 | 4 | 5 |
| 4 | 12090875 | | SOPORTE SEPARADOR | SUPPORT SEPARATOR | 4 | 8 | 12 | 16 | 20 |
| 5 | 12037489 | | DESAG COMPL 3/4 GRIS+TUERCA | DRAIN 3/4 | 1 | 1 | 1 | 1 | 1 |
| 6 | 12037989 | | TAPON DESAGÜE DE 3/4 CIEGO | STOPPER DRAIN 3/4 | 1 | 1 | 1 | 1 | 1 |
| 7 | 12037891 | | JUNTA GOMA DESAGÜE 3/4 | RUBBER BOARD DRAIN | 1 | 1 | 1 | 1 | 1 |
| 9 | 12071333 | | REJILLA CUADRO MANDOS | CONTROL PANEL | 1 | 1 | 1 | 1 | 1 |
| 10 | 12045302 | | PUERTAS BOTELLERO BFP | DOOR BOTTLE | 2 | 3 | 4 | 5 | 6 |
| 11 | 12044944 | | EVAPORADOR G-100 | EVAPORATOR G - 100 | 1 | | | | |
| 11 | 12031505 | | EVAP.BOTELLERO G-120 | EVAPORATOR G - 120 | | 1 | | | |
| 11 | 12030026 | | EVAP.BOTELLERO G-170 | EVAPORATOR G - 170 | | | 1 | | |
| 11 | 12027267 | | EVAP.BOTELLERO G-220 | EVAPORATOR G -220 | | | | 1 | |
| 11 | 12028256 | | EVAP.BOTELLERO G-270 | EVAPORATOR G -270 | | | | | 1 |
| 12 | 12059098 | | COMP.EMT45HDR | COMP.EMT45HDR | 1 | | | | |
| 12 | 12059155 | | COMPR.NL-6,1 MF | COMPR.NL-6,1 MF | | 1 | | | |
| 12 | 12059154 | | COMPR.NL-7,3 MF | COMPR.NL-7,3 MF | | | 1 | | |
| 12 | 12046754 | | COMP.NEK6210Z | COMP.NEK6210Z | | | | 1 | 1 |
| 13 | 12034061 | | CONDENSADOR 4X2 SIN BAFLE | CONDENSADOR 4X2 SIN BAFLE | 1 | | | | |
| 13 | 12032903 | | CONDENSADOR 9x2 | CONDENSADOR 9x2 | | 1 | 1 | | |
| 13 | 12032340 | | CONDENSADOR 9x3 FAGC0021 | CONDENSADOR 9x3 FAGC0021 | | | | 1 | 1 |
| 14 | 12067523 | | VENT. 5W 200/28º IMPELENTE | FAN 5W 200/28º IMPELENTE | 1 | | | | |
| 14 | 12067522 | | VENT. 10W 254/22º IMPELENTE | FAN 10W 254/22º IMPELENTE | | 1 | 1 | 1 | 1 |
| 16 | 12048655 | | FILTRO DESHIDRAT.40GR 1/4X1/4 | FILTER 40 GR 1/4x1/4 | 1 | 1 | 1 | 1 | 1 |
| 17 | 12047835 | | RELE ARRANQUE EMT 45 HDR | RELE EMT 45 HDR | 1 | | | | |
| 17 | 12058829 | | RELE ARRANQ 117U6015 | RELE 117U6015 | | 1 | | | |
| 17 | 12058917 | | RELE ARRANQ NL-8.4-MF 117U6016 | RELE NL-8.4-MF 117U6016 | | | 1 | | |
| 17 | 12036939 | | RELE ARRAN. COMP. NEK 6210Z | RELE NEK 6210Z | | | | 1 | 1 |
| 18 | 12048046 | | COMPR.ARRANQUE EMT 45 HDR | EMT 45 HDR START CAPACITOR | 1 | | | | |
| 18 | 12033454 | | CONDEN.ARRANQUE FR-117U5015 80 mF | FR-117U50515 80 Mf START CAPACITOR | | 1 | 1 | | |
| 18 | 12040120 | | CONDENSADOR COMP. NEK 6210Z | NEK 6210Z START CAPACITOR | | | | 1 | 1 |
| 19 | 12036805 | | MANG 3x1x2500 BL. SCHUKO 3T | 3x1x2500 WHITE SCHUKO 3T HOSE | 1 | 1 | 1 | 1 | 1 |
| 20 | 12047553 | | INTERRUPTOR BIPOLAR | SWITCH | 1 | 1 | 1 | 1 | 1 |
| 21 | 12061639 | | TERMOSTATO TAPON MONEDA | THERMOSTAT PLUG CURRENCY | 1 | 1 | 1 | 1 | 1 |
| 23 | 12084416 | | C. J. ENCIMERA BFP-100 | TOP BFP - 100 | 1 | | | | |
| 23 | 12030890 | | C.J. ENCIMERA BFP-150 | TOP BFP - 150 | | 1 | | | |
| 23 | 12029562 | | C.J. ENCIMERA BFP-200 | TOP BFP - 200 | | | 1 | | |
| 23 | 12029587 | | C.J. ENCIMERA BFP-250 | TOP BFP - 250 | | | | 1 | |
| 23 | 12084417 | | C.J. ENCIMERA BFP-300 | TOP BFP - 300 | | | | | 1 |
| 24 | 12084372 | | EMBELLECEDOR COMPLETO BFP-100 | COVER BFP - 100 | 1 | | | | |
| 24 | 12030755 | | EMBELLECEDOR COMPLETO BFP-150 | COVER BFP - 150 | | 1 | | | |
| 24 | 12029826 | | EMBELLECEDOR COMPLETO BFP-200 | COVER BFP - 200 | | | 1 | | |
| 24 | 12029435 | | EMBELLECEDOR COMPLETO BFP-250 | COVER BFP - 250 | | | | 1 | |
| 24 | 12084377 | | EMBELLECEDOR COMPLETO BFP-300 | COVER BFP - 300 | | | | | 1 |
| 25 | 12071377 | | GUIAS BANDEJA EVAPORACIÓN | TRAY GUIDES | 2 | 2 | 2 | 2 | 2 |

Notes: