DESPIECES DEL SERVICIO TECNICO

# Hornos Estáticos - Fours Statiques
# Static Ovens - Kombinationsöfen

## Mod.

**HG9-10**
**HG9-20**
**HE9-10**
**HE9-20**

**DICIEMBRE 1999**

FAGOR

Fagor Industrial, S. Coop.

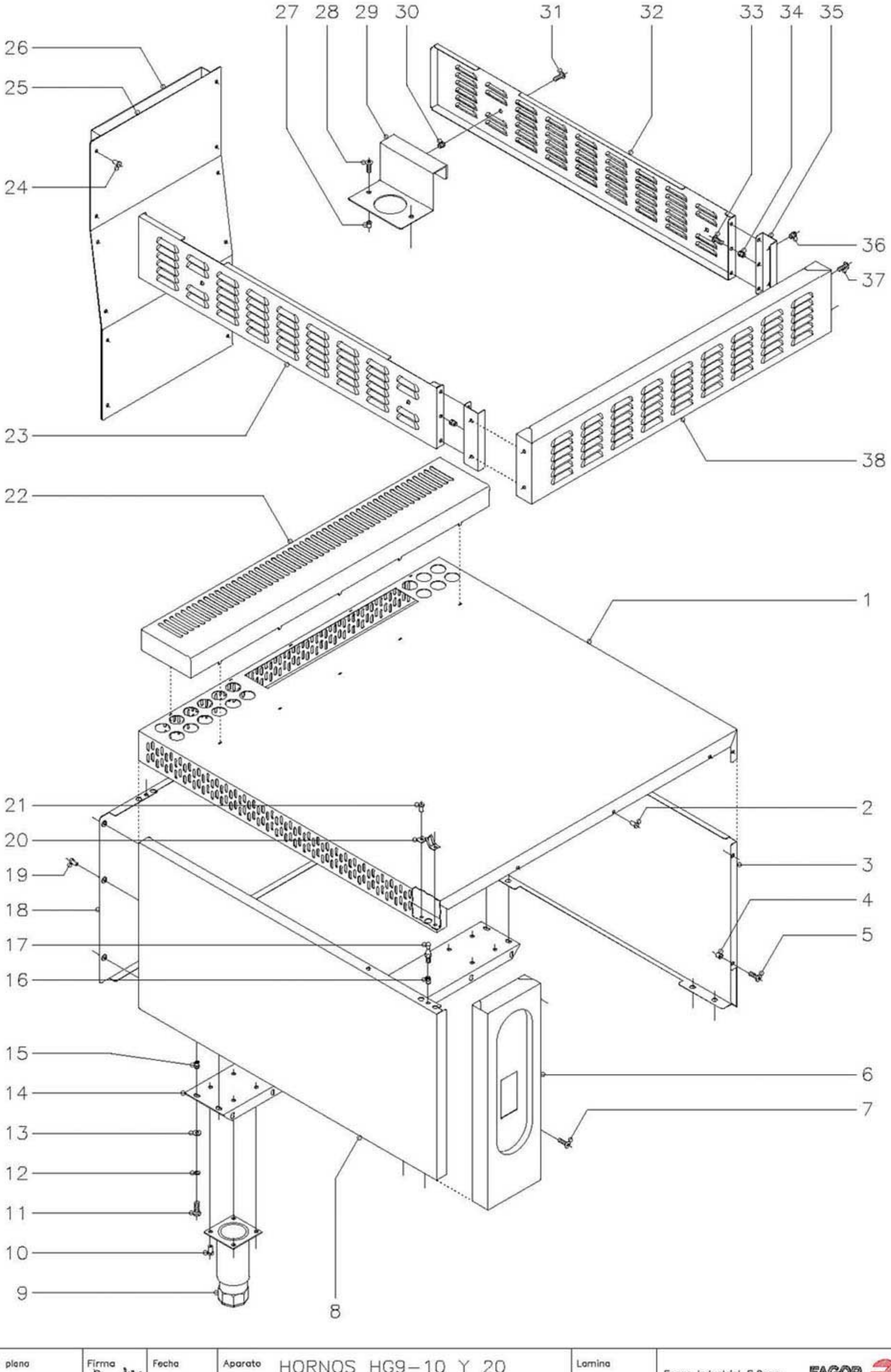


| N plano | Firma | Fecha | Aparato | Lamina | |
|---|---|---|---|---|---|
| C-762 | | 12-99 | HORNOS HG9-10 Y 20<br>HORNOS HE9-10 Y 20 | 1 | Fagor Industrial S.Coop.<br>O<ate |

| MOD. | HORNOS | ZONA | MUEBLE | PLANO | C-762 |
|---|---|---|---|---|---|

| ITEM | CODIGO | DENOMINACION | TEXTO | HG9-10 | HG9-20 | HE9-10 | HE9-20 | | | | | | NOTAS |
|---|---|---|---|---|---|---|---|---|---|---|---|---|---|
| 1 | T982803 | Cubierta de horno | | 1 | 2 | 1 | 2 | | | | | | |
| 2 | Q419005 | Remache tubular Ø 4x8 | | 3 | 6 | 3 | 6 | | | | | | |
| 3 | T982801 | Panel lateral derecho | | 1 | 2 | 1 | 2 | | | | | | |
| 4 | Q221304 | Remache redondo M-5 | | 3 | 6 | 3 | 6 | | | | | | |
| 5 | Q152004 | Tornillo aplastado M-5x13 | | 3 | 6 | 3 | 6 | | | | | | |
| 6 | T982805 | Portamandos lateral | | 1 | 2 | - | - | | | | | | |
| 6 | U672852 | Portamandos lateral | | - | - | 1 | 2 | | | | | | |
| 7 | Q152004 | Tornillo aplastado M-5x13 | | 2 | 4 | 2 | 4 | | | | | | |
| | Q221304 | Remache redondo M-5 | | 2 | 4 | 2 | 4 | | | | | | |
| 8 | T982800 | Panel lateral izquierdo | | 1 | 2 | 1 | 2 | | | | | | |
| 9 | X260150 | Pata regulable | | 4 | 8 | 4 | 8 | | | | | | |
| 10 | Q411304 | Remache avibulb Ø 4,8 | | 16 | 32 | 16 | 32 | | | | | | |
| 11 | Q012043 | Tornillo exagonal M-6x20 | | 8 | 16 | 8 | 16 | | | | | | |
| 12 | Q262040 | Arandela muelle A-6 | | 8 | 16 | 8 | 16 | | | | | | |
| 13 | Q302022 | Arandela plana Ø 16xØ 6x1,2 | | 8 | 16 | 8 | 16 | | | | | | |
| 14 | X172601 | Liston soporte patas | | 2 | 4 | 2 | 4 | | | | | | |
| 15 | Q221343 | Remache exagonal M-6 | | 8 | 16 | 8 | 16 | | | | | | |
| 16 | Q221342 | Remache exagonal M-5 | | 3 | 6 | 3 | 6 | | | | | | |
| 17 | X012612 | Piton enganche | | 3 | 6 | 3 | 6 | | | | | | |
| 18 | T982802 | Panel posterior | | 1 | 2 | 1 | 2 | | | | | | |
| 19 | Q419005 | Remache tubular Ø 4x8 | | 6 | 12 | 6 | 12 | | | | | | |
| 20 | X010503 | Muelle enganche piton | | 3 | 6 | 3 | 6 | | | | | | |
| 21 | Q419007 | Remache tubular Ø 3,2x6 | | 6 | 12 | 6 | 12 | | | | | | |
| 22 | T982806 | Embellecedor chimenea | | 1 | 1 | 1 | 1 | | | | | | |
| 23 | T992801 | Zocalo lateral izquierdo | | - | 1 | - | 1 | | | | | | |
| 24 | Q419005 | Remache tubular Ø 4x8 | | - | 12 | - | - | | | | | | |
| 25 | T992601 | Suplemento anterior chimenea | | - | 1 | - | - | | | | | | |
| 26 | T992602 | Suplemento posterior chimenea | | - | 1 | - | - | | | | | | |
| 27 | Q221304 | Remache redondo M-5 | | - | 8 | - | 8 | | | | | | |

| MOD. | HORNOS | ZONA | MUEBLE | PLANO | C-762 |
|---|---|---|---|---|---|

| ITEM | CODIGO | DENOMINACION | TEXTO | HG9-10 | HG9-20 | HE9-10 | HE9-20 | | | | | | NOTAS |
|---|---|---|---|---|---|---|---|---|---|---|---|---|---|
| 28 | Q152004 | Tornillo aplastado M-5x13 | | - | 8 | - | 8 | | | | | | |
| 29 | T992600 | Escuadra fijacion pata | | - | 4 | - | 4 | | | | | | |
| 30 | Q221342 | Remache exagonal M-5 | | - | 4 | - | 4 | | | | | | |
| 31 | Q152004 | Tornillo aplastado M-5x13 | | - | 4 | - | 4 | | | | | | |
| 32 | T992800 | Zocalo lateral derecho | | - | 1 | - | 1 | | | | | | |
| 33 | Q152004 | Tornillo aplastado M-5x13 | | - | 6 | - | 6 | | | | | | |
| 34 | Q221342 | Remache exagonal M-5 | | - | 6 | - | 6 | | | | | | |
| 35 | T992802 | Escuadra amarre zocalo | | - | 2 | - | 2 | | | | | | |
| 36 | Q221342 | Remache exagonal M-5 | | - | 4 | - | 4 | | | | | | |
| 37 | Q152004 | Tornillo aplastado M-5x13 | | - | 4 | - | 4 | | | | | | |
| 38 | T992803 | Zocalo frontal | | - | 1 | - | 1 | | | | | | |

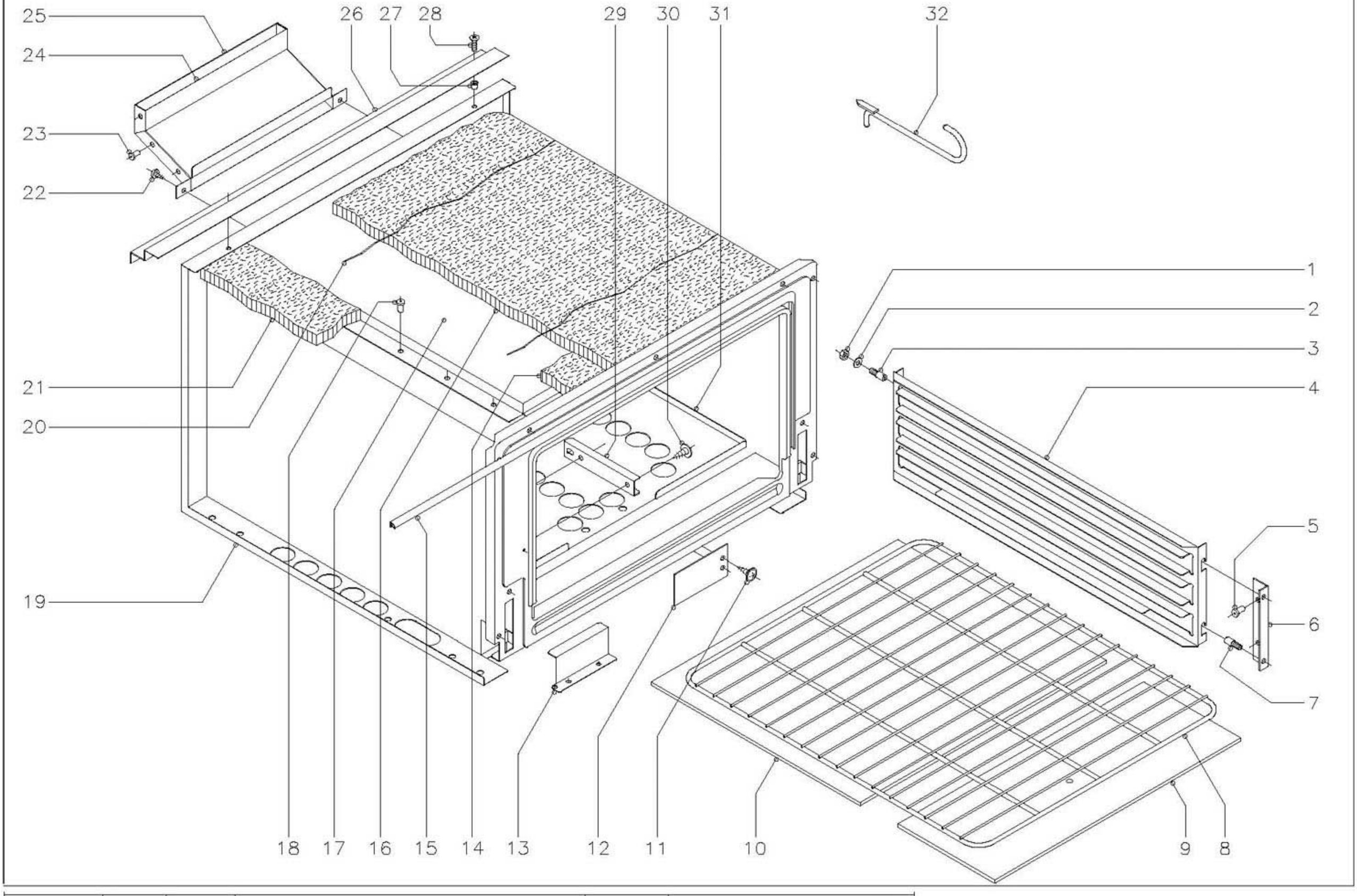


| N plano | Firma | Fecha | Aparato | Lamina | |
|---|---|---|---|---|---|
| C–763 | | 12–99 | HORNO HG9–10 Y 20 | 2 | Fagor Industrial S.Coop. FAGOR<br>Oñate |

| MOD. | HORNOS | ZONA | HORNO GAS | PLANO | C-763 |
|---|---|---|---|---|---|

| ITEM | CODIGO | DENOMINACION | TEXTO | HG9-10 | HG9-20 | | | | | | | | NOTAS |
|---|---|---|---|---|---|---|---|---|---|---|---|---|---|
| 1 | Q162040 | Tuerca exagonal M-6 | | 4 | 8 | | | | | | | | |
| 2 | Q302022 | Arandela plana Ø 16xØ 6x1,2 | | 4 | 8 | | | | | | | | |
| 3 | Q151336 | Tornillo soporte guias | | 4 | 8 | | | | | | | | |
| 4 | U325608 | Guia de bandejas | | 2 | 4 | | | | | | | | |
| 5 | Q419005 | Remache tubular Ø 4x8 | | 4 | 8 | | | | | | | | |
| 6 | U325611 | Escuadra soporte guia bandejas | | 2 | 4 | | | | | | | | |
| 7 | Q151336 | Tornillo soporte guias | | 4 | 8 | | | | | | | | |
| 8 | U135635 | Parrilla de horno | | 1 | 2 | | | | | | | | |
| 9 | U745630 | Cabeza de placa de horno | | 1 | 2 | | | | | | | | |
| 10 | U745631 | Placa de horno | | 1 | 2 | | | | | | | | |
| 11 | Q151401 | Tornillo alomado | | 2 | 4 | | | | | | | | |
| 12 | U325618 | Tapa salida humos | | 1 | 2 | | | | | | | | |
| 13 | U742610 | Protector quemador horno | | 1 | 2 | | | | | | | | |
| 14 | U745610 | Aislante vitrofib 390x70x20 | | 1 | 2 | | | | | | | | |
| 15 | U745626 | Junta puerta horno | | 1 | 2 | | | | | | | | |
| 16 | U325621 | Aislante vitrofib 1455x670x20 | | 1 | 2 | | | | | | | | |
| 17 | U745613 | Camara conduccion de humos | | 1 | 2 | | | | | | | | |
| 18 | Q419005 | Remache tubular Ø 4x8 | | 17 | 34 | | | | | | | | |
| 19 | U745620 | Cuerpo de horno | | 1 | 2 | | | | | | | | |
| 20 | - | Alambre amarre aislante | | 2 | 4 | | | | | | | | |
| 21 | R660530 | Aislante vitrofib 680x95x20 | | 2 | 4 | | | | | | | | |
| 22 | Q081365 | Tornillo alomado 4,8x19 | | 2 | 4 | | | | | | | | |
| 23 | Q419005 | Remache tubular Ø 4x8 | | 6 | 12 | | | | | | | | |
| 24 | T985607 | Anterior de chimenea | | 1 | 2 | | | | | | | | |
| 25 | T985608 | Posterior de chimenea | | 1 | 2 | | | | | | | | |
| 26 | T985600 | Refuerzo cubierta | | 1 | 2 | | | | | | | | |
| 27 | Q221342 | Remache exagonal M-5 | | 2 | 4 | | | | | | | | |
| 28 | Q152004 | Tornillo aplastado M-5x13 | | 2 | 4 | | | | | | | | |
| 29 | U055644 | Conjunto fijacion bulbo | | 1 | 2 | | | | | | | | |

| MOD. | HORNOS | ZONA | HORNO GAS | PLANO | C-763 |
|---|---|---|---|---|---|

| ITEM | CODIGO | DENOMINACION | TEXTO | HG9-10 | HG9-20 | | | | | | | | NOTAS |
|---|---|---|---|---|---|---|---|---|---|---|---|---|---|
| 30 | Q151401 | Tornillo alomado | | 2 | 4 | | | | | | | | |
| 31 | U565608 | Base de horno | | 1 | 2 | | | | | | | | |
| 32 | 0623600 | Palanca levanta-placas | | 1 | 2 | | | | | | | | |
| | | | | | | | | | | | | | |
| | | | | | | | | | | | | | |
| | | | | |

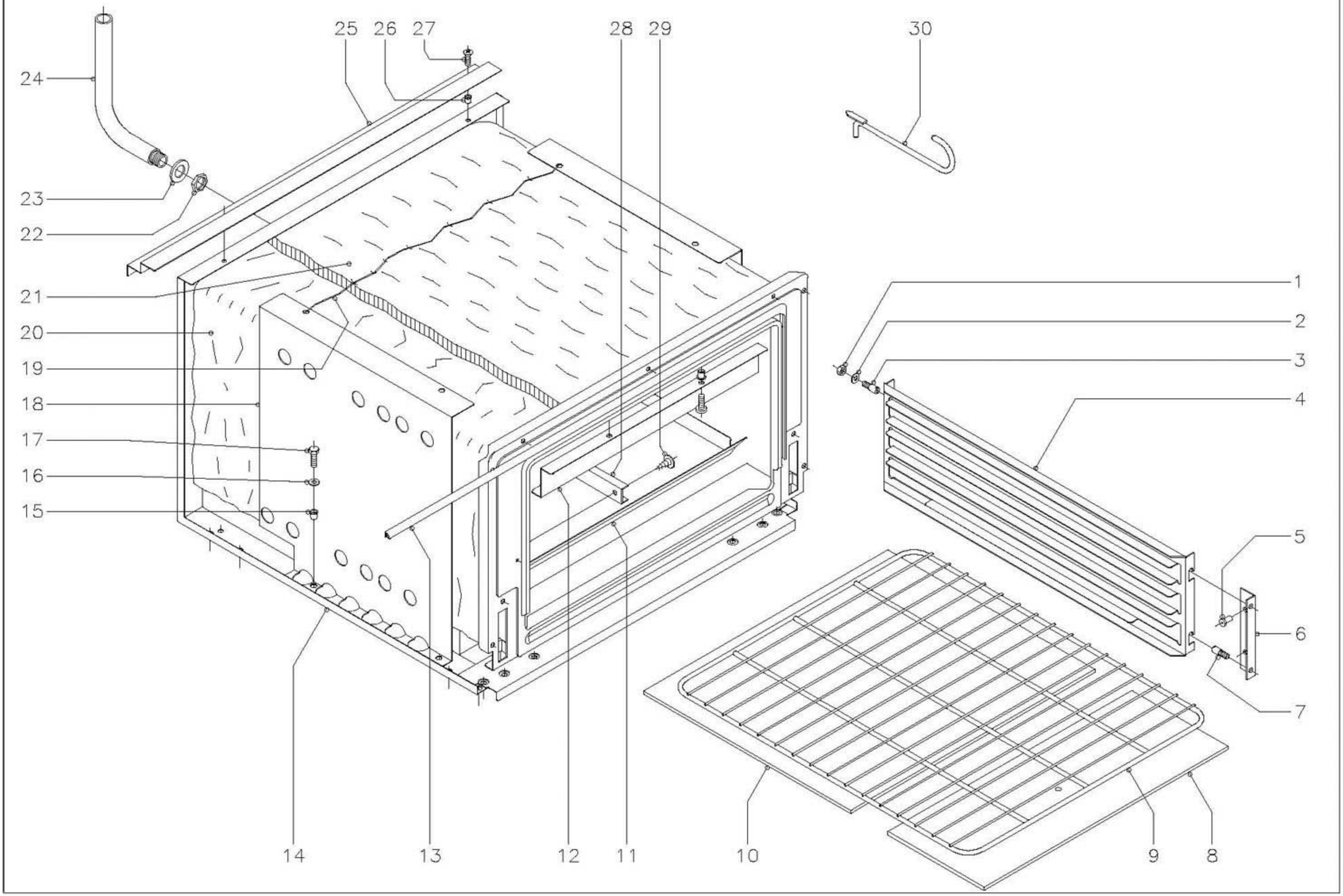


| N plano | Firma | Fecha | Aparato | Lamina | |
|---|---|---|---|---|---|
| C-764 | | 12-99 | HORNO HE9-10 Y 20 | 3 | Fagor Industrial S.Coop. FAGOR<br>0<ate |

| MOD. | HORNOS | ZONA | HORNO ELECTRICO | PLANO | C-764 |
|---|---|---|---|---|---|

| ITEM | CODIGO | DENOMINACION | TEXTO | HE9-10 | HE9-20 | | | | | | | | NOTAS |
|---|---|---|---|---|---|---|---|---|---|---|---|---|---|
| 1 | Q162040 | Tuerca exagonal M-6 | | 4 | 8 | | | | | | | | |
| 2 | Q302022 | Arandela plana Ø 16xØ 6x1,2 | | 4 | 8 | | | | | | | | |
| 3 | Q151336 | Tornillo soporte guias | | 4 | 8 | | | | | | | | |
| 4 | U325608 | Guia de bandejas | | 2 | 4 | | | | | | | | |
| 5 | Q419005 | Remache tubular Ø 4x8 | | 4 | 8 | | | | | | | | |
| 6 | U325611 | Escuadra soporte guia bandejas | | 2 | 4 | | | | | | | | |
| 7 | Q151336 | Tornillo soporte guias | | 4 | 8 | | | | | | | | |
| 8 | U745630 | Cabeza placa de horno | | 1 | 2 | | | | | | | | |
| 9 | U135635 | Parrilla de horno | | 1 | 2 | | | | | | | | |
| 10 | U745631 | Placa de horno | | 1 | 2 | | | | | | | | |
| 11 | U805606 | Base de horno | | 1 | 2 | | | | | | | | |
| | Q152004 | Tornillo aplastado M-5x13 | | 4 | 8 | | | | | | | | |
| 12 | U805609 | Amarre soporte superior | | 1 | 2 | | | | | | | | |
| | Q221304 | Remache redondo M-5 | | 2 | 4 | | | | | | | | |
| | Q152004 | Tornillo aplastado M-5x13 | | 2 | 4 | | | | | | | | |
| 13 | U745626 | Junta puerta horno | | 1 | 2 | | | | | | | | |
| 14 | U805600 | Cuerpo de horno | | 1 | 2 | | | | | | | | |
| 15 | Q221304 | Remache redondo M-5 | | 4 | 8 | | | | | | | | |
| 16 | Q302022 | Arandela plana Ø 16xØ 6x1,2 | | 4 | 8 | | | | | | | | |
| 17 | Q012031 | Tornillo exagonal M-5x10 | | 4 | 8 | | | | | | | | |
| 18 | U802601 | Sujecion aislante | | 2 | 4 | | | | | | | | |
| 19 | - | Alambre sujecion aislante | | 2 | 4 | | | | | | | | |
| 20 | U325621 | Aislante vitrofib 1455x670x20 | | 1 | 2 | | | | | | | | |
| 21 | U805605 | Aislante vitrofib 670x560x20 | | 1 | 2 | | | | | | | | |
| 22 | Q221302 | Tuerca exagonal 1/2" | | 1 | 2 | | | | | | | | |
| 23 | Q231311 | Arandela plana A-21 | | 1 | 2 | | | | | | | | |
| 24 | U675607 | Tubo extractor vapores | | 1 | 2 | | | | | | | | |
| 25 | T985600 | Refuerzo cubierta | | 1 | 2 | | | | | | | | |
| 26 | Q221304 | Remache redondo M-5 | | 2 | 4 | | | | | | | | |

| MOD. | HORNOS | ZONA | HORNO ELECTRICO | PLANO | C-764 |
|---|---|---|---|---|---|

| ITEM | CODIGO | DENOMINACION | TEXTO | HE9-10 | HE9-20 | | | | | | | | NOTAS |
|---|---|---|---|---|---|---|---|---|---|---|---|---|---|
| 27 | Q152004 | Tornillo aplastado M-5x13 | | 2 | 4 | | | | | | | | |
| 28 | U055644 | Conjunto fijacion bulbo | | 1 | 2 | | | | | | | | |
| 29 | Q151401 | Tornillo alomado | | 2 | 4 | | | | | | | | |
| 30 | 0623600 | Palanca levanta-placas | | 1 | 2 | | | | | | | | |

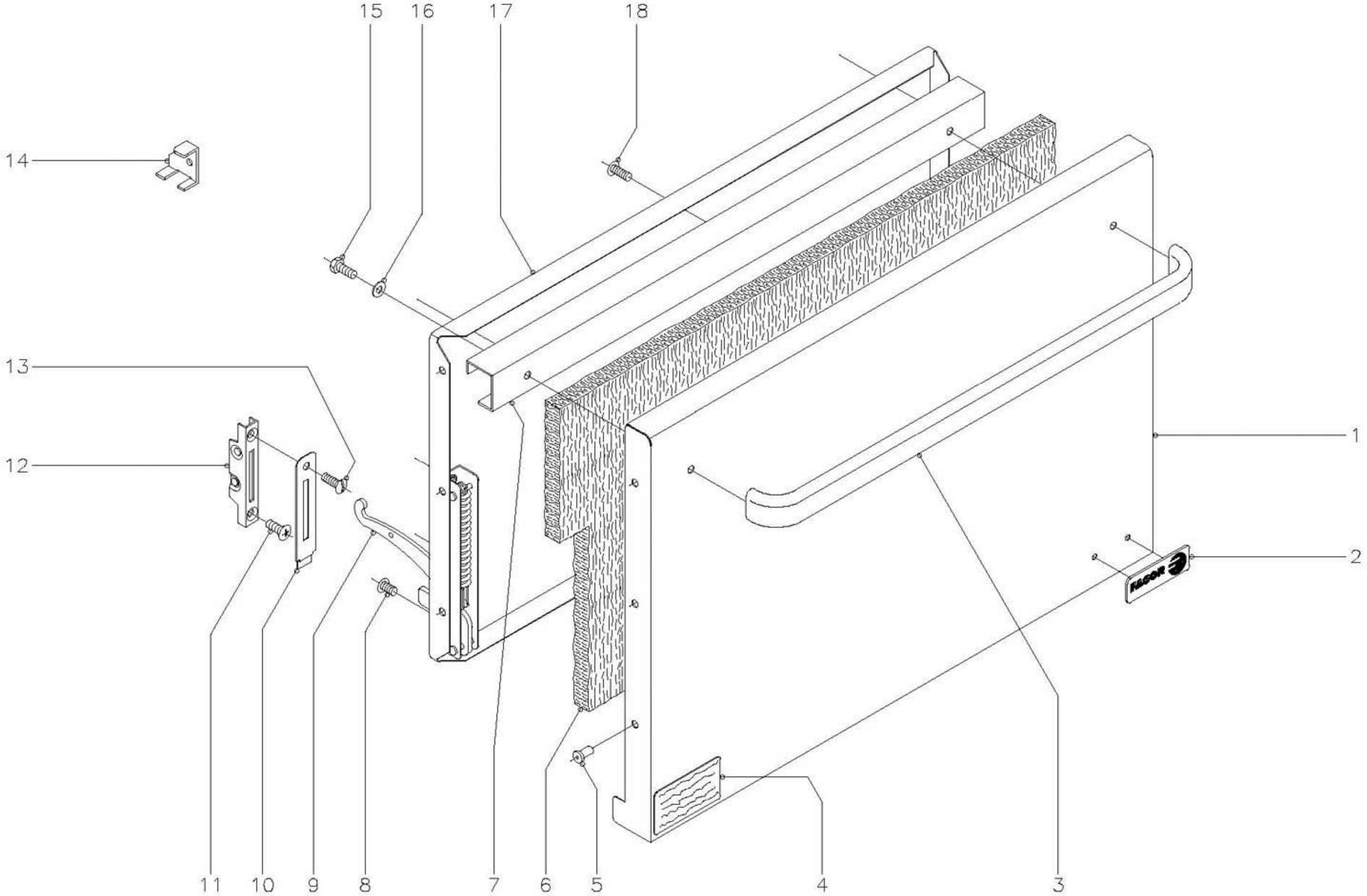


| N plano | Firma | Fecha | Aparato | Lamina | |
|---|---|---|---|---|---|
| C-765 | | 12-99 | HORNOS HG9-10 Y 20<br>HORNOS HE9-10 Y 20 | 4 | Fagor Industrial S.Coop.<br>O<ate |

| MOD. | HORNOS | ZONA | PUERTA HORNO | PLANO | C-765 |
|---|---|---|---|---|---|

| ITEM | CODIGO | DENOMINACION | TEXTO | HG9-10 | HG9-20 | HE9-10 | HE9-20 | | | | | | NOTAS |
|---|---|---|---|---|---|---|---|---|---|---|---|---|---|
| 1 | U740501 | Puerta de horno | | 1 | 2 | 1 | 2 | | | | | | |
| 2 | U262806 | Escudo FAGOR | | 1 | 2 | 1 | 2 | | | | | | |
| | Q221023 | Clips sujecion escudo | | 2 | 4 | 2 | 4 | | | | | | |
| 3 | U580520 | Asa de puerta | | 1 | 2 | 1 | 2 | | | | | | |
| 4 | S326530 | Placa matricula | | 1 | 2 | - | - | | | | | | |
| 4 | Z206121 | Placa matricula | | - | - | 1 | 2 | | | | | | |
| 5 | Q419005 | Remache tubular Ø 4x8 | | 6 | 12 | 6 | 12 | | | | | | |
| 6 | U260502 | Aislante vitrofib 680x380x20 | | 1 | 2 | 1 | 2 | | | | | | |
| 7 | U320507 | Refuerzo de puerta | | 1 | 2 | 1 | 2 | | | | | | |
| 8 | Q152022 | Tornillo amarre M-6x8 | | 6 | 12 | 6 | 12 | | | | | | |
| 9 | U010511 | Bisagra izquierda | | 1 | 2 | 1 | 2 | | | | | | |
| s/n | U010504 | Bisagra derecha | | 1 | 2 | 1 | 2 | | | | | | |
| 10 | U010510 | Enbellecedor guia bisagra | | 2 | 4 | 2 | 4 | | | | | | |
| 11 | Q042043 | Tornillo avellanado M-6x20 | | 2 | 4 | 2 | 4 | | | | | | |
| 12 | U010512 | Guia de bisagra | | 2 | 4 | 2 | 4 | | | | | | |
| 13 | Q152017 | Tornillo amarre M-6x13 | | 2 | 4 | 2 | 4 | | | | | | |
| 14 | U746501 | Escuadra montaje puerta | | 2 | 4 | 2 | 4 | | | | | | |
| 15 | Q012041 | Tornillo exagonal M-6x10 | | 2 | 4 | 2 | 4 | | | | | | |
| 16 | Q302022 | Arandela plana Ø 16xØ 6x1,2 | | 2 | 4 | 2 | 4 | | | | | | |
| 17 | U260501 | Contrapuerta de horno | | 1 | 2 | 1 | 2 | | | | | | |
| 18 | Q152017 | Tornillo amarre M-6x13 | | 3 | 6 | 3 | 6 | | | | | | |
| | | | | | | | | | | | | | |
| | | | | | | | | | | | | | |
| | | | | | | | | | | | | | |
| | | | | | | | | | | | | | |
| | | | | | | | | | | | | | |
| | | | | | | | | | | | | | |
| | | | | | | | | | | | | | |
| | | | | | | | | | | | | | |

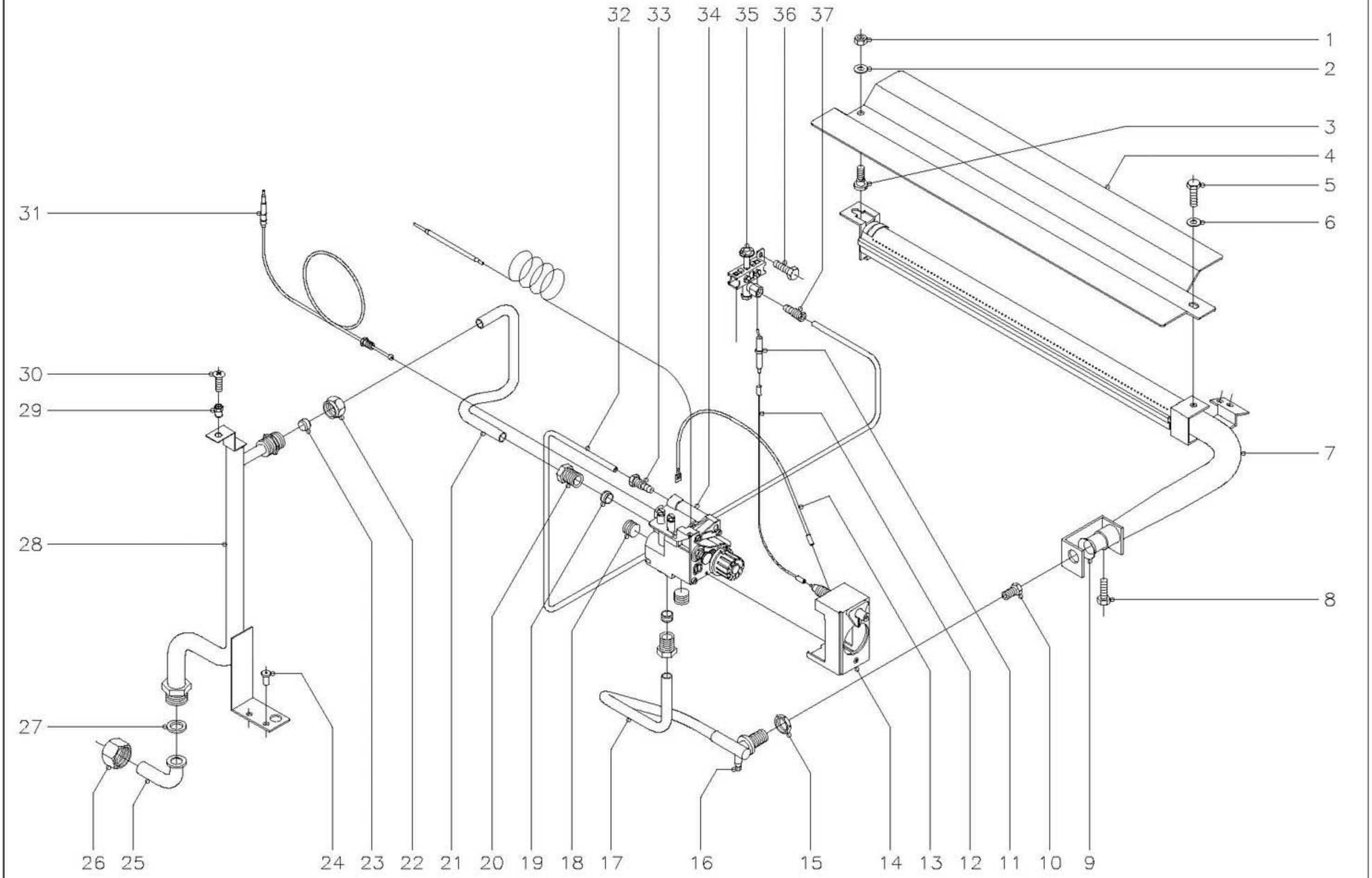


| N plano | Firma | Fecha | Aparato | Lamina | |
|---|---|---|---|---|---|
| C-766 | | 12-99 | HORNOS HG9-10 Y 20 | 5 | Fagor Industrial S.Coop. FAGOR<br>Oate |

| MOD. | HORNOS | ZONA | PARTE FUNCIONAL GAS | PLANO | C-766 |
|---|---|---|---|---|---|

| ITEM | CODIGO | DENOMINACION | TEXTO | HG9-10 | HG9-20 | | | | | | | | NOTAS |
|---|---|---|---|---|---|---|---|---|---|---|---|---|---|
| 1 | Q162040 | Tuerca exagonal M-6 | | 1 | 2 | | | | | | | | |
| 2 | Q302022 | Arandela plana Ø 16xØ 6x1,2 | | 1 | 2 | | | | | | | | |
| 3 | R252624 | Piton soporte | | 1 | 2 | | | | | | | | |
| 4 | U745705 | Difusor quemador horno | | 1 | 2 | | | | | | | | |
| 5 | Q012041 | Tornillo exagonal M-6x10 | | 1 | 2 | | | | | | | | |
| 6 | Q302022 | Arandela plana Ø 16xØ 6x1,2 | | 1 | 2 | | | | | | | | |
| 7 | U745700 | Quemador horno | | 1 | 2 | | | | | | | | |
| 8 | Q012031 | Tornillo exagonal M-5x10 | | 1 | 2 | | | | | | | | |
| 9 | U325707 | Regulador de aire | | 1 | 2 | | | | | | | | |
| 10 | U052401 | Tobera Ø 1,45 ( Butano-Propano ) | | 1 | 2 | | | | | | | | |
| 10 | 9101160 | Tobera Ø 2,25 ( Gas natural ) | | 1 | 2 | | | | | | | | |
| 10 | 9424600 | Tobera Ø 4,23 ( Gas villa ) | | 1 | 2 | | | | | | | | |
| 11 | X012101 | Bujia de encendido | | 1 | 2 | | | | | | | | |
| 12 | U323030 | Cable bujia a piezoelectrico | | 1 | 2 | | | | | | | | |
| 13 | U333003 | Cable masa a piezoelectrico | | 1 | 2 | | | | | | | | |
| 14 | T982101 | Tapa con piezoelectrico y tornillo | | 1 | 2 | | | | | | | | |
| 15 | Q223019 | Tuerca exagonal 3/8" | | 1 | 2 | | | | | | | | |
| 16 | Q153002 | Tornillo toma presion | | 1 | 2 | | | | | | | | |
| 17 | T985006 | Tubo valvula a quemador | | 1 | 2 | | | | | | | | |
| 18 | T982102 | Tapon 3/8" | | 2 | 4 | | | | | | | | |
| 19 | U055043 | Bicono Ø 12 | | 2 | 4 | | | | | | | | |
| 20 | U264310 | Manguito 3/8" | | 2 | 4 | | | | | | | | |
| 21 | T985005 | Tubo entrada a valvula | | 1 | 2 | | | | | | | | |
| 22 | Q221334 | Tuerca 1/2" | | 1 | 2 | | | | | | | | |
| 23 | U055043 | Bicono Ø 12 | | 1 | 2 | | | | | | | | |
| 24 | Q411304 | Remache avibulb Ø 4,8 | | 2 | 4 | | | | | | | | |
| 25 | U565007 | Codo entrada gas | | 1 | 2 | | | | | | | | |
| 26 | U725006 | Tuerca 3/4" | | 1 | 2 | | | | | | | | |
| 27 | Q306052 | Arandela junta Ø 23xØ 15x2,5 | | 1 | 2 | | | | | | | | |

| MOD. | HORNOS | ZONA | PARTE FUNCIONAL GAS | PLANO | C-766 |
|---|---|---|---|---|---|

| ITEM | CODIGO | DENOMINACION | TEXTO | HG9-10 | HG9-20 | | | | | | | | NOTAS |
|---|---|---|---|---|---|---|---|---|---|---|---|---|---|
| 28 | T985010 | Tubo de entrada gas | | 1 | 2 | | | | | | | | |
| 29 | Q221342 | Remache exagonal M-5 | | 1 | 2 | | | | | | | | |
| 30 | Q152004 | Tornillo aplastado M-5x13 | | 1 | 2 | | | | | | | | |
| 31 | U562130 | Termopar L=850 | | 1 | 2 | | | | | | | | |
| 32 | T985008 | Tubo piloto horno | | 1 | 2 | | | | | | | | |
| 33 | U134323 | Racord con bicono Ø 6 | | 1 | 2 | | | | | | | | |
| 34 | T982100 | Valvula 630 eurosit | | 1 | 2 | | | | | | | | |
| 35 | U322118 | Piloto completo | | 1 | 2 | | | | | | | | |
| 36 | Q012031 | Tornillo exagonal M-5x10 | | 2 | 4 | | | | | | | | |
| 37 | U134323 | Racord con bicono Ø 6 | | 1 | 2 | | | | | | | | |

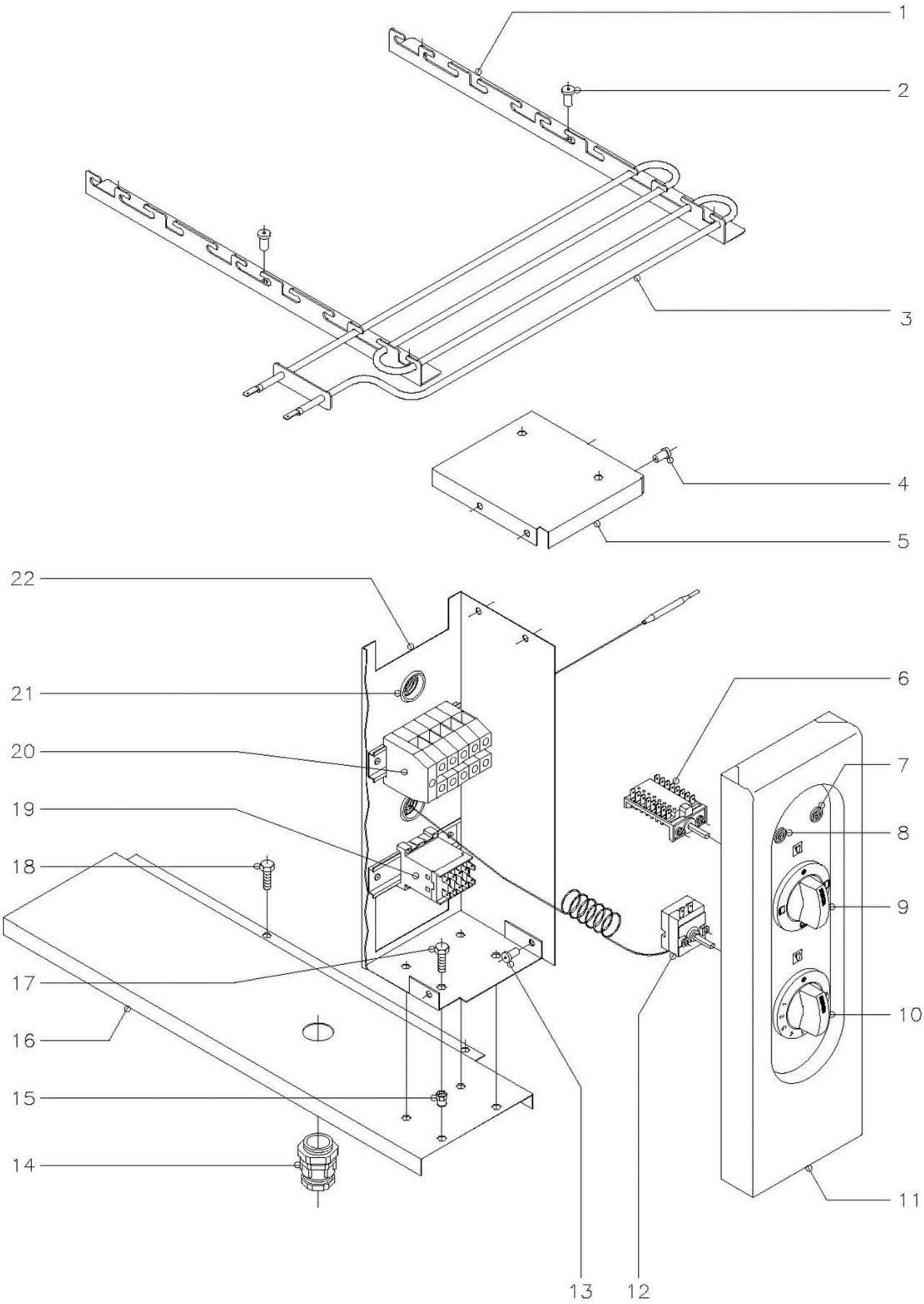


| N plano | Firma | Fecha | Aparato | Lamina | |
|---|---|---|---|---|---|
| C–767 | | 12–99 | HORNOS HE9–10 Y 20 | 6 | Fagor Industrial S.Coop. FAGOR<br>Oñate |

| MOD. | HORNOS | ZONA | PARTE FUNCIONAL ELECTRICA | PLANO | C-767 |
|---|---|---|---|---|---|

| ITEM | CODIGO | DENOMINACION | TEXTO | HE9-10 | HE9-20 | | | | | | | | NOTAS |
|---|---|---|---|---|---|---|---|---|---|---|---|---|---|
| 1 | U805613 | Escuadra soporte resistencias | | 4 | 8 | | | | | | | | |
| 2 | Q419005 | Remache tubular Ø 4x8 | | 12 | 24 | | | | | | | | |
| 3 | U803004 | Resistencia 1000 W. , 230 V. | | 6 | 12 | | | | | | | | |
| 4 | Q419005 | Remache tubular Ø 4x8 | | 4 | 8 | | | | | | | | |
| 5 | U673051 | Tapa de cuadro electrico | | 1 | 2 | | | | | | | | |
| 6 | U673006 | Conmutador | | 1 | 2 | | | | | | | | |
| 7 | Z203005 | Piloto ambar | | 1 | 2 | | | | | | | | |
| 8 | Z203004 | Piloto verde | | 1 | 2 | | | | | | | | |
| 9 | U673004 | Boton de mando Ø 6 | | 1 | 2 | | | | | | | | |
| 10 | U673005 | Boton de mando Ø 6 | | 1 | 2 | | | | | | | | |
| 11 | U672852 | Portamandos lateral | | 1 | 2 | | | | | | | | |
| 12 | X153000 | Termostato 50-310º C. | | 1 | 2 | | | | | | | | |
| 13 | Q419005 | Remache tubular Ø 4x8 | | 2 | 4 | | | | | | | | |
| 14 | R023013 | Prensaestopas | | 1 | 2 | | | | | | | | |
| 15 | Q221342 | Remache exagonal M-5 | | 4 | 8 | | | | | | | | |
| 16 | U672650 | Proteccion inferior resistencias | | 1 | 2 | | | | | | | | |
| 17 | Q012031 | Tornillo exagonal M-5x10 | | 4 | 8 | | | | | | | | |
| 18 | Q012031 | Tornillo exagonal M-5x10 | | 2 | 4 | | | | | | | | |
| 19 | Z213007 | Contactor 230 V. , 50/60 Hz. | | 1 | 2 | | | | | | | | |
| | R663055 | Guia contactor L=120 | | 1 | 2 | | | | | | | | |
| 20 | P453025 | Borna gris de 10 ( fases ) | | 3 | 6 | | | | | | | | |
| | U803009 | Borna azul de 10 ( neutro ) | | 1 | 2 | | | | | | | | |
| | P453026 | Borna amarillo-verde de 10 ( tierra ) | | 1 | 2 | | | | | | | | |
| | Z263303 | Tope final | | 1 | 2 | | | | | | | | |
| | R663055 | Guia contactor L=120 | | 1 | 2 | | | | | | | | |
| 21 | X723014 | Pasamuros Ø 30 | | 2 | 4 | | | | | | | | |
| 22 | T963000 | Cuadro electrico | | 1 | 2 | | | | | | | | |
| | | | | | | | | | | | | | |
| | | | | | | | | | | | | | |

| MOD. | HORNOS | ZONA | VARIOS | PLANO | - |
|---|---|---|---|---|---|

| ITEM | CODIGO | DENOMINACION | TEXTO | HG9-10 | HG9-20 | HE9-10 | HE9-20 | | | | | | NOTAS |
|---|---|---|---|---|---|---|---|---|---|---|---|---|---|
| | T986500 | Folleto de instrucciones | | 1 | 1 | - | - | | | | | | |
| | U676550 | Folleto de instrucciones | | - | - | 1 | 1 | | | | | | |
| | U673001 | Esquema electrico adhesivo | | - | - | 1 | 1 | | | | | | ( Plano HC-71190 ) |
| | U673053 | Esquema electrico de montaje | | - | - | 1 | 1 | | | | | | ( Plano HC-73750 ) |
| | U673008 | Cableado de horno | | - | - | 1 | 2 | | | | | | |
| | | | | | | | | | | | | | |
| | | | | | | | | | | | | | |
| | | | | | | |

| MOD. | HORNOS | ZONA | PIEZAS ESPECIFICAS PARA LOS DISTINTOS GASES | PLANO | C-766 |
|---|---|---|---|---|---|

| ITEM | CODIGO | DENOMINACION | TEXTO | HG9-10 | HG9-20 | | | | | | | | NOTAS |
|---|---|---|---|---|---|---|---|---|---|---|---|---|---|
| | | | | | | | | | | | | | |
| | | **BUTANO-PROPANO** | | | | | | | | | | | |
| | | | | | | | | | | | | | |
| 10 | U052401 | Tobera Ø 1,45 | | 1 | 2 | | | | | | | | |
| | U136501 | Indicador ( Butano-Propano ) | | 1 | 2 | | | | | | | | |
| | | | | | | | | | | | | | |
| | | | | | | | | | | | | | |
| | | | | | | | | | | | | | |
| | | | | | | | | | | | | | |
| | | **GAS NATURAL** | | | | | | | | | | | |
| | | | | | | | | | | | | | |
| 10 | 9101160 | Tobera Ø 2,25 | | 1 | 2 | | | | | | | | |
| | U134402 | Indicador ( Gas natural ) | | 1 | 2 | | | | | | | | |
| | | | | | | | | | | | | | |
| | | | | | | | | | | | | | |
| | | | | | | | | | | | | | |
| | | | | | | | | | | | | | |
| | | | | | | | | | | | | | |
| | | **GAS VILLA** | | | | | | | | | | | |
| | | | | | | | | | | | | | |
| 10 | 9424600 | Tobera Ø 4,23 | | 1 | 2 | | | | | | | | |
| | U134310 | Indicador ( Gas villa ) | | 1 | 2 | | | | | | | | |
| | | | | | | | | | | | | | |
| | | | | | | | | | | | | | |
| | | | | | | | | | | | | | |
| | | | | | | | | | | | | | |
| | | | | | | | | | | | | | |
| | | | | | | | | | | | | | |
| | | | | | | | | | | | | | |

NOTAS

- Fondo: color natural
- Inscripcion letra y recuadro en color negro.
- El sello sera autoadhesivo por la cara posterior y recubierto por un papel protector.
- Las inscripciones resistiran sin modificacion apreciable el frotamiento durante 15 seg. de un algodon impregnado en gasolina.
- Medidas 127x225mm.
- Material:Papel blanco alto brillo

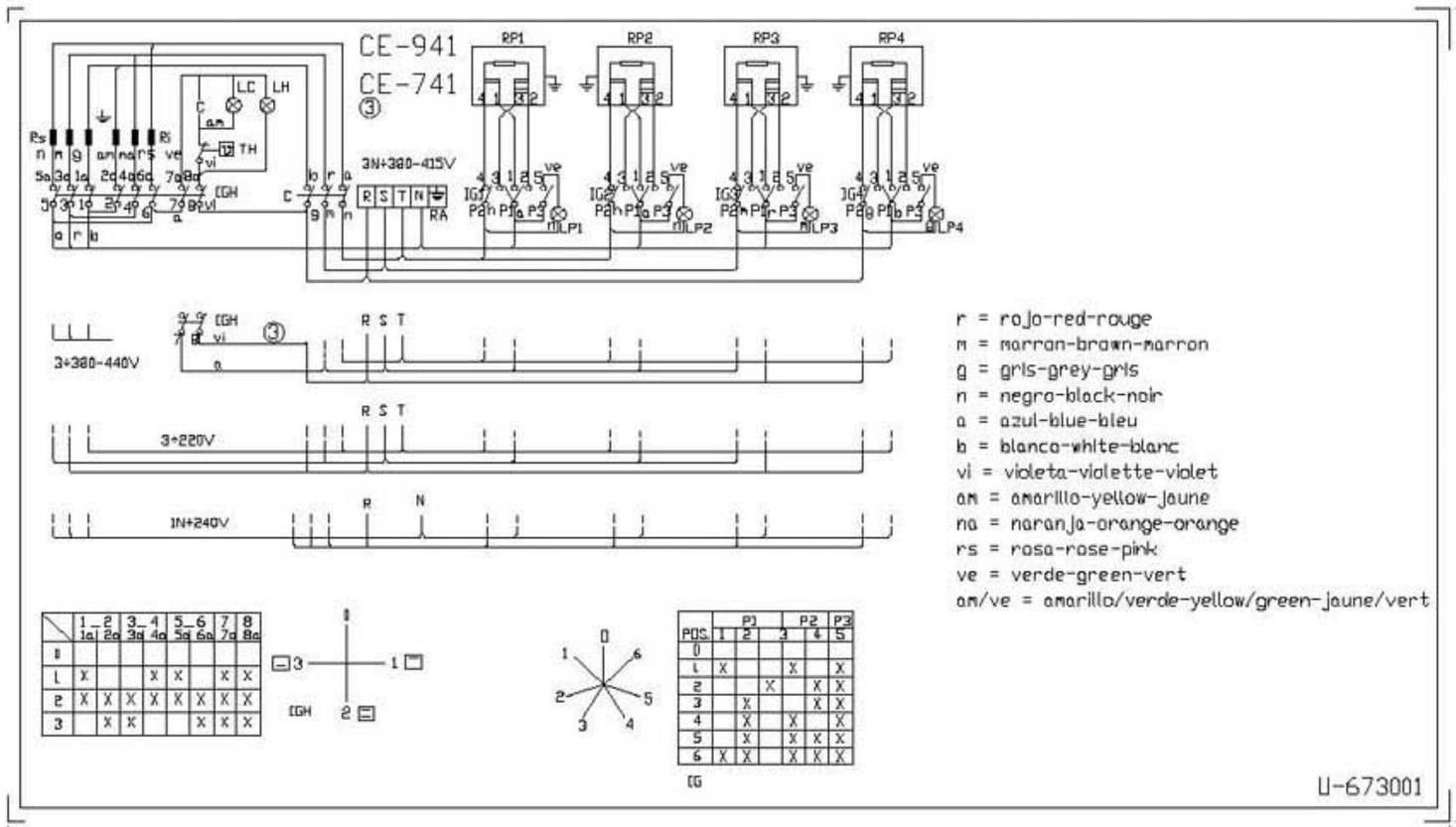


RA:Regleta de Alimentacion
IGH :Conmutador General Horno
C: Contactor
LC : Lampara Calentamiento Horno
LH: Lampara Horno Encendido
TH : Termostato de Horno
Rs : Resistencia Horno Superior
Ri : Resistencia Horno Inferior
IG,IG2,IG3,IG4 :Conmutadores de placas electricas
RP1,RP2,RP3,RP4:Placas electricas
LP1,LP2,LP3,LP4:Lampara Calentamiento de Placas
TFR:Transformador

| | | | | | | |
|---|---|---|---|---|---|---|
| | Esquema teorico adhesivo | | | U-673001 | 4 | |
| Nº | Pieza | Cant. | Material | Nº Clasificacion | Acabado | |
| Nº | Modificacion | | Propuesta de | Fecha | Tolerancias generales | |
| ① | Introducir colores | | Maillo | 95-5-18 | | |
| ② | Modifi.general(pasar a fabri.interior) | | Plazaola | 97-4-29 | < 5 ± / 5÷25 / 25÷50 | 50÷100 / > 100 / ∝ 1 |
| ③ | Introducir CE-741 | | Maillo | 97-7-2 | | |
| | Firma | Fecha | FAGOR | | Mecanizado superficial | |
| Dibujado | JDN | 95-3-30 | | | | |
| Proyectado | | | | | | |
| Comprobado | | | Fagor Industrial,Koop.Elk, Mugatua | | | |
| Escala 1/1 | COCINAS | | | | Plano numero HC-71190 -3 | |
| | Plano hau ez dalteke erabili ez berrizta gure baimenitz gabe | | | | Sustituye al Nº | |
| | | | | | Sustituido por | |

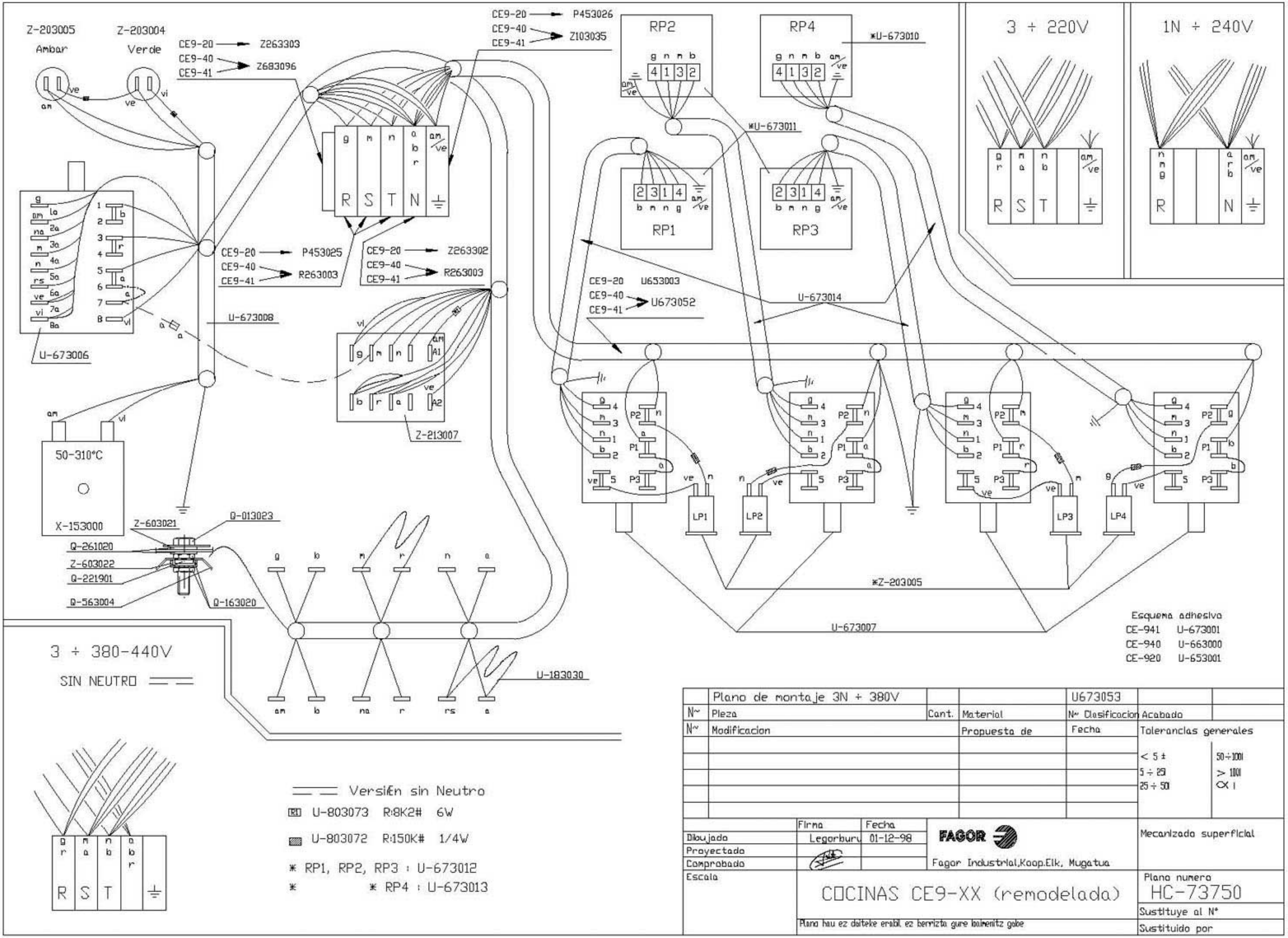


| | | | | | | |
|---|---|---|---|---|---|---|
| | Plano de montaje 3N ÷ 380V | | | U673053 | | |
| N~ | Pieza | Cant. | Material | N~ Clasificacion | Acabado | |
| N~ | Modificacion | | Propuesta de | Fecha | Tolerancias generales | |
| | | | | | < 5 ± | 50÷100 |
| | | | | | 5 ÷ 25 | > 100 |
| | | | | | 25 ÷ 50 | ∝ 1 |
| | | | | | | |
| | | | | | | |

| | Firma | Fecha | | |
|---|---|---|---|---|
| Dibujado | Legorburu | 01-12-98 | FAGOR | Mecanizado superficial |
| Proyectado | | | | |
| Comprobado | | | Fagor Industrial,Koop.Elk, Mugatua | |
| Escala | COCINAS CE9-XX (remodelada) | | | Plano numero HC-73750 |
| | Plano hau ez daiteke erabil ez berrizta gure baimenitz gabe | | | Sustituye al N° |
| | | | | Sustituido por |