DESPIECE TECNICO / SPARE PARTS BOM

Hornos eléctricos
Fours électriques
Electric ovens
Elecktro heissluftdämpfer
Forni elettrici
Fornos eletricos

Modelos / Models:

AE-202
ACE-202
APE-202

Julio 2012 July
Revisado Julio 2015 July Revised

FAGOR

FAGOR INDUSTRIAL

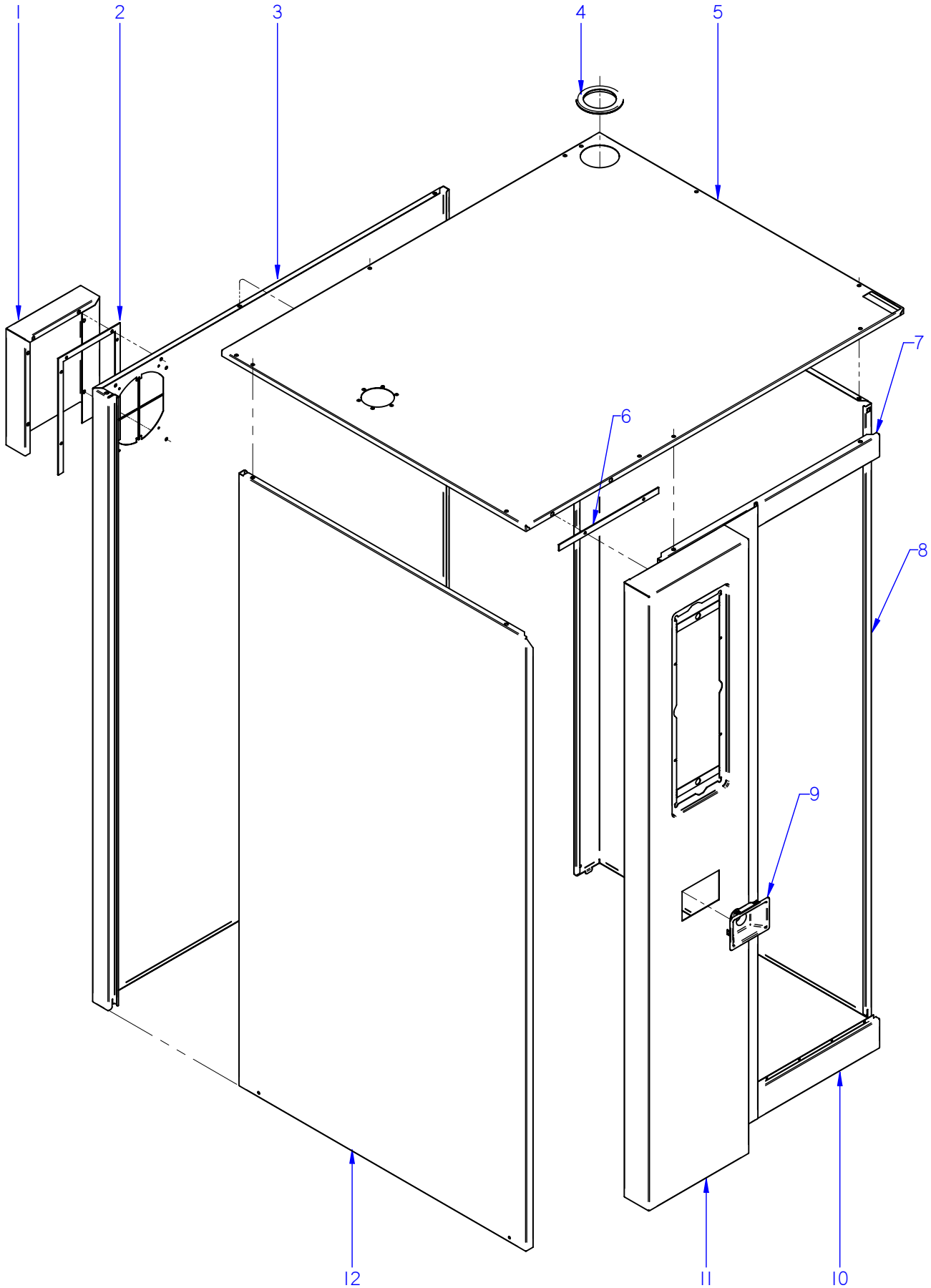

ITEM MARCADO EN COLOR = REPUESTO RECOMENDADO
COLOURED ITEM = RECOMMENDED SPARE PART

Nº plano / N º plane	Firma	Fecha / Date	Denominación / Denomination: MUEBLE / UNIT	Lamina / Sheet	
C-3034		2012-07	HORNOS AE; ACE; APE-202	1	Fagor Industrial S.Coop. FAGOR Oñate

MOD.	HORNOS / OVEN	ZONA / ZONE	MUEBLE / UNIT	PLANO DIAGRAM	C-3034

ITEM	CODIGO REFERENCE	DENOMINACION	DENOMINATION	ACE-202	AE-202	APE-202						ELIMINADO ELIMINATED	INTRODUCID. INTRODUCED	NOTAS
1	12022556	CHAPA SEPARACION IPX5 20-21	SEPARATION PLATE IPX5 20-21	1	1	1						01.11.12		
1	12022557	CHAPA SEPARACI. IPX5 20 SOLD.	SEPARAT. PLATE IPX5 20 WEL.	1	1	1							01.11.12	
	12010163	REMACHE EXAGONAL M.5	HEXAGONAL RIVET M.5	12	12	12								
2	12024081	JUNTA IPX5 20-21	SEAL IPX5 20-21	1	1	1								
	12009944	ARANDELA A5	FLAT WASHER A.5	6	6	6								
	12009890	ARANDELA ABANICO A5 A.304	FAN SHAPED WASHER A.5	6	6	6								
	12010238	TORNILLO EXAGONAL M5X10	HEXAGONAL BOLT M5X10	6	6	6								
3	12039348	PANEL POSTERIOR 202	REAR PANEL 202	1	1	1								
4	12039366	PASAMUROS Ø73	THROUGH Ø73	2	2	2								
	12010242	TORNIL. APLASTADO M5X13 A 304	FLAT SCREW M.5x13	8	8	8								
5	12043721	PANEL SUPERIOR SOLD. APE 202	TOP PANEL APE 202 SOLDIER	1	1	1								
6	12039370	JUNTA PORTAMANDOS 202	CONTROL PANEL SEAL 202	1	1	1						31.01.14		
7	12039353	PANEL FRONTAL SUPE. 202	UPPER FRONT PANEL 202	1	1	1								
	12010163	REMACHE EXAGONAL M.5	HEXAGONAL RIVET M.5	2	2	2								
	12010065	REMACHE AVINOX Ø3.2X6MM	AVINOX Ø3.2X6MM RIVET	7	7	7								
8	12039347	PANEL EXTERIOR DCHO 202	RIGHT PANEL 202	1	1	1								
9	12041736	EMBELLECEDOR DUCHA AD	SHOWER TRIM AD	_	1	1						31.01.14		
10	12039344	PANEL FRONTAL INFER. 202	LOWER FRONT PANEL 202	_	1	1								
	12010065	REMACHE AVINOX Ø3.2X6MM	AVINOX Ø3.2X6MM RIVET	_	7	7								
11	12043633	PANEL PORTAMANDOS CAE 202	CONTROL PANEL CAE 202	1	_	_						01.10.13		
11	12039418	PORTAMANDOS APG 202	CONTROL PANEL APG 202	1	_	_						02.10.13	01.10.13	
11	12095165	PANEL PORTAMANDOS AC 202	CONTROL PANEL AC 202	1	_	_						01.02.14	02.10.13	
11	12097897	MOD PORTAMANDO 202 ACE	CONTROL PANEL 202 ACE	1	_	_							01.02.14	
11	12043551	PANEL PORTAMANDOS AE 202	CONTROL PANEL AE 202	_	1	_						01.10.13	01.02.14	
11	12039418	PORTAMANDOS APG 202	CONTROL PANEL APG 202	_	1	_						01.02.14	01.10.13	
11	12039418	PORTAMANDOS APG 202	CONTROL PANEL APG 202	_	_	1						01.02.14		
11	12097624	MOD PORTAMANDO 202 ADV PL.	CONTROL PANEL 202 ADV PLUS	_	1	1							01.02.14	
12	12039364	PANEL EXT. IZQUIERDO 202 ADV	REAR LEFT PANEL 202 ADV	1	1	1								
	12010163	REMACHE EXAGONAL M.5	HEXAGONAL RIVET M.5	3	3	3								
	12010242	TORNIL. APLASTADO M5X13 A 304	FLAT SCREW M.5x13	4	4	4								

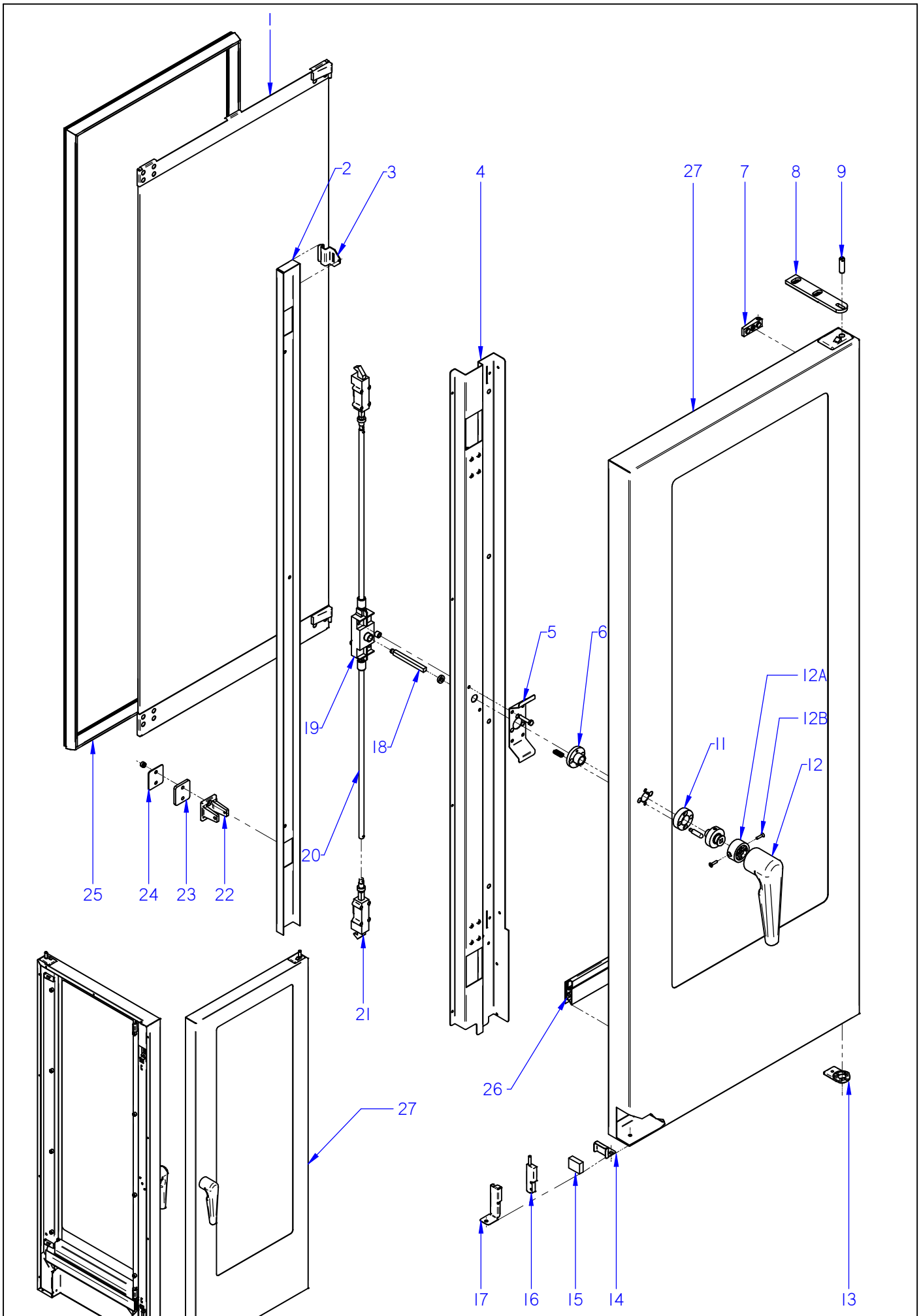

ITEM MARCADO EN COLOR = REPUESTO RECOMENDADO
COLOURED ITEM = RECOMMENDED SPARE PART

Nº plano / N º plane	Firma	Fecha / Date	Denominación / Denomination: PUERTA / DOOR	Lamina / Sheet	
C-3035		2012-07	HORNOS AE; ACE; APE-202	2	Fagor Industrial S.Coop. FAGOR Oñate

MOD.	HORNOS / OVEN	ZONA / ZONE	PUERTA (HASTA 06-2014) / DOOR (UNTIL 06-2014)	PLANO DIAGRAM	C-3035

ITEM	CODIGO REFERENCE	DENOMINACION	DENOMINATION	ACE-202	AE-202	APE-202						ELIMINADO ELIMINATED	INTRODUCID. INTRODUCED	NOTAS
1	**12039272**	**KIT CRISTAL INTER. 202**	**202 INNER GLASS KIT**	**1**	**1**	**1**								
2	12039324	TAPA CIERRE PUERTA 202	DOOR CLOSING COVER 202	1	1	1								
	12010226	TORNILLO ALOMADO.M5X10	CURVED SCREW .M5X10	2	2	2								
	12010278	TORNILLO ALOMADO M4X10	CURVED SCREW M.4x10	2	2	2								
3	12024319	PESTILLO	INNER GLASS HINGE	2	2	2								
4	12039302	CONTRAPUERTA MANILLA 202	COMPLETE HANDLE DOOR 202	1	1	1								
5	12039326	SUPLEMENTO SUJ. CERRADURA	LOCK FIXING SUPPLEMENT	1	1	1								
6	12024389	GUIA MANILLA	HANDLE GUIDE	1	1	1								
	12023608	PITON ENGANCHE PUERTA	DOOR FASTENER SPIKE	2	2	2								
7	12024402	BASE DE BISAGRA	HINGE BASE	2	2	2								
	12010209	TORNILLO AVELLANADO M5X15	COUNTERSUNK SCREW M.5x15	2	2	2								
8	12039312	BISAGRA SUPERIOR	UPPER HINGE	1	1	1								
	12009882	ARANDELA ABANICO A6 A.304	FAN SHAPED WASHER A.6	3	3	3								
	12010106	TORNILLO ALLEN INOX. M6X35MM	ALLEN BOLT STAINLE.M6X35MM	3	3	3								
9	12023636	EJE SUPERIOR	UPPER SHAFT	1	1	1								
	12023631	ARANDELA AMARRE	DOOR ANCHORING WASHER	1	1	1								
	12023716	RESORTE 06329	SPRING 06329	1	1	1								
	12009882	ARANDELA ABANICO A6 A.304	FAN SHAPED WASHER A.6	1	1	1								
	12010186	TORNILLO EXAGONAL M6X15 A304	HEXAGONAL SCREW M6X15	1	1	1								
11	12024505	SOPORTE RESORTE	SPRING HOLDER	1	1	1								
	12024164	RESORTE 34548	SPRING	2	2	2								
	12010213	TORNILLO ALOMADO M5x15	CURVED SCREW M.5x15	2	2	2								
12	12044776	ASA COMPLETA 2/1 ADVANCE	HANDLE 2/1 ADVANCE	1	1	1								
	12010236	VARILLA ROSCADA M6X15	THREADED ROD M.6x15	1	1	1								
12A	12102288	INSERTO AMARRE	FASTENING INSERT	1	1	1							09,06,15	
12B	12010262	TORNILLO AVELLANADO M4X15	COUNTERSUNK SCREW M4x15	2	2	2							09,06,15	
13	12039311	BASE BISAGRA INFERIOR PUERTA	LOWER DOOR HINGE BASE	1	1	1						02.09.13		
13	12047967	BASE BISAGRA INFERIOR 6 DIEN	LOWER HINGE BASE	1	1	1							02.09.13	
	12009944	ARANDELA A5	FLAT WASHER A.5	1	1	1								
14	12022049	SOPORTE IMAN	MAGNET HOLDER	1	1	1								
	12009970	REMACHE EXAGONAL M.5	HEXAGONAL RIVET M.5	1	1	1								

MOD.	HORNOS / OVEN	ZONA / ZONE	PUERTA (HASTA 06-2014) / DOOR (UNTIL 06-2014)	PLANO DIAGRAM	C-3035

ITEM	CODIGO REFERENCE	DENOMINACION	DENOMINATION	ACE-202	AE-202	APE-202						ELIMINADO ELIMINATED	INTRODUCID. INTRODUCED	NOTAS
	12010213	TORNILLO ALOMADO M5X10	CURVED SCREW M5X10	1	1	1								
15	12024384	IMAN	MAGNET	1	1	1								
	12009890	ARANDELA ABANICO A5 A.304	FAN SHAPED WASHER A.5	1	1	1								
	12010242	TORNIL. APLASTADO M5X13 A 304	FLAT SCREW M.5x13	1	1	1								
16	12024560	INTERRUPTOR MAGNETICO AC	MAGNETIC SWITCH AC	1	1	1								
17	12022166	SOPORTE MICRO PUERTA	DOOR MICRO SWITCH	1	1	1								
	12010242	TORNIL. APLASTADO M5X13 A 304	FLAT SCREW M.5x13	1	1	1								
18	12024799	EJE DE MANILLA PUERTA	LEVER SHAFT	1	1	1								
	12024245	CASQUILLO	BUSHING	1	1	1								
19	12024673	MECANISMO CIERRE	CLOSING MECHANISM	1	1	1								
S/Nº	12010292	PASADOR DE ALETAS 2X20	COTTER PIN 2x15	4	4	4								
	12009882	ARANDELA ABANICO A6 A.304	FAN SHAPED WASHER A.6	2	2	2								
	12010255	TORNILLO EXAGONAL M6 INOX.	HEXAGONAL SCREW M6 INOX.	2	2	2								
	12023506	CASQUILLO AMARRE TECLADO	COLLAR	2	2	2								
20	12039308	TUBO ALARGADERA 201/202 ADV	ROD 201/202 ADV	2	2	2								
21	12024657	ELEMENTO CIERRE	CLOSING COMPONENT	2	2	2								
	12009890	ARANDELA ABANICO A5 A.304	FAN SHAPED WASHER A.5	8	8	8								
	12010284	TORNILLO EXAGONAL M5 INOX.	HEXAGONAL SCREW M5 INOX.	8	8	8								
22	12024495	ENGANCHE PUERTA	FASTENER	2	2	2								
23	12024380	SUPLEMENTO ENGANCHE	FASTENER SUPPLEMENT	2	2	2								
24	12022138	CALZO DE ENGANCHE	COUPLING CHOCK	4	4	4								
25	12039298	JUNTA PUERTA 202	DOOR JOINT 202	1	1	1								
26	12039307	JUNTA CIERRE INFERIOR 202	LOWER LOCK JOINT 202	1	1	1								
27	**12046024**	**KIT PUERTA 202**	**DOOR 202 KIT**	**1**	**1**	**1**								

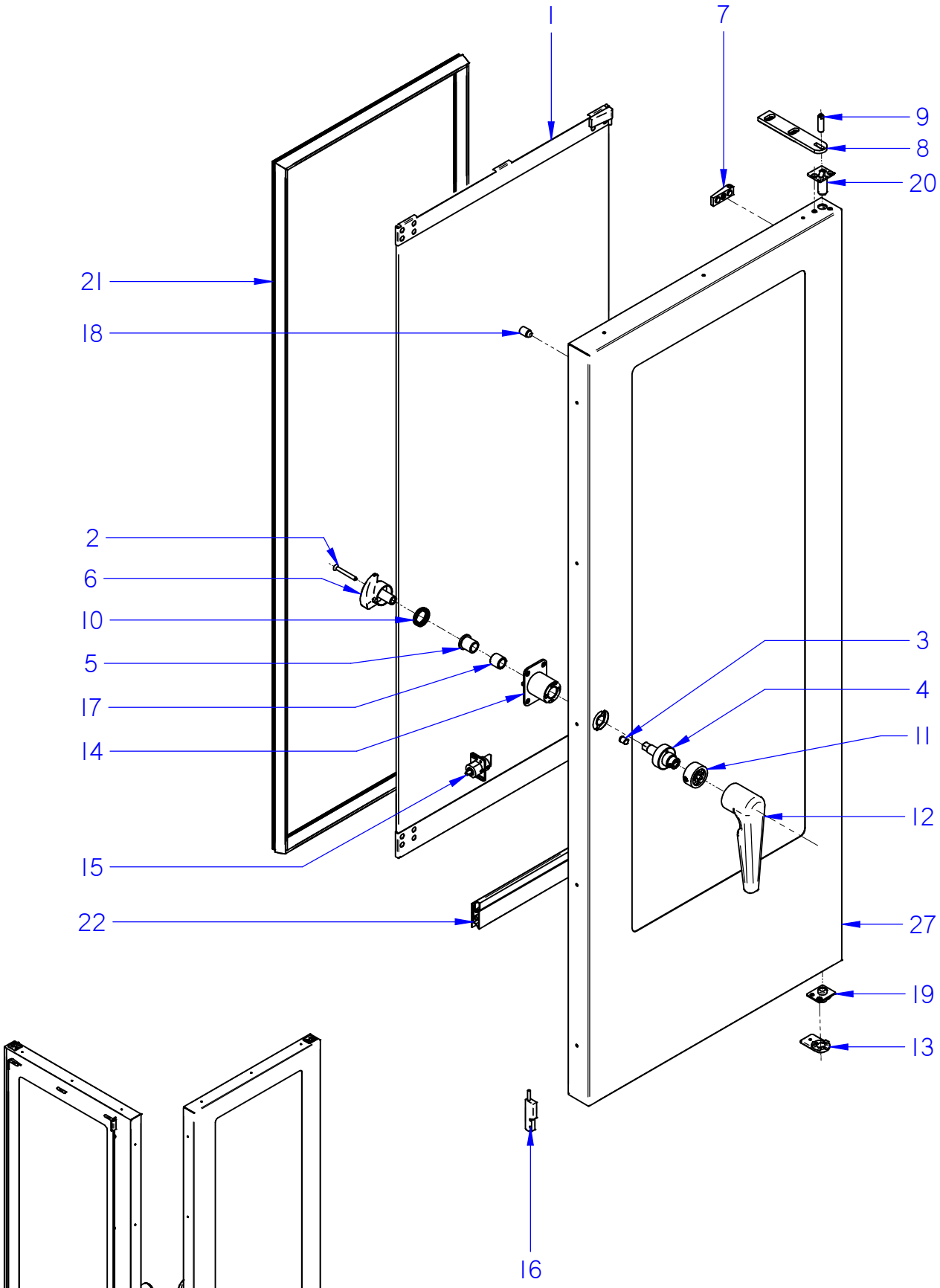

ITEM MARCADO EN COLOR = REPUESTO RECOMENDADO
COLOURED ITEM = RECOMMENDED SPARE PART

Nº plano / Drawing N.	Firma / Signature	Fecha / Date	Denominación / Denomination: PUERTA / DOOR	Lamina / Sheet	
C-3035-14	Iban R.	2014-06	HORNOS AE; ACE; APE-202	2-14	Fagor Industrial S.Coop. Oñate FAGOR

MOD.	HORNOS / OVEN	ZONA / ZONE	PUERTA (DESDE 06-2014) / DOOR (FROM 06-2014)	PLANO DIAGRAM	C-3035-14

ITEM	CODIGO REFERENCE	DENOMINACION	DENOMINATION	ACE-202	AE-202	APE-202						ELIMINADO ELIMINATED	INTRODUCID. INTRODUCED	NOTAS / NOTES
1	**12039272**	**KIT CRISTAL INTER. 202**	**202 INNER GLASS KIT**	**1**	**1**	**1**								
2	12097552	TORNILLO AVELLANADO M6x50	COUNTERSAUNK SCREW M6x50	1	1	1							12,03,14	
3	12049719	POSICIONADOR DE BOLA MUELLE	BALL-SPRING FIXER	1	1	1							12,03,14	
4	12049683	INSERTO ASA 20X CIERRE UNICO	HANDLE INSERT 20X SING. LOCK	1	1	1							12,03,14	
5	12025100	CASQUILLO SELFOIL 16-22-25	SELFOIL BUSHING 16-22-25	1	1	1							12,03,14	
6	12049692	LEVA CIERRE UNICO 20X ADV	SINGLE LOCK CAM 20X ADV	1	1	1							12,03,14	
7	12024402	BASE DE BISAGRA	HINGE BASE	2	2	2								
8	12039312	BISAGRA SUPERIOR	UPPER HINGE	1	1	1								
9	12023636	EJE SUPERIOR	UPPER SHAFT	1	1	1								
10	12093685	MUELLE LEVA PUERTA ADVANCE	CAM SPRING ADVANCE DOOR	1	1	1							12,03,14	
11	12102288	INSERTO AMARRE ADV 202	FASTENING INSERT ADV 202	1	1	1							12,03,14	
12	12044773	ASA ADVANCE	ADVANCE HANDLE	1	1	1							12,03,14	
13	12047967	BASE BISAGRA INFERIOR 6 DIEN	LOWER HINGE BASE	1	1	1								
14	12049691	SOPORTE MANILLA 20X	20X HANDLE SUPPORT	1	1	1							12,03,14	
15	12113376	MOD PITON PUERTA	DOOR BOLT MODULE	1	1	1							12,03,14	
16	12024560	INTERRUPTOR MAGNETICO AC	MAGNETIC SWITCH AC	1	1	1								
17	12097533	CASQUILLO SELFOIL TIPOA 16-22-20	SELFOIL BUSHING 16-22-20	1	1	1							12,03,14	
18	12024794	TOPE CRISTAL INTERIOR	INNER GLASS BLOCK	9	9	9								
19	12049660	BISAGRA INF. 202 ADV 6 DIENTES	LOWER HINGE 202 ADV. 6 TEETH	1	1	1								
20	12049282	BISAGRA SUP. 202 TOPE ALTO	TOP HINGE 202	1	1	1								
21	12039298	JUNTA PUERTA COMPL.202 ADV	DOOR JOINT 202 ADV	1	1	1								
22	12039307	JUNTA CIERRE INFERIOR 202	LOWER LOCK JOINT 202	1	1	1								
23	**12094579**	**KIT PUERTA 202 CIERRE UNICO**	**SINGLE LOCK DOOR 202 KIT**	**1**	**1**	**1**								

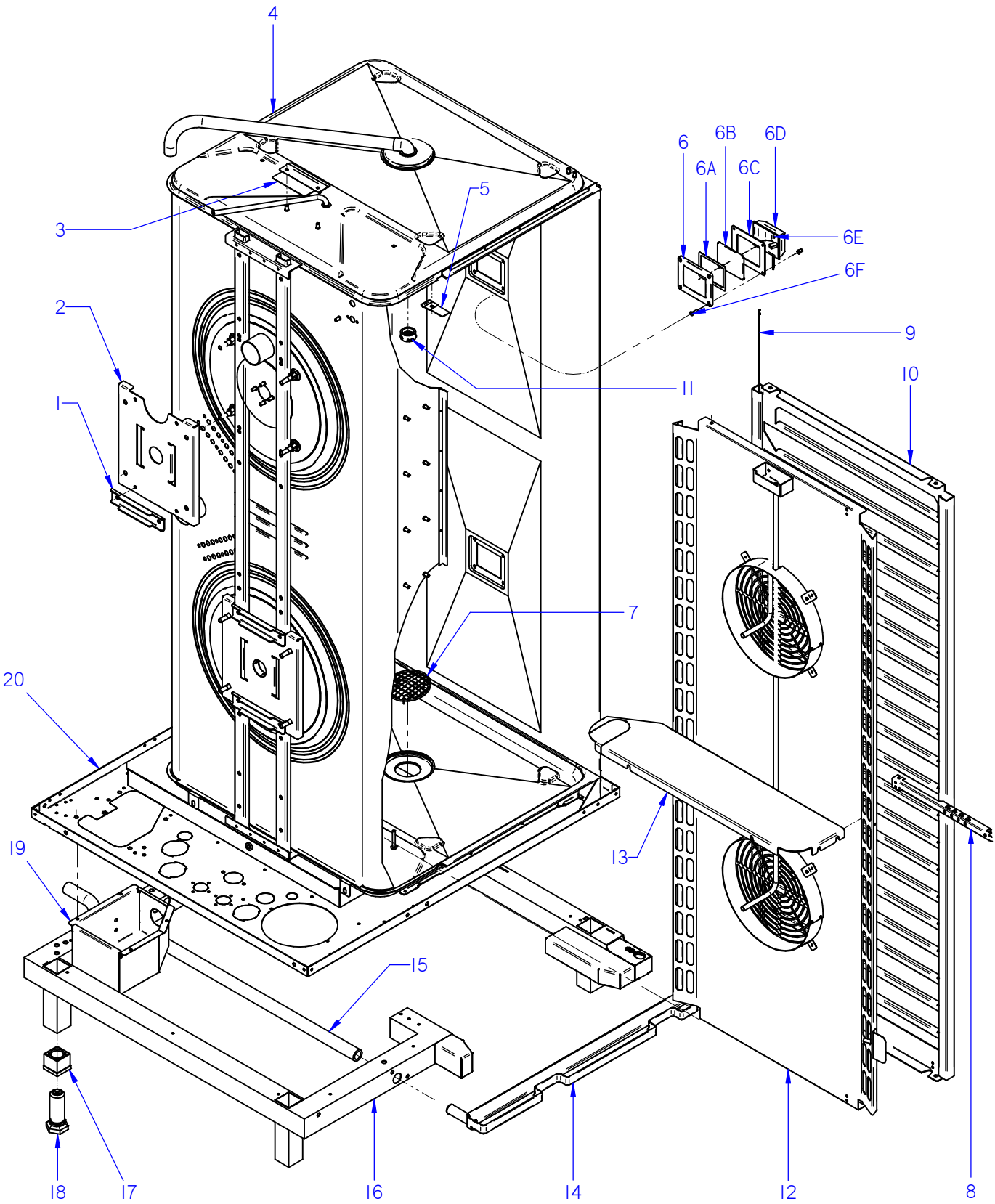

ITEM MARCADO EN COLOR = REPUESTO RECOMENDADO
COLOURED ITEM = RECOMMENDED SPARE PART

Nº plano / N º plane	Firma / Signature	Fecha / Date	Denominación / Denomination: MUEBLE INTERIOR / INTERIOR OVEN	Lamina / Sheet	
C-3036	Iban R.	03-2015	HORNOS AE; ACE; APE-202	3	Fagor Industrial S.Coop. FAGOR Oñate

MOD.	HORNOS / OVEN	ZONA / ZONE	MUEBLE INTERIOR / INTERIOR OVEN	PLANO DIAGRAM	C-3036

ITEM	CODIGO REFERENCE	DENOMINACION	DENOMINATION	ACE-202	AE-202	APE-202						ELIMINADO ELIMINATED	INTRODUCID. INTRODUCED	NOTAS
1	12022413	REFUERZO MOTOR 10/21	MOTOR REINFORCEMENT	3	3	3								
	12009944	ARANDELA A5	FLAT WASHER A.5	8	8	8								
	12009890	ARANDELA ABANICO A5 A.304	FAN SHAPED WASHER A.5	8	8	8								
	12010221	TORNILLO EXAGONAL M5X15	HEXAGONAL BOLT M5X15	8	8	8								
2	12022599	SOPORTE MOTOR	SOPORTE MOTOR	2	2	2								
3	12039529	SOPORTE LIMITADOR CAMARA	LIMITER BRACKET CAMERA	1	1	1								
	12009868	ARANDELA PLANA INOX 6MM	WASHER FLAT 6 MM INOX.	2	2	2								
	12009882	ARANDELA ABANICO A6 A.304	FAN SHAPED WASHER A.6	2	2	2								
	12010255	TORNILLO EXAGONAL M6 INOX.	HEXAGONAL SCREW M6 INOX.	2	2	2								
4	12043624	CUERPO INT. COMPL. CAE 202	INTERIOR FULL BODY CAE 202	1	_	_								
4	12043526	CUERPO INT. COMPL. AE 202	INTERIOR FULL BODY AE 202	_	1	_								
4	12043430	CUERPO INT. COMPL. APE 202	INTERIOR FULL BODY APE 202	_	_	1								
5	12041767	SOPORTE SONDA PINCHO CAMARA	CAMERA PROBE SUPP. PINCHO	1	1	1								
	12009890	ARANDELA ABANICO A5 A.304	FAN SHAPED WASHER A.5	1	1	1								
	12010284	TORNILLO EXAGONAL M5 INOX.	HEXAGONAL SCREW M5 INOX.	1	1	1								
	12010090	REMACHE AVINOX Ø4X7,5MM	AVINOX RIVET Ø4X7,5MM	1	1	1								
6	12024464	MARCO LAMPARA	LAMP ANCHORING PLATEN	2	2	2								
6A	12023532	JUNTA INTERIOR LAMPARA	LAMP INNER JOINT	2	2	2								
6B	12023668	CRISTAL LAMPARA	LAMP GLASS	2	2	2								
6C	12023578	JUNTA EXTERIOR LAMPARA	LAMP OUTER JOINT	2	2	2								
6D	12024545	PORTALAMPARAS	LAMP HOLDER	2	2	2								
6E	12025123	LAMPARA 10W-12V	LIGHT 10W 12V	2	2	2								
6F	12010262	TORNILLO AVELLANADO M4X15	COUNTERSUNK SCREW M.4x15	8	8	8								
7	12024458	FILTRO DESAGÜE Ø70 20/21	DRAINAGE FILTER Ø70 20/21	1	1	1						15.09.13		
7	12095053	FILTRO DESAGÜE Ø73	DRAINAGE FILTER Ø73	1	1	1							15.09.13	
8	**12126827**	**SOPORTE CORE HOLDER**	**CORE HOLDER SUPPORT**	**1**	**1**	**1**							**01.03.13**	
9	12039490	TOPE BANDEJAS 101-102	TRAY TOP 101-102	4	_	_								
10	**12126826**	**PORTABANDEJAS IZDA ACE 202**	**ACE 202 HOLDER LEFT**	**1**	_	_								
10	**12126824**	**PORTABANDEJAS DCHA ACE 202**	**ACE 202 HOLDER RIGHT**	**1**	_	_								
11	12023935	PUNTA DIFUSORA LAVADO	WASHING DISPENSER POINT	_	_	1								
11	12045293	SOPORTE PINCHO 202	SUPP. PINCHO 202	1	1	1								

MOD.	HORNOS / OVEN	ZONA / ZONE	MUEBLE INTERIOR / INTERIOR OVEN	PLANO DIAGRAM	C-3036

ITEM	CODIGO REFERENCE	DENOMINACION	DENOMINATION	ACE-202	AE-202	APE-202						ELIMINADO ELIMINATED	INTRODUCID. INTRODUCED	NOTAS
12	**12126838**	**CUBREVENTILADOR 202**	**FAN COVER 202**	**1**	_	_								
12	**12126839**	**CUBREVENTILADOR 202**	**FAN COVER 202**	_	**1**	**1**								
13	12039335	CHAPA REFUERZO CUBA AG 202	CUBA REINFOR. PLATE AG 202	1	1	1								
	12009868	ARANDELA PLANA INOX 6MM	WASHER FLAT 6 MM INOX.	7	7	7								
	12010255	TORNILLO EXAGONAL M6 INOX.	HEXAGONAL SCREW M6 INOX.	7	7	7								
14	12039363	RECOGEAGUAS HORNO 202	SPRING WATER COLLE. 202	1	_	_								
15	12039498	TUBO RECOGEAGUAS 101	COLLECT WATER PIPE 101	1	_	_						01.02.13		
15	12048417	TUBO RECOGEAGUAS 202	COLLECT WATER PIPE 202	1	_	_							01.02.13	
	12009628	ABRAZADERA ELAST. 26.7-28.1	SPRING CLAMP 26.7-28.1	2	_	_								
16	12044249	REFUERZO BASE COM. ACE 202	FULL BASE REINFORC. ACE 202	1	_	_								
16	12039351	REFUERZO BASE COM. 202	FULL BASE REINFORC. 202	_	1	1								
	12010090	REMACHE AVINOX Ø4X7,5 MM	AVINOX Ø4X7,5 MM RIVET	16	16	16								
17	12043392	TUERCA PATA 202 ADVANCE	NUT LEG 202 ADVANCE	4	4	4								
18	12043393	TORNILLO PATA 202 ADVANCE	SCREW LEG 202 ADVANCE	4	4	4								
19	12004867	CAJA CUBRE BOMBA X02	PUMP CASE COVER X02	_	_	1								
20	12039339	BASE EXTERIOR 202 ADV	EXTERI. BASE 202 ADV	1	1	1								

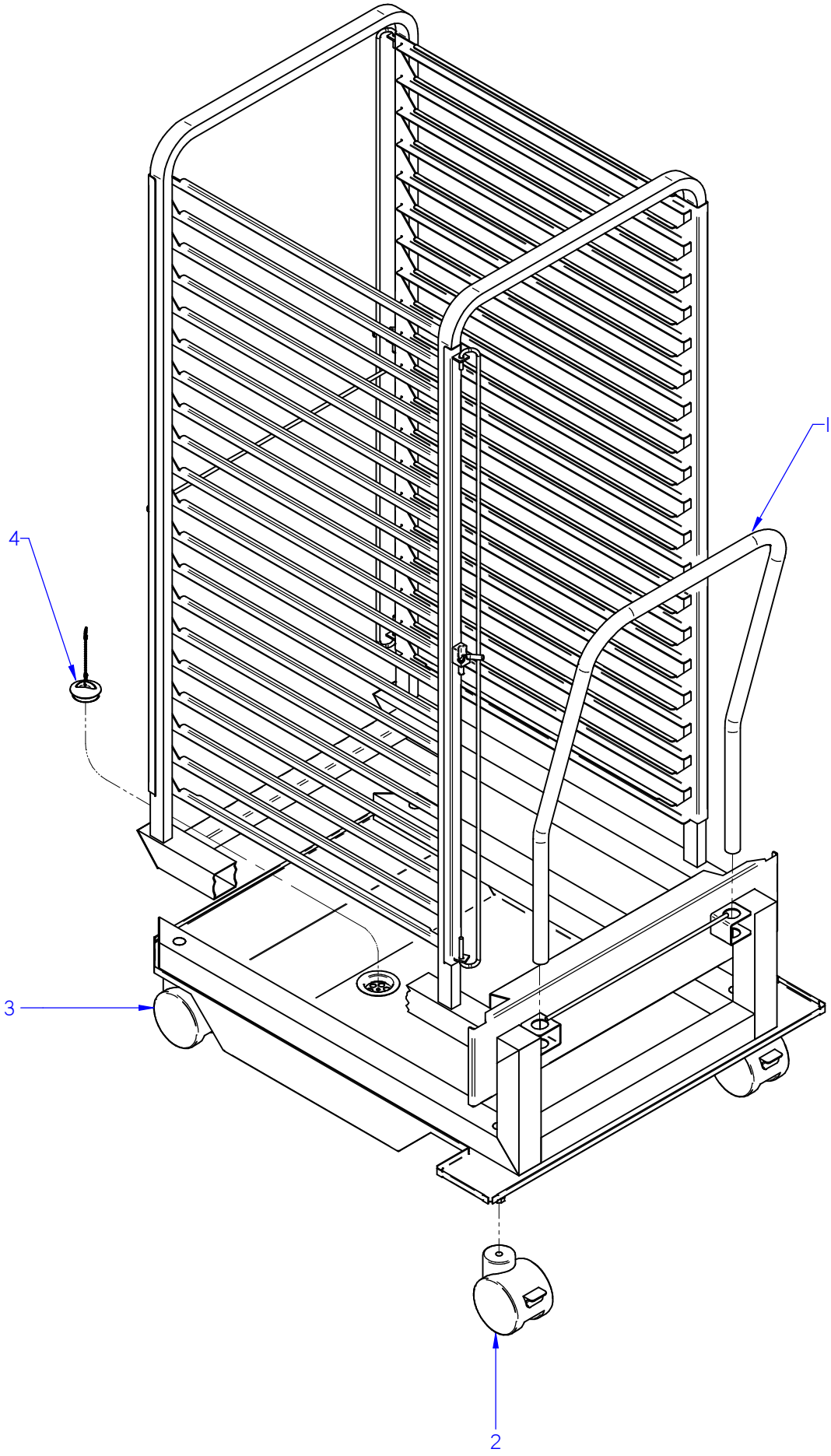

ITEM MARCADO EN COLOR = REPUESTO RECOMENDADO
COLOURED ITEM = RECOMMENDED SPARE PART

Nº plano / N º plane	Firma	Fecha / Date	Denominación / Denomination: CARRO / TROLLEY	Lamina / Sheet	
C-3037		2012-07	HORNOS AE; ACE; APE-202	4	Fagor Industrial S.Coop. FAGOR Oñate

MOD.	HORNOS / OVEN	ZONA / ZONE	CARRO / TROLLEY	PLANO DIAGRAM	C-3037

ITEM	CODIGO REFERENCE	DENOMINACION	DENOMINATION	AE-202	APE-202							ELIMINADO ELIMINATED	INTRODUCID. INTRODUCED	NOTAS
	12044215	**CARRO 202 ADVANCE**	**TROLLEY 202 ADVANCE**	**1**	**1**									
1	12044227	ASA COMPLETA CARRO 202 ADV	HANDLE FULL 202 ADV	1	1									
2	12045349	RUEDA GIRATORIA CON FRENO	SWIVEL WHEEL WITH BRAKE	2	2									
3	12045315	RUEDA GIRATORIA SIN FRENO	SWIVEL WHEEL WITHOUT BR.	2	2									
4	12024275	TAPON Ø44	CAP Ø44	1	1									

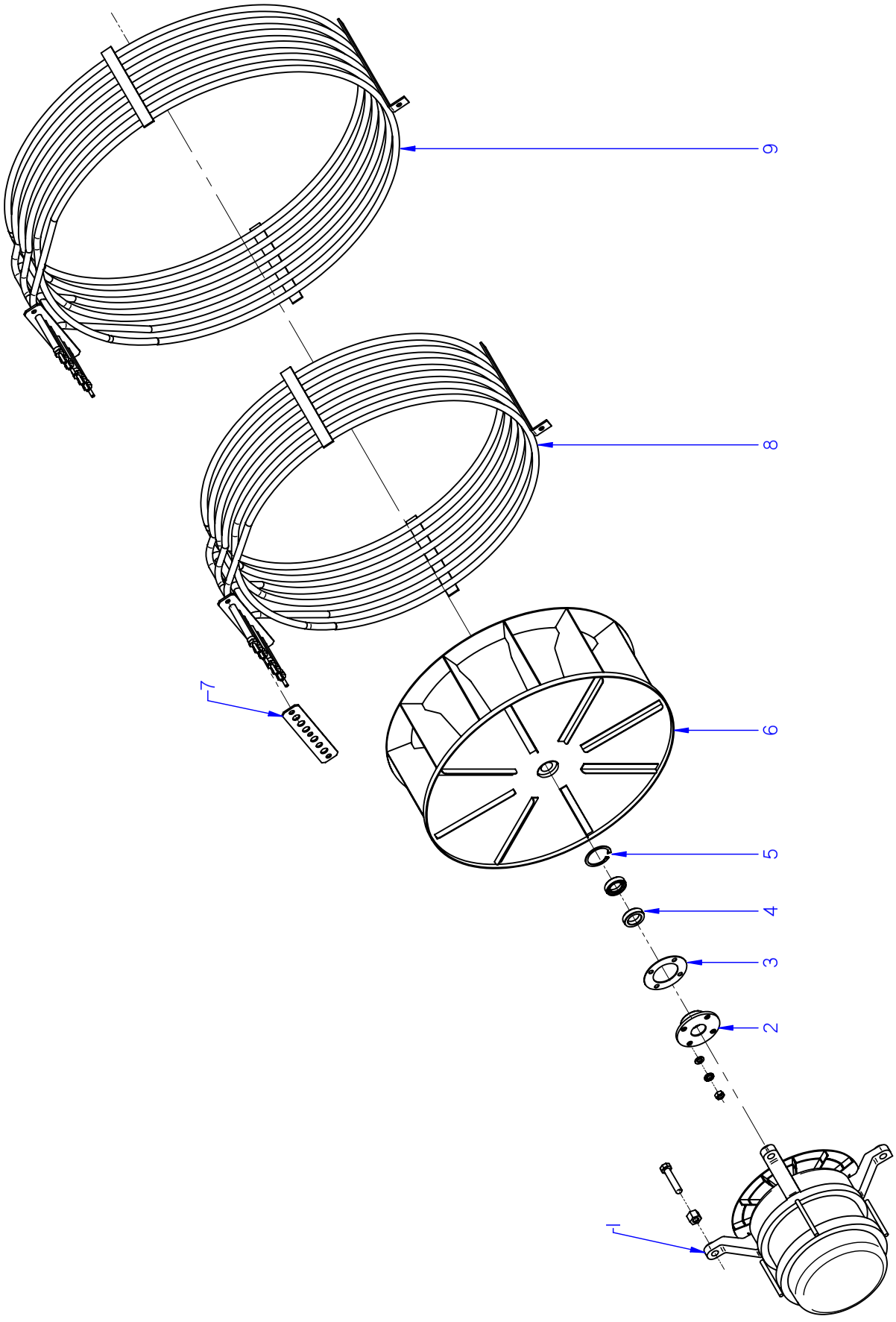

ITEM MARCADO EN COLOR = REPUESTO RECOMENDADO
COLOURED ITEM = RECOMMENDED SPARE PART

Nº plano / N.º plane	Firma	Fecha / Date	Denominación / Denomination: TURBINA / TURBINE	Lamina / Sheet	
C-3038		2012-07	HORNOS AE; ACE; APE-202	5	Fagor Industrial S.Coop. FAGOR Oñate

MOD.	HORNOS / OVEN	ZONA / ZONE	TURBINA / TURBINE	PLANO DIAGRAM	C-3038

ITEM	CODIGO REFERENCE	DENOMINACION	DENOMINATION	ACE-202	AE-202	APE-202						ELIMINADO ELIMINATED	INTRODUCID. INTRODUCED	NOTAS
1	12024325	MOTOR 230V AC 3N650KW 1450RP	MOTOR 230V AC 3N650KW 1450	2	2	2								
S/Nº	12023560	DISTANCIADOR MOTOR 10/21	SPACER MOTOR 10/21	8	8	8								
	12010110	ARANDELA PLANA Fe Zn 8,40MM	WASHER FLAT Fe Zn 8,40MM	8	8	8								
	12009840	ARANDELA ABANICO INOX 8MM	FAN SHAPED WASHER NOX 8MM	8	8	8								
	12010210	TORNILLO EXAGONAL INOX 8MM	HEXAGONAL SCREW INOX 8MM	8	8	8								
2	12024742	CASQUILLO RETEN 10/21	SEAL BUSHING 10/21	2	2	2								
3	12024221	JUNTA CASQUILLO RETEN	SEAL BUSHING GASKET	2	2	2								
	12009868	ARANDELA PLANA INOX 6MM	WASHER FLAT 6 MM INOX.	8	8	8								
	12009882	ARANDELA ABANICO A6 A.304	FAN SHAPED WASHER A.6	8	8	8								
	12010255	TORNILLO EXAGONAL M6 INOX.	HEXAGONAL SCREW M6 INOX.	8	8	8								
	12010056	TORNILLO EXAGONAL M8X40 INOX	HEXAGONAL SCREW M8X40 INO	8	8	8								
4	12024510	RETEN 17X28X7V	RETAINER 28x17x7	4	4	4								
5	12010122	ANILLO DE SEGURIDAD Ø 28X1.2	SAFETY RING 28x1,2	2	2	2								
6	12024306	TURBINA RECTA Ø350X127 HANN.	TURBINE RECTA Ø350X127 HAN	2	2	2								
	12024190	ARANDELA SEGURIDAD HANNING	HANNING SAFETY WASHER	2	2	2								
	12010030	TORNILLO EXAGONAL M10X20	HEXAGONAL SCREW M10X20	2	2	2								
7	12023679	JUNTA RESISTENCIA	RESISTANCE SEAL	4	4	4								
8	12024349	RESISTENCIA INTERIOR 3 X 5KW	INSIDE RESISTANCE 3 X 5KW	2	2	2								
9	12024359	RESISTENCIA EXTERIOR 3 X 5KW	EXTERNAL RESISTANCE 3 X 5KW	2	2	2								
	12009868	ARANDELA PLANA INOX 6MM	WASHER FLAT 6 MM INOX.	16	16	16								
	12009872	ARANDELA GROWER INOX 6MM	WASHER GROWER INOX 6MM	16	16	16								
	12010255	TORNILLO EXAGONAL M6 INOX.	HEXAGONAL SCREW M6 INOX.	4	4	4								
	12010232	ARANDELA LATON M-4	BRASS WASHER M-4	24	24	24								
	12010244	TUERCA EXAGONAL M4 LATON	BRASS HEXAGONAL NUT M4	24	24	24								

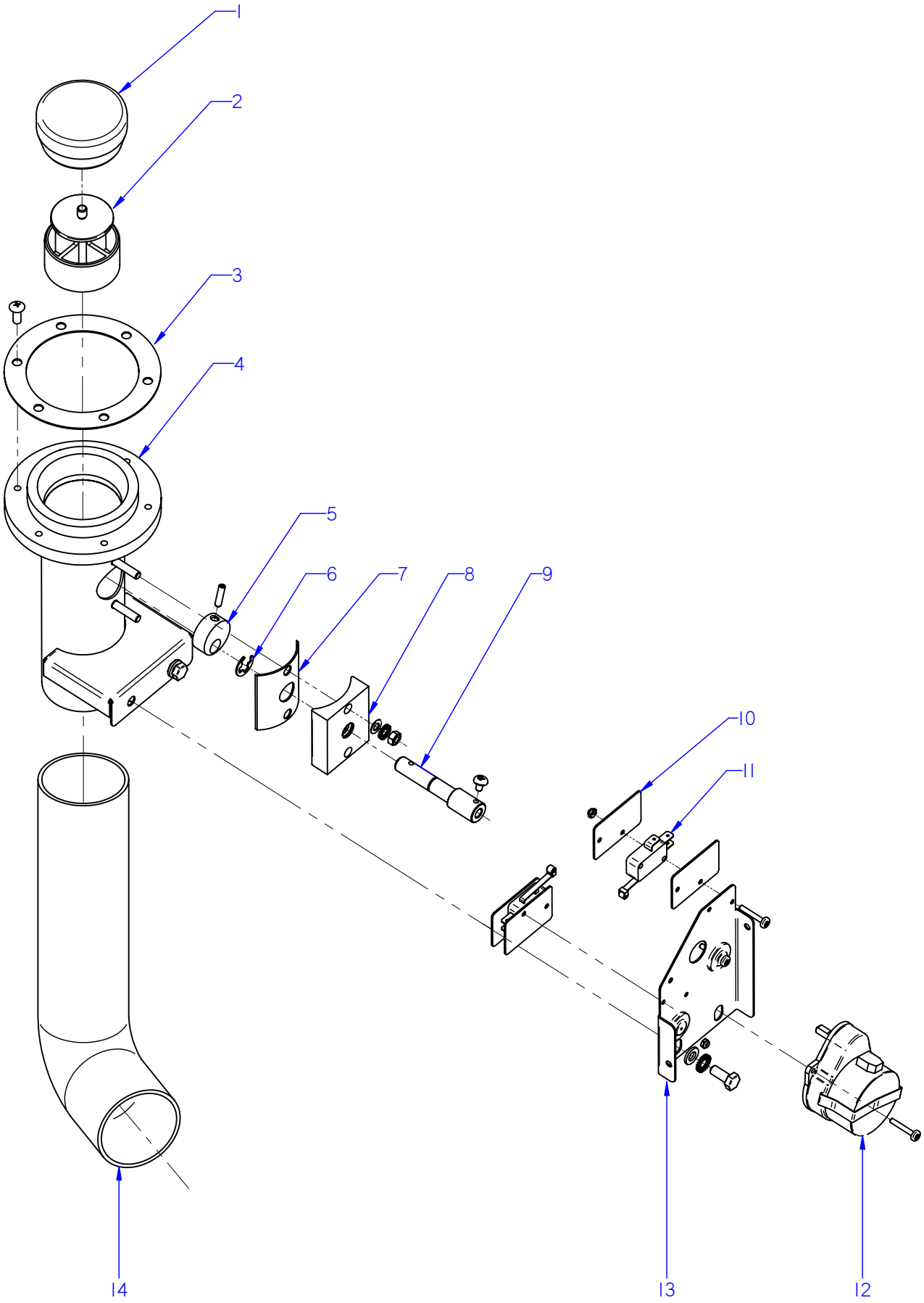

ITEM MARCADO EN COLOR = REPUESTO RECOMENDADO
COLOURED ITEM = RECOMMENDED SPARE PART

Nº plano / N º plane	Firma	Fecha / Date	Denominación / Denomination: CHIMENEA / FLUEPIPE	Lamina / Sheet	
C-3039		2012-07	HORNOS AE; ACE; APE 202	6	Fagor Industrial S.Coop. FAGOR Oñate

MOD.	HORNOS / OVEN	ZONA / ZONE	CHIMENEA / FLUEPIPE	PLANO DIAGRAM	C-3039

ITEM	CODIGO REFERENCE	DENOMINACION	DENOMINATION	ACE-202	AE-202	APE-202						ELIMINADO ELIMINATED	INTRODUCID. INTRODUCED	NOTAS
1	12024520	RETENCION DE VAPORES	CLOSE CHIMNEY	1	1	1								
2	12024500	GUIA RETENCION VAPORES	STEAM RETAINER GUIDE	1	1	1								
3	12023576	JUNTA BASE CHIMENEA	FLUEPIPE BASE SEAL	1	1	1								
S/Nº	12095516	JUNTA TORICA 5x1	O-RING 5x1	6	6	6							17.10.13	
	12010242	TORNIL. APLASTADO M5X13 A 304	FLAT SCREW M.5x13	6	6	6								
4	12022868	CONJUNTO CHIMENEA	COMPLETE CHIMNEY	1	1	1						01.05.14		
4	12104226	CONJUNTO CHIMENEA	COMPLETE CHIMNEY	1	1	1							01.05.14	
	12010126	REMACHE EXAGONAL M.6	HEXAGONAL RIVET M.6	2	2	2								
5	12024328	LEVA EJE CHIMENEA	FLUEPIPE SHAFT CAM	1	1	1								
	12010258	VARILLA ROSCADA M4X16	THREADED ROD M4X16	1	1	1								
6	12010014	ARANDELA DE SEGURIDAD Ø8	SAFETY WASHER Ø8	1	1	1								
7	12023497	JUNTA EJE CHIMENEA	FLUEPIPE SHAFT SEAL	1	1	1								
8	12024436	GUIA EJE CHIMENEA	FLUEPIPE SHAFT GUIDE	1	1	1						01.05.14		
8	12098396	GUIA EJE CHIMENEA	FLUEPIPE SHAFT GUIDE	1	1	1							01.05.14	
S/Nº	12010274	JUNTA TORICA 9.19x2.62	O-RING 9.19x2.62	1	1	1							01.03.13	
	12009944	ARANDELA A5	FLAT WASHER A.5	2	2	2								
	12010284	TUERCA EXAGONAL M5	HEXAGONAL NUT M.5	2	2	2								
9	12024435	EJE CHIMENEA ELECTRICA	ELECTRIC FLUEPIPE SHAFT	1	1	1						01.05.14		
9	12104228	EJE CHIMENEA ELECTRICA	ELECTRIC FLUEPIPE SHAFT	1	1	1							01.05.14	
	12009876	TORNILLO ALOMADO M4X6 ZINC.	CURVED SCREW M4X6 ZINC.	1	1	1								
10	12009985	PLACA SEPARADORA	SPACER PLATE	4	4	4								
	12010247	TORNILLO ALOMADO M3X20	CURVED SCREW M3X20	4	4	4								
	12010289	TUERCA AUTOBLOCANTE M3	SELF-LOCKING NUT M3	4	4	4								
11	12025193	INTERRUPTOR PUERTA	DOOR SWITCH	2	2	2								
12	12024638	MOTOR CHIMENEA	FLUEPIPE MOTOR	1	1	1								
13	12022146	ESCUA. AMARRE MOTOR CHIMEN.	FLUEPIPE MOTOR FASTENING BRAC	1	1	1								
	12009868	ARANDELA A6	WASHER A6	2	2	2								
	12009882	ARANDELA ABANICO A6 A.304	FAN SHAPED WASHER A.6	2	2	2								
	12010186	TORNILLO EXAGONAL M6X15 A304	HEXAGONAL SCREW M6X15	2	2	2								
14	12024122	TUBO FLEXIBLE Ø53X360	FLEXIBLE TUBE Ø53X360	1	1	1								
	12009962	ABRAZADERA 40*60	CLAMP 40*60	2	2	2								

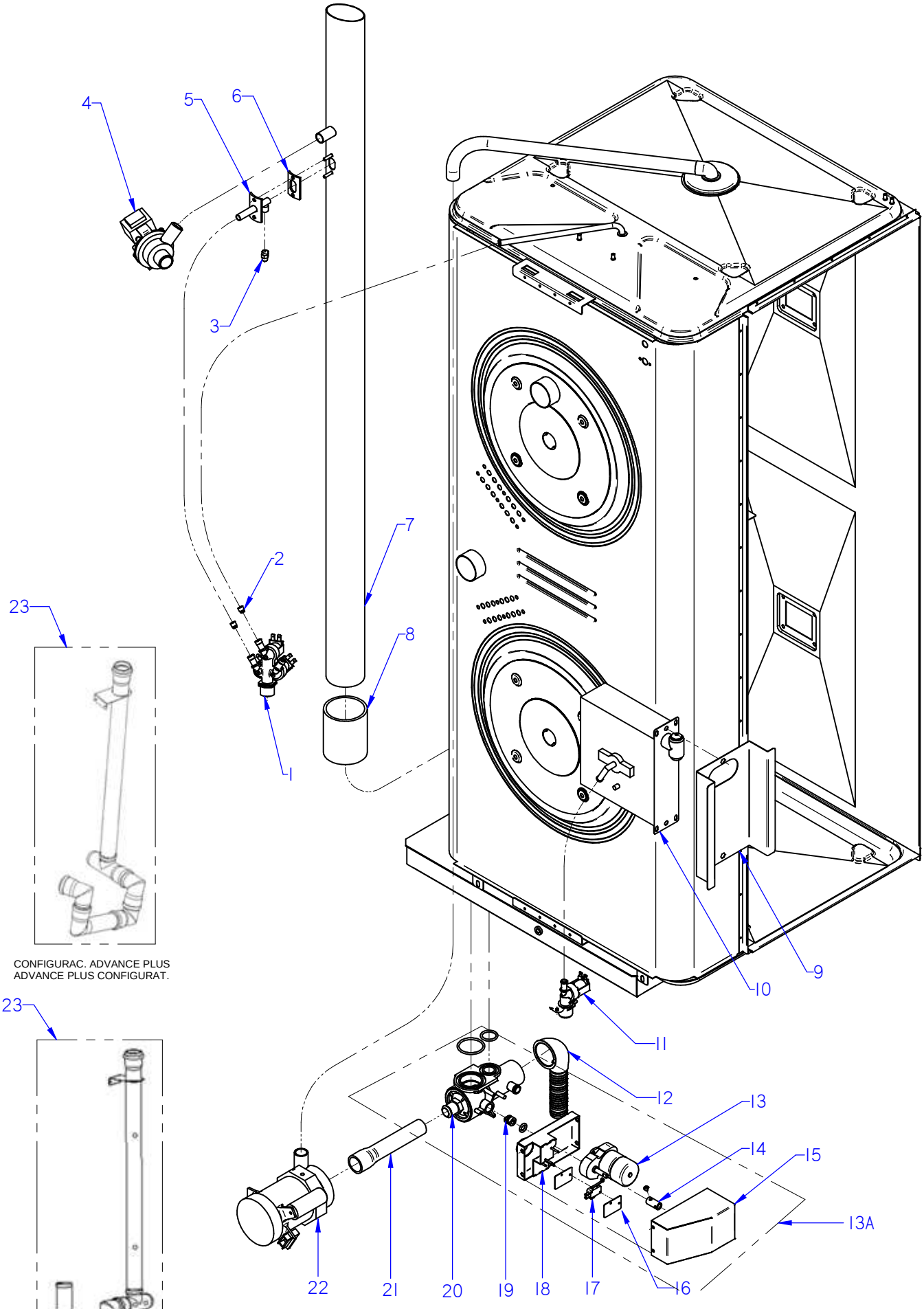

CONFIGURAC. ADVANCE PLUS
ADVANCE PLUS CONFIGURAT.

CONFIGURAC. ADVANCE / CONCEPT
ADVANCE / CONCEPT CONFIGURAT.

ITEM MARCADO EN COLOR = REPUESTO RECOMENDADO
COLOURED ITEM = RECOMMENDED SPARE PART

Nº plano / N º plane	Firma	Fecha / Date	Denominación / Denomination: CONDUCCIONES DE AGUA / WATER PIPES	Lamina / Sheet	
C-3040		2012-07	HORNOS AE; ACE; APE-202	7	Fagor Industrial S.Coop. FAGOR Oñate

MOD.	HORNOS / OVEN	ZONA / ZONE	CONDUCCIONES DE AGUA / WATER PIPES	PLANO DIAGRAM	C-3040

ITEM	CODIGO REFERENCE	DENOMINACION	DENOMINATION	ACE-202	AE-202	APE-202						ELIMINADO ELIMINATED	INTRODUCID. INTRODUCED	NOTAS
1	12025161	ELECTROVALV. 230VAC 50/60Hz 1V	SOLENOID VALVE 230VAC 1 V	2	_	_								
1	12023921	ELECTR. 230V AC 50/60Hz 3 VIAS A	SOLENOID 230V AC 50/60Hz 3 V	_	1	1						01.08.14		
1	12115418	ELECTR. 230V AC 50/60Hz 3 VIAS A	SOLENOID 230V AC 50/60Hz 3 V	_	1	1							01.08.14	
2	12025263	REGULADOR 1L AMARILLO 255.005	CONTROLLER YELL. 1L 255,005	2	2	2						01.12.13		
2	12096625	REGULADOR 1 L MARFIL	CONTROLLER 1L IVORY	2	2	2							01.12.13	
3	12024000	TOBERA 1/8	NOZZLE 1/8	1	1	1						31.03.13		
3	12049131	BOQUILLA 1/8M-B-1-3	INJECTOR 1/8M-B-1-3	1	1	1							31.03.13	
4	12039546	MOTOBOMBA 230V AC 1N 50/60Hz	PUMP 230V AC 50/60Hz 30W 1N	_	1	1								
	12009944	ARANDELA A5	FLAT WASHER A.5	_	2	2								
	12009890	ARANDELA ABANICO A5 A.304	FAN SHAPED WASHER A.5	_	2	2								
	12010221	TORNILLO EXAGONAL M5X15	HEXAGONAL BOLT M5X15	_	2	2								
	12010126	REMACHE EXAGONAL M.6	HEXAGONAL RIVET M.6	_	2	2								
5	12039468	CONDUCC. VAHOS COMPLETO	COMPLETE VAPOUR DUCT	1	1	1								
6	12023605	JUNTA TUBO INYECTOR	INJECTOR PIPE SEAL	1	1	1								
7	12043809	CHIMENEA COMPLETA 202 ACE	COMPL. FLUEPIPE 202 ACE	1	_	_								
7	12041844	CHIMENEA COMPLETA 202 ADV	COMPLET FLUEPIPE 202 ADV	_	1	1								
S/Nº	12024463	CONDENSADOR ELEC. 250V VDE	CONDENSER ELEC. 250V VDE	1	1	1								
8	12023982	TUBO EMPALME GENERADOR	SPLICE TUBE GENERATOR	1	1	1								
	12009914	ABRAZADERA 70-90	CLAMP 70-90	2	2	2								
9	12039369	SOPORTE DUCHA 202	SHOWER 202 STAND	_	1	1						31.01.14		
10	12040977	DUCHA	SHOWER	_	1	1								
	12010267	ARANDELA 16X6X1.2 A.304	FLAT WASHER 16X6X1.2 A.304	_	2	2								
	12010186	TORNILLO EXAGONAL M6X15 A304	HEXAGONAL SCREW M6X15	_	2	2								
11	12025161	ELECTROVALV. 230VAC 50/60Hz 1V	SOLENOID VALVE 230VAC 1 V	_	1	1								
12	12024473	MANGUERA DESAGUE	DRAIN HOSE	_	_	1						02.12.12		
13A	**12126816**	**KIT VALVULA DESAGUE ADVAN.**	**VALVE DRAIN ADVANCE KIT**	_	_	**1**							**12.07.13**	
13	12024754	MOTORREDUCTOR 230V AC 1N	MOTOREDUCER 230V AC 1N	_	_	1						02.03.15		
13	12122403	MOTORREDUCTOR 230V AC 1N	MOTOREDUCER 230V AC 1N	_	_	1							02.03.15	
14	12023906	CASQUILLO MOTOR MICRO	MICRO MOTOR BUSHING	_	_	1								
	12009876	TORNILLO ALOMADO M4X6 H.ZIN.	CURVED SCREW M4X6 H.ZIN.	_	_	2								
	12010262	TORNILLO AVELLANADO M4X15	COUNTERSUNK SCREW M.4x15	_	_	2								

MOD.	HORNOS / OVEN	ZONA / ZONE	CONDUCCIONES DE AGUA / WATER PIPES	PLANO DIAGRAM	C-3040

ITEM	CODIGO REFERENCE	DENOMINACION	DENOMINATION	ACE-202	AE-202	APE-202						ELIMINADO ELIMINATED	INTRODUCID. INTRODUCED	NOTAS
15	12003203	TAPA SISTEMA LAVADO	TOP WASH SYSTEM	_	_	1						02.03.15		
15	12122407	TAPA SISTEMA LAVADO	TOP WASH SYSTEM	_	_	1							02.03.15	
	12010242	TORNIL. APLASTADO M5X13 A 304	FLAT SCREW M.5x13	_	_	4								
16	12009985	PLACA SEPARADORA	SPACER PLATE	_	_	4								
	12010247	TORNILLO ALOMADO M3X20	CURVED SCREW M3X20	_	_	7								
	12010289	TUERCA AUTOBLOCANTE M3	SELF-LOCKING NUT M3	_	_	7								
17	12025193	INTERRUPTOR PUERTA	DOOR SWITCH	_	_	2								
18	12003183	SOPORTE MICROS LAVADO	MICROS WASH STAND	_	_	1						02.03.15		
18	12122404	SOPORTE MICROS LAVADO	MICROS WASH STAND	_	_	1							02.03.15	
	12010163	REMACHE EXAGONAL M.5	HEXAGONAL RIVET M.5	_	_	4								
19	12023796	PUNTA ACOPLE MOTOR A VALVUL	CONN. POINT MOTOR TO VALVE	_	_	1								
	12019645	JUNTA TORICA Ø10x3.5	O-RING Ø10X3.5	_	_	1								
S/Nº	12010273	MANG. SUJEC. 4X14 DIN1481	CLAMPING SLEEVE 4x14 DIN 1481	_	_	1								
20	12024796	CUERPO VALVULA COMPLETO	COMPLETE VALVE BODY	_	_	1								
	12010081	JUNTA TORICA Ø52X3,5	O-RING Ø52X3.5	_	_	1								
	12010131	JUNTA TORICA Ø33x3,5	O-RING Ø33x3.5	_	_	1								
	12024532	JUNTA TEFLON VALVULA	TEFLON VALVE BOARD	_	_	2								
	12009181	JUNTA TEFLON VALVULA	TEFLON VALVE BOARD	_	_	2								
21	12024425	GOMA VALVULA BOMBA	PUMP VALVE RUBBER	_	_	1								
	12010023	ABRAZADERA 20-32	CLAMP 20-32	_	_	1								
	12009997	ABRAZADERA 25-40	CLAMP 25-40	_	_	1								
22	12024782	MOTOBOMBA 230V AC 1N 50Hz	MOTOR 230V AC 1N 50Hz 74,6	_	_	1								
	12009868	ARANDELA PLANA INOX 6MM	WASHER FLAT 6 MM INOX.	_	_	2								
	12009882	ARANDELA ABANICO A6 A.304	FAN SHAPED WASHER A.6	_	_	2								
	12010186	TORNILLO EXAGONAL M6X15 A304	HEXAGONAL SCREW M6X15	_	_	2								
S/Nº	12025198	MANGUERA ENTRADA AGUA	WATER INLET HOSE	1	1	1								
23	12047404	MOD CONJUNTO DESAGUE ADV	ADV DRAIN SET MODEL	1	1	1							03,12,12	

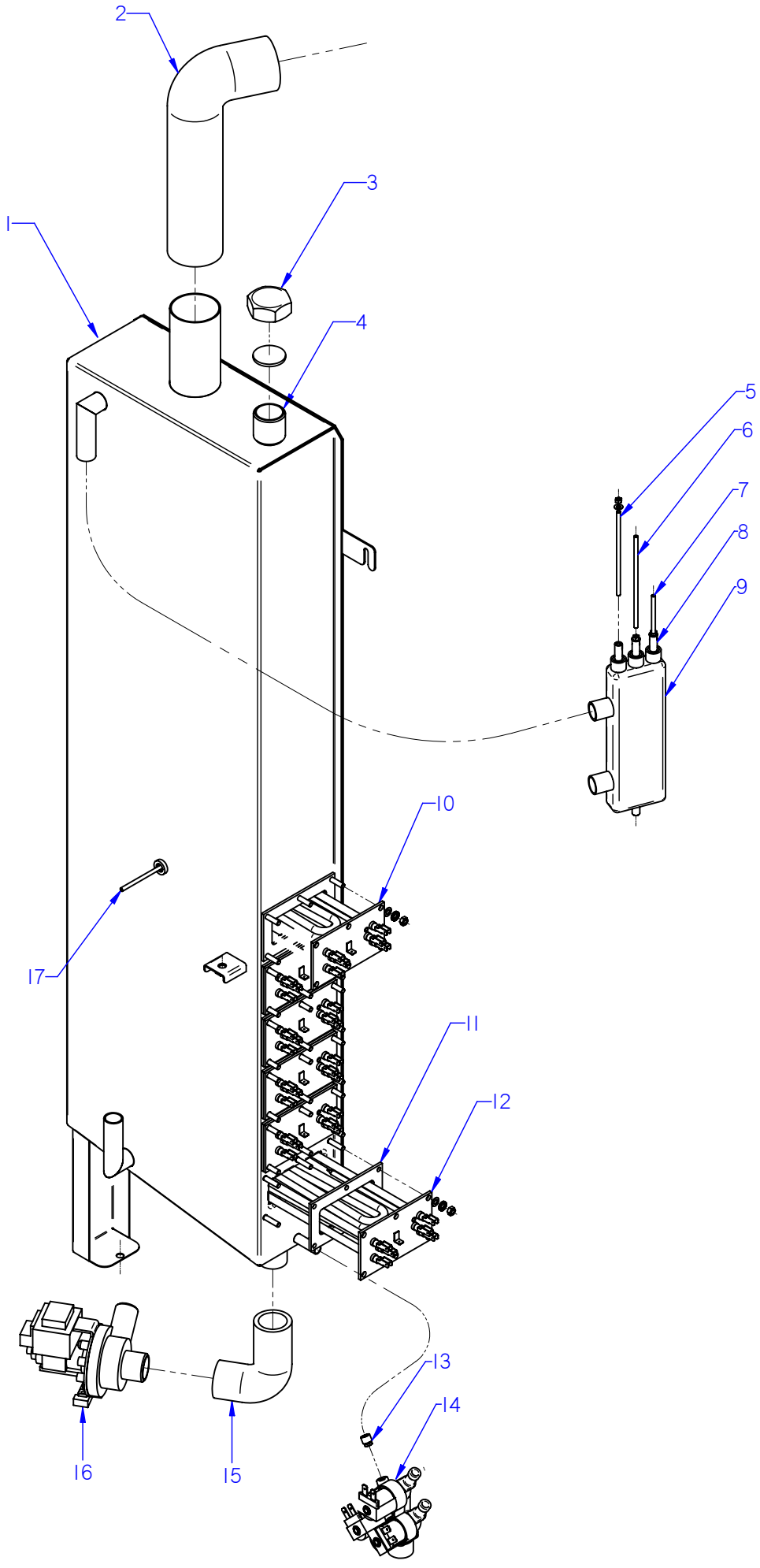

ITEM MARCADO EN COLOR = REPUESTO RECOMENDADO
COLOURED ITEM = RECOMMENDED SPARE PART

Nº plano / N º plane	Firma	Fecha / Date	Denominación / Denomination: CIRCUITO DE VAPOR / STEAM CIRCUIT	Lamina / Sheet	
C-3041		2012-07	HORNOS AE-202; APE-202	8	Fagor Industrial S.Coop. Oñate FAGOR

MOD.	HORNOS / OVEN	ZONA / ZONE	CIRCUITO DE VAPOR / STEAM CIRCUIT	PLANO DIAGRAM	C-3041

ITEM	CODIGO REFERENCE	DENOMINACION	DENOMINATION	AE-202	APE-202							ELIMINADO ELIMINATED	INTRODUCID. INTRODUCED	NOTAS
1	**12046064**	**KIT GENERADOR VAPOR 202**	**STEAM GENERATOR 202 KIT**	**1**	**1**									
S/Nº	11000157	TUBO SILICONA Tº Ø 26*18	HIGH SILICON PIPE Tº Ø 26*18	3	3									
	12009628	ABRAZADERA ELASTICA 26,7*28,1	ELAST. CLAMP 26,7*28,1	6	6									
2	12041855	TUBO FLEXIBLE Ø53X360	FLEXIBLE TUBE Ø53X360	1	1									
	12009962	ABRAZADERA 40*60	CLAMP 40*60	2	2									
3	12009699	TUERCA TAPON 1"	PLUG NUT 1"	1	1									
4	12009884	ARANDELA Ø32	WASHER Ø32	1	1									
5	12023573	ELECTRODO ALTO	HIGH LEVEL ELECTRODE	1	1									
6	12023574	ELECTRODO BAJO	LOW LEVEL ELECTRODE	1	1									
7	12023575	ELECTRODO DE MASA	EARTH ELECTRODE	1	1									
	12009987	ARANDELA A4	FLAT WASHER A4	3	3									
	12009839	TUERCA EXAGONAL M4	HEXAGONAL NUT M.4º	3	3									
8	12024460	GUIA AISLANTE	INSULATION GUIDE	3	3									
9	12024419	BOTE DE NIVELES	LEVELS VESSEL	1	1							02.06.14		
9	12113061	BOTE DE NIVELES INOX	LEVELS VESSEL S.STEEL	1	1								02.06.14	
	12010044	TUERCA EXAGONAL M8 PLASTIC	HEXAGONAL NUT M8 PLASTIC	1	1									
10	12024752	RESISTENCIA 3x3000W 230V	RESISTOR 3x3000W 230V	1	1									
11	12023680	JUNTA CIERRE RESISTENCIAS	RESISTOR SEAL	6	6									
	12010284	TUERCA EXAGONAL M5	HEXAGONAL NUT M.5	36	36									
	12009890	ARANDELA ABANICO A5 A.304	FAN SHAPED WASHER A.5	36	36									
12	12024747	RESISTENCIA 3x3000W	RESISTOR 3x3000W	5	5									
13	12024045	REGULADOR 8L 54.034 ROJO	REGULATOR 8L RED 54.034	1	1							10.11.13		
13	12096626	REGULADOR 8 L AZUL	BLUE REGULATOR 8L	1	1								10.11.13	
14	12023921	ELECTR. 230V AC 50/60Hz 3 VIAS A	SOLENOID 230V AC 50/60Hz 3 V	1	1							01.08.14		
14	12115418	ELECTR. 230V AC 50/60Hz 3 VIAS A	SOLENOID 230V AC 50/60Hz 3 V	1	1								01.08.14	
S/Nº	11000083	T. GOMA NEGRA Ø17*10	BLACK RUBBER PIPE Ø17*10	1	1									
	12010036	ABRAZADERA 12*20	CLAMP 12-20	2	2									
15	12039649	TUBO DESAGÜE GENERADOR	DRAIN TUBE GENERATOR	1	1									
	12009997	ABRAZADERA 25*40	CLAMP 25*40	2	2									
16	12039546	MOTOBOMBA 230V AC 1N 50/60Hz	PUMP 230V AC 50/60Hz 30W 1N	1	1									
17	12023901	CONJUNTO TERMOPAR VAPOR	STEAM THERMOCOUPLE UNIT	1	1									

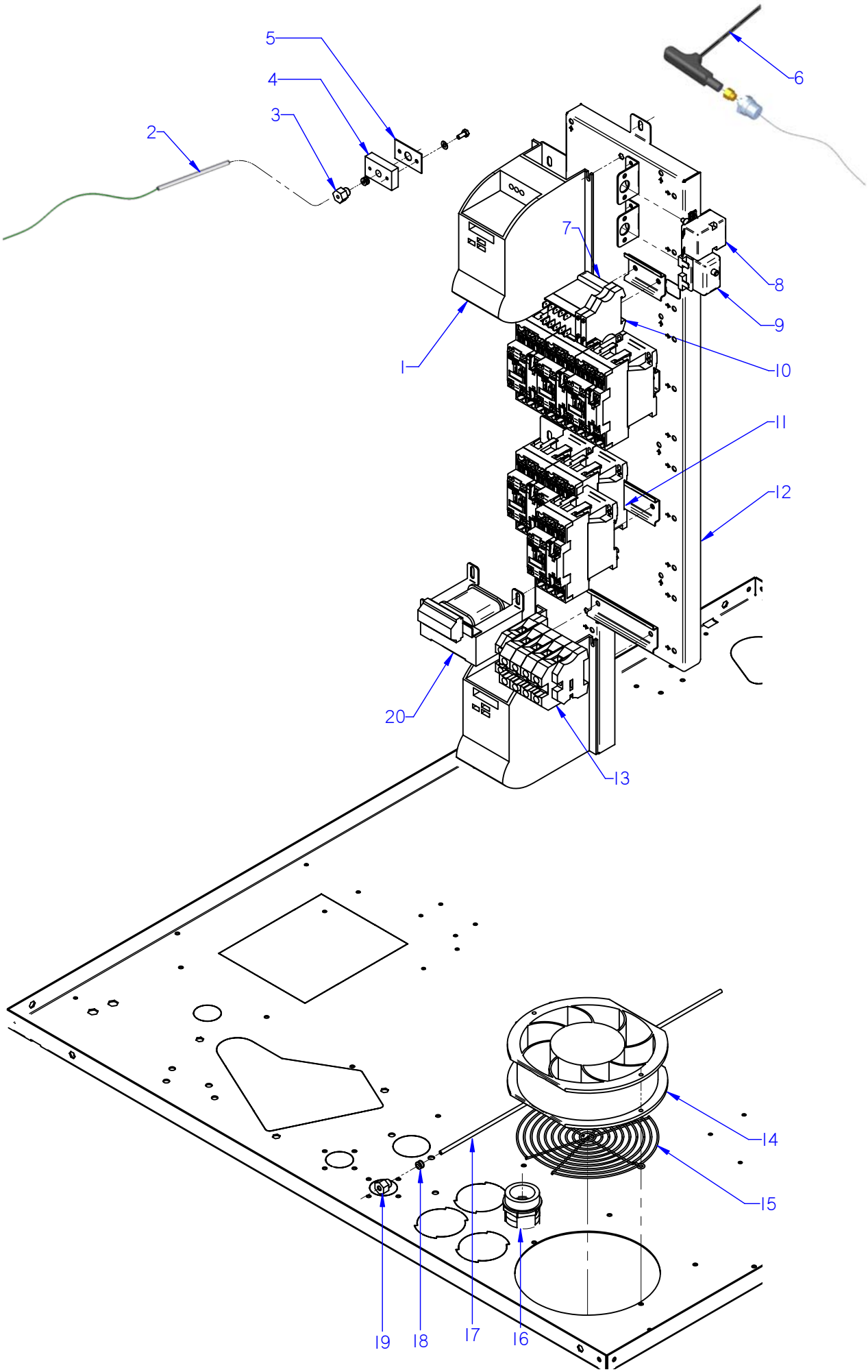

ITEM MARCADO EN COLOR = REPUESTO RECOMENDADO
COLOURED ITEM = RECOMMENDED SPARE PART

Nº plano / N º plane	Firma	Fecha / Date	Denominación / Denomination: CUADRO ELECTRICO / ELECTRIC PANEL	Lamina / Sheet	
C-3042		2012-07	HORNOS AE; ACE; APE-202	9	Fagor Industrial S.Coop. FAGOR Oñate

MOD.	HORNOS / OVEN	ZONA / ZONE	CUADRO ELECTRICO / ELECTRIC PANEL	PLANO DIAGRAM	C-3042

ITEM	CODIGO REFERENCE	DENOMINACION	DENOMINATION	ACE-202	AE-202	APE-202						ELIMINADO ELIMINATED	INTRODUCID. INTRODUCED	NOTAS
1	12024329	VARIADOR FRECUENCIA SIE 0,37KW	FREQUENCY VARIATOR SIE 0.37	2	2	2						26.02.13		
1	12048798	REP VARIADOR REGULADO ADV	REGULATED VARIATOR ADV	2	2	2							26.02.13	
	12009987	ARANDELA A4	FLAT WASHER A.4	8	8	8								
	12010278	TORNILLO ALOMADO M4X10	CURVED SCREW M.4x10	8	8	8								
	12009839	TUERCA EXAGONAL M4	HEXAGONAL NUT M.4º	8	8	8								
S/Nº	12024067	CASQUILLO	BUSHING	4	4	4							13.05.13	
S/Nº	12025235	CONECTOR PASO 3,96MM 8 VIAS	CONNECTOR ROUTES 3,96MM 8	1	1	1								
2	12024642	CONJUN. TERMOPAR CAMARA (K)	CHAMBER THERMOCOUPLE UNIT (K)	1	1	1								
3	12023581	RACORD CIERRE SONDA	PROBE CLOSING ADAPTOR	1	1	1								
S/Nº	12024247	BICONO CIERRE SONDA	PROBE CLOSING BICONE	1	1	1								
4	12023737	BASE CIERRE SONDA	FIXING CORE PROBE	1	1	1								
5	12023504	JUNTA PASAMUROS SIMPLE	SIMPLE	1	1	1								
	12009987	ARANDELA A4	FLAT WASHER A.4	4	4	4								
	12010249	TORNILLO EXAGONAL M4X10	HEXAGONAL BOLT M4X10	4	4	4								
6	12039548	SONDA PINCHO ADVANCE	ADVANCE PROBE PINCHO	1	1	1								
	12010110	ARANDELA Ø 8.4X20X1.5	FLAT WASHER Ø 8.4X20X1.5	1	1	1								
	12040566	CONTRATUERCA H 1/4"	COUNTERNUT H 1/4"	1	1	1								
7	12024011	CONTACTOR 230 V. 50-60 HZ	230 V. 50-60 HZ CONTACTOR	1	1	1								
8	12024591	TERMOSTATO LIMITADOR 10/21	LIMITER THERMOSTAT10/21	1	1	1								
9	12024884	TERMOSTATO LIMITADOR CORTE	THERMOSTAT LIMITER	_	1	1								
S/Nº	12022001	SOPORTE TERMOS VAPOR	THERMOSTAT SUPPORT	2	2	2								
	12023499	TUERCA M.10x1 EGO 00.00600.075	NUT M.10x1 EGO 00.00600.075	2	2	2								
10	12025158	BORNAS PORTA FUSIBLES	FUSE HOLDER TERMINAL	2	2	2								
S/Nº	12024152	FUSIBLE 10A Ø5MM 20X5	10A Ø5MM 20X5 FUSE	2	2	2								
11	12043505	CONTAC. 230V AC 50/60Hz 50A 3	CONTAC. 230V AC 50/60Hz 50A 3	6	6	6								
12	12041726	CUADRO ELECTRICO 201-202 ADV	ELECTRICAL PANEL 201-202 ADV	1	1	1								
13	12024942	BORNA PASO 192A 70mm2 1vía UL	TERMINAL STEP 192A 70mm2 1v	3	3	3								
	12024515	BORNA TIERRA 35MM	EARTH TERMINAL 35mm	1	1	1								
	12024946	BORNA NEUTRO AZUL 192A 70	NEUTRAL TERMINAL BLUE 192A	1	1	1								
	12025158	BORNA PORTAFUSIBLES	FUSE HOLDER TERMINAL	2	2	2								
	12025171	TOPE FINAL BORNA 35mm2 UL	TOP END TERMINAL 35mm2 UL	1	1	1								

MOD.	HORNOS / OVEN	ZONA / ZONE	CUADRO ELECTRICO / ELECTRIC PANEL	PLANO DIAGRAM	C-3042

ITEM	CODIGO REFERENCE	DENOMINACION	DENOMINATION	ACE-202	AE-202	APE-202						ELIMINADO ELIMINATED	INTRODUCID. INTRODUCED	NOTAS
14	12024106	VENTILADOR 230V AC 1N 50/60Hz 3	FAN 230V AC 1N 50/60Hz 36KW	2	2	2								
15	12024790	PROTECCI. VENTILADOR RM-155	FAN PROTECTION RM-155	1	1	1								
	12009882	ARANDELA ABANICO A6 A.304	FAN SHAPED WASHER A.6	1	1	1								
	12009987	ARANDELA A4	FLAT WASHER A.4	6	6	6								
	12009928	ARANDELA ABANICO A4 A.304	FAN SHAPED WASHER A.4	6	6	6								
16	12024994	PRENSA ESTOPAS PG42	STUFFING BOX PG42	1	1	1								
	12025204	CONTRATUERCA PG42	COUNTERNUT PG42	1	1	1								
17	12039678	CONJUN.TERMOPAR VAPOR Ø4	STEAM THERMOCOUP. UNIT Ø4	_	_	1								
17	12039678	CONJUN.TERMOPAR VAPOR Ø4	STEAM THERMOCOUP. UNIT Ø4	1	1	_						01.12.12		
17	12047675	CONJUN.TERMOPAR VAPOR L625	STEAM THERMOCO. UNIT L625	1	1	_							01.12.12	
18	12043409	BICONO CIERRE SONDA Ø4	PROBE CLOSING BICONE Ø4	1	1	1								
19	12041049	RACORD CIERRE SONDA Ø 4	PROBE CLOSING ADAPTOR Ø 4	1	1	1								
20	12024173	TRANSFORMADOR 12-0-12-0,24-0	TRANSFORMER 12-0-12-0,24-0	1	1	1								
S/Nº	12024463	CONDENSADOR ELEC. 250V VDE	CONDENSER ELEC. 250V VDE	_	_	1								

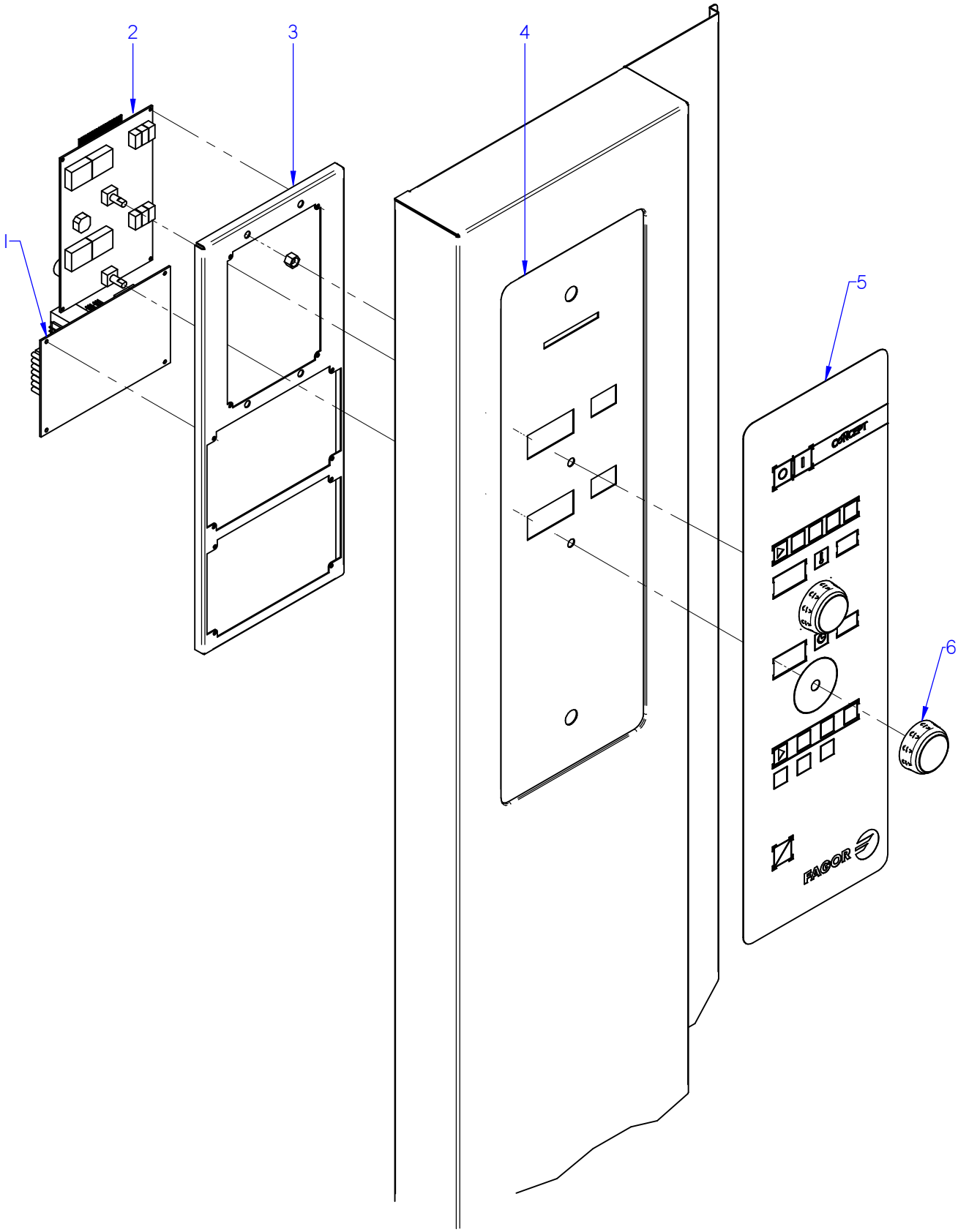

ITEM MARCADO EN COLOR = REPUESTO RECOMENDADO
COLOURED ITEM = RECOMMENDED SPARE PART

Nº plano / N º plane	Firma	Fecha / Date	Denominación / Denomination: PORTAMANDOS / CONTROL HOLDER	Lamina / Sheet	
C-3043		2012-07	HORNOS ACE-202	10	Fagor Industrial S.Coop. Oñate FAGOR

MOD.	HORNOS / OVEN	ZONA / ZONE	CONJUNTO ELECTRICO PORTAMANDOS / CONTROL HOLDER ELECTRIC UNIT	PLANO DIAGRAM	C-3043

ITEM	CODIGO REFERENCE	DENOMINACION	DENOMINATION	ACE-202								ELIMINADO ELIMINATED	INTRODUCID. INTRODUCED	NOTAS
1	12046659	CONTROL TARJETA CAM.12V AC .	CARD CONTROL 12V AC 50/60Hz	1										
2	12046671	VISUALIZADOR 12V AC 50/60Hz 12D	12V AC 50/60Hz 12D DISPLAY	1										
3	12043668	SOPORTE PROG. CONCEPT ADV	CIRCUIT SUPPO. CONCEPT AD	1										
4	12093219	FRENTE PORTAM. CONCEPT	CONTROL PANEL FRONT CONC.	1									01.10.13	
S/Nº	12041815	JUNTA PORTAMANDOS ADV PLUS	CONTROL PANEL SEAL ADV PLUS	1									01.10.13	
5	12044109	SERIGRAFIA CONCEPT ADVANCE E.	SERIGRAPHY CONCEPT ADVAN	1										
6	12046201	BOTON CONCEPT ADV	CONTROL BUTTON CONC. ADV	2										

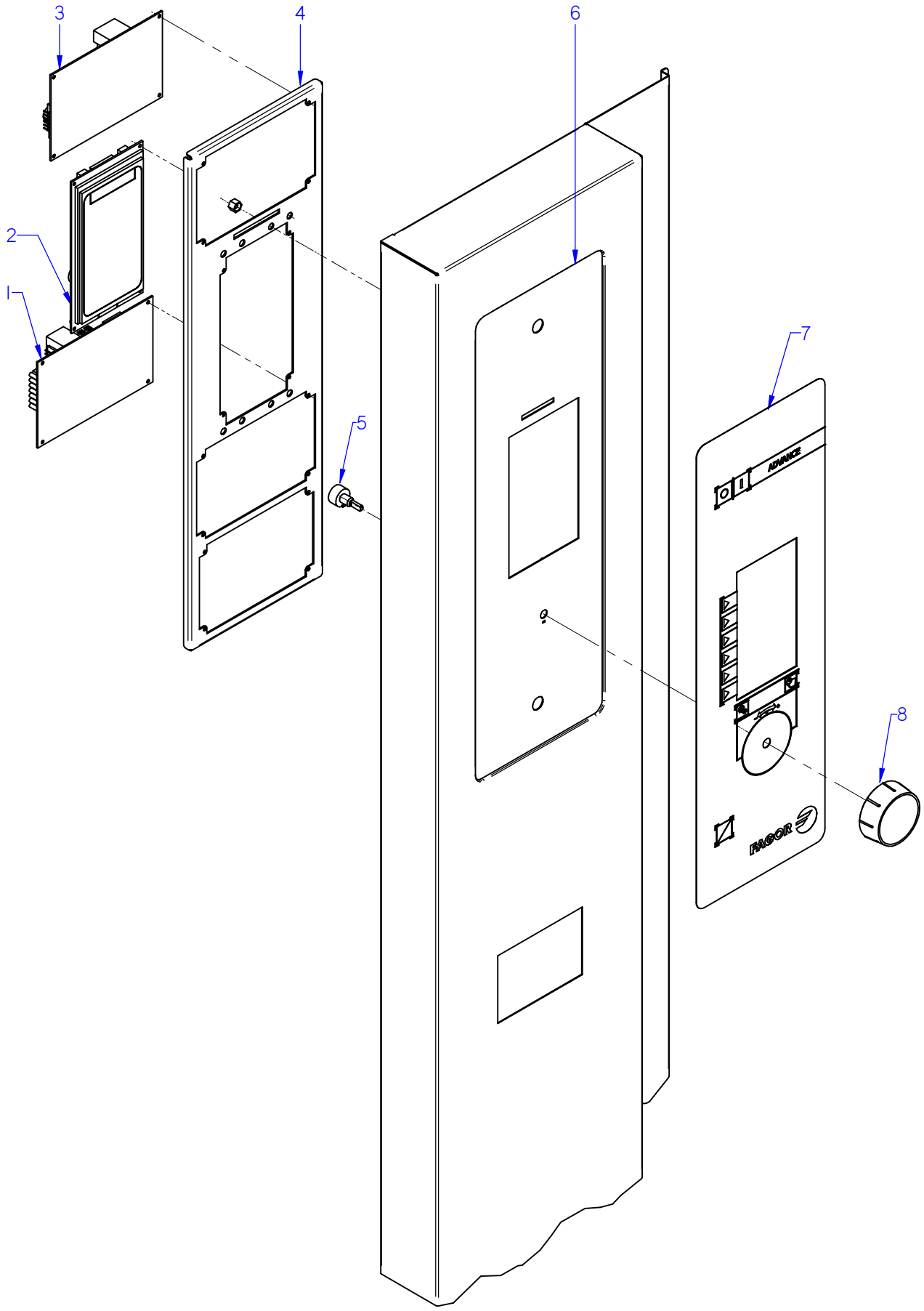

ITEM MARCADO EN COLOR = REPUESTO RECOMENDADO
COLOURED ITEM = RECOMMENDED SPARE PART

Nº plano / N º plane	Firma	Fecha / Date	Denominación / Denomination: PORTAMANDOS / CONTROL HOLDER	Lamina / Sheet	
C-3044		2012-07	HORNOS AE-202	11	Fagor Industrial S.Coop. FAGOR Oñate

MOD.	HORNOS / OVEN	ZONA / ZONE	CONJUNTO ELECTRICO PORTAMANDOS / CONTROL HOLDER ELECTRIC UNIT	PLANO DIAGRAM	C-3044

ITEM	CODIGO REFERENCE	DENOMINACION	DENOMINATION	AE-202								ELIMINADO ELIMINATED	INTRODUCID. INTRODUCED	NOTAS
1	12046659	CONTROL TARJETA CAM.12V AC .	CARD CONTROL 12V AC 50/60Hz	1										
2	12046672	VISUALIZADOR 12V AC 50/60Hz 32 D	12V AC 50/60Hz 32 D DISPLAY	1										
3	12046670	CONTROL TARJETA CALD. 12V AC 50/6	CARD CONTROL 12V AC 50/60Hz	1										
4	12039536	SOPORTE CIRCUITOS ADVANCE	CIRCUIT SUPPORT ADVANCE	1										
	12009944	ARANDELA A5	FLAT WASHER A.5	4										
	12010281	TUERCA EXAGONAL AUT M5 H. ZI.	HEXAGONAL NUT M5 H. ZINC,	4										
5	12043405	ENCODER GAMA ADVANCE	ADVANCE RANGE ENCODER	1										
6	12093236	FRENTE PORTAM. AE-AG COMP.	CONTROL PANEL FRONT AE-AG	1									01.10.13	
S/Nº	12041815	JUNTA PORTAMANDOS ADV PLUS	CONTROL PANEL SEAL ADV PLUS	1									01.10.13	
7	12044139	SERIGRAFIA ADVANCE	ADVANCE SERIGRAPHY	1										
8	12044074	BOTON DE MANDO ADV	ADV CONTROL BUTTON	1										

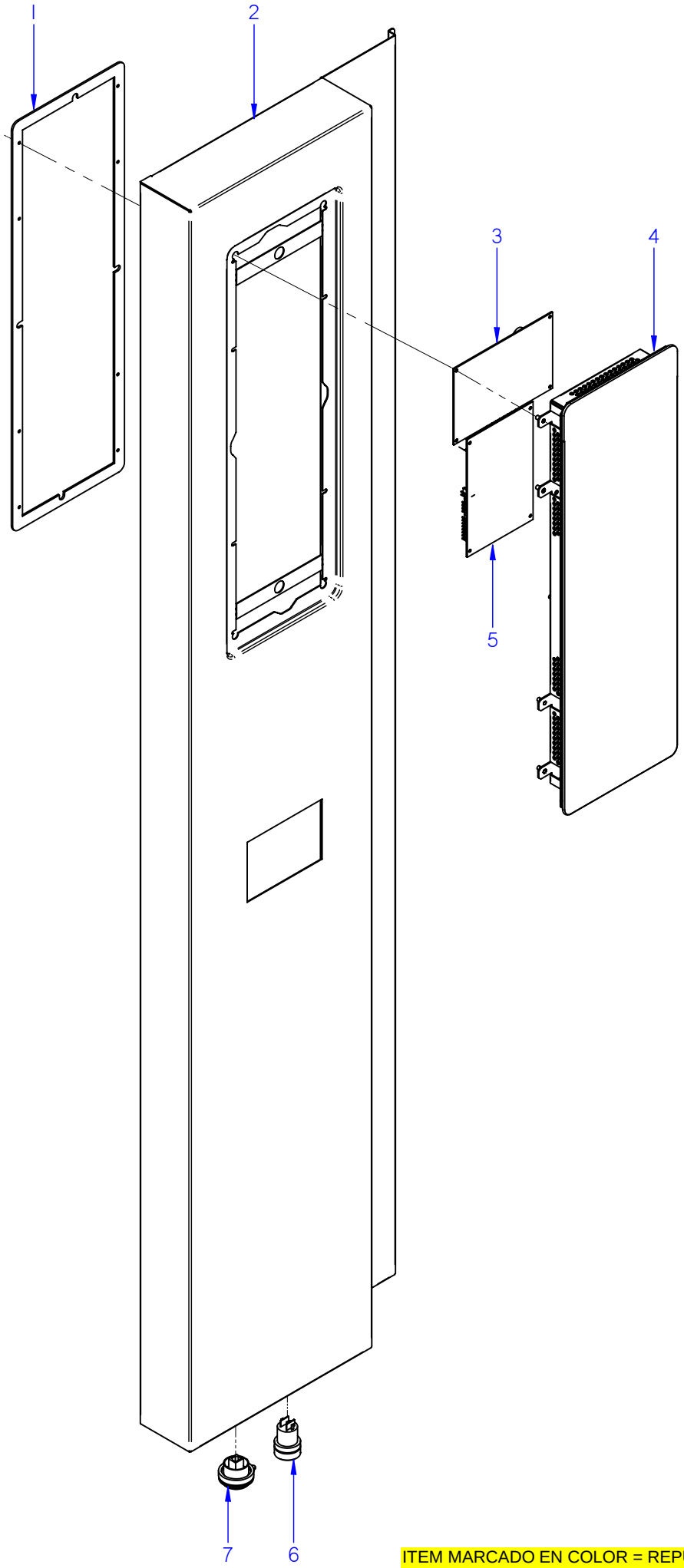

ITEM MARCADO EN COLOR = REPUESTO RECOMENDADO
COLOURED ITEM = RECOMMENDED SPARE PART

Nº plano / N º plane	Firma	Fecha / Date	Denominación / Denomination: PORTAMANDOS / CONTROL HOLDER	Lamina / Sheet	
C-3045		2012-07	HORNOS APE-202	12	Fagor Industrial S.Coop. FAGOR Oñate

MOD.	HORNOS / OVEN	ZONA / ZONE	CONJUNTO ELECTRICO PORTAMANDOS / CONTROL HOLDER ELECTRIC UNIT	PLANO DIAGRAM	C-3045

ITEM	CODIGO REFERENCE	DENOMINACION	DENOMINATION	APE-202								ELIMINADO ELIMINATED	INTRODUCID. INTRODUCED	NOTAS
1	12041815	JUNTA PORTAMANDOS ADV PLUS	CONTROL PANEL SEAL ADV PLUS	1										
	12010289	TUERCA AUTOB. M3 DIN985	SELF-LOCK NUT M3 DIN985	6										
	12010288	CLIP SUJECIÓN RÁPIDA Ø 4	RAPID CONNECT CLIP Ø 4	12										
2	12039418	PORTAMANDOS APG 202	CONTROL PANEL APG 202	1								01.02.14		
2	12097624	MOD PORTAMANDO 202 ADV PL.	CONTROL PANEL 202 ADV PLUS	1									01.02.14	
3	12046670	CONTROL TARJETA CALD. 12V AC 50/6	CARD CONTROL 12V AC 50/60Hz	1										
4	12046579	PLAT ADV PLUS CON SOFTWARE	ADV PLUS SOFTWARE PLATF.	1								25.05.15		
4	12121349	PLAT ADV PLUS CON SOFTWARE	ADV PLUS SOFTWARE PLATF.	1									25.05.15	
5	12046659	CONTROL TARJETA CAM.12V AC .	CARD CONTROL 12V AC 50/60Hz	1										
6	12023927	PULSADOR SERIE MICRO	MICRO SWITCH SERIES	1										
7	12024064	CONECTOR USB VISUAL PLUS	VISUAL PLUS USB CONNECTOR	1										
S/Nº	12023647	TAPA USB VISUAL PLUS	VISUAL PLUS USB COVER	1										

MOD.	HORNOS / OVEN	ZONA / ZONE	VARIOS / MISCELLANEOUS	PLANO DIAGRAM	

ITEM	CODIGO REFERENCE	DENOMINACION	DENOMINATION	ACE-202	AE-202	APE-202						ELIMINADO ELIMINATED	INTRODUCID. INTRODUCED	NOTAS
	12045296	MANUAL DE USUARIO ADV CONCE	USER MANUAL ADV CONCEPT	1	_	_								
	12044975	MANUAL DE INSTALACION CONCE	INSTALLATION MANUAL CONCEP	1	_	_								
	12045298	MANUAL DE USUARIO ADVANCE	USER MANUAL ADVANCE	_	1	_								
	12044976	MANUAL DE INSTALACION ADVAN	INSTALLATION MANUAL ADVAN.	_	1	_								
	12045299	MANUAL DE USUARIO ADV PLUS	USER MANUAL ADV PLUS	_	_	1								
	12044977	MANUAL INSTALAC. ADV PLUS E.	INSTALL. MANUAL ADV PLUS E.	_	_	1								
	12041777	ESQUEMA TEORICO ADE	THEORETICAL DIAGRAM ADE	1	1	1								
	12041895	PLANO MONTAJE ACE, AE, APE	ASSEMBLY PLAN ACE, AE, APE	1	1	1								
	12043770	INSTAL. ELECTRICA ACE 201, 202	ELEC. INSTALL. ACE 201, 202	1	_	_								
	12041729	INST. ELECTR. APE, AE, 202, 201	ELEC. INSTA. APE, AE, 202, 201	_	1	1								
	12043797	CABLEADO ACE 20 2	WIRING ACE 20 2	1	_	_								
	12043793	CABLEADO FUERZA ACE 20 2	POWER WIRE ACE 20 2	1	_	_								
	12041830	CABLEADO FUERZA APE 202	POWER WIRE APE 202	_	1	1								
	12041804	CABLEA. RESISTENCIAS APE 202	RESISTOR WIRING APE 202	_	1	1								
	12024575	CABLEADO LUZ INTERIOR 20-21	INTERIOR LIGHT WIRING 20-21	1	1	1								
	12023696	CABLEADO BMF	WIRING BMF	1	1	1								
	12040567	CABLEADO LAVADO 201-102-202	WIRING CABLE 201-102-202	_	_	1								
	12008976	CABLEADO PULSADOR RESET	RESET BUTTON WIRING	_	_	1								
	12023775	CABLE USB VISUAL PLUS 1,5M	VISUAL PLUS USB CABLE 1,5M	_	_	1								
	12009277	CD HACCP VISUAL COMPLETO	HACCP CD COMPLETE VISUAL	_	_	1								
	12022177	LEYENDA HORNOS	LEGEND OVENS	1	1	1								

MOD.	HORNOS / OVEN	ZONA / ZONE	REPUESTOS RECOMENDADOS RECOMMENDED SPARE PART	PLANO DIAGRAM	

ITEM	CODIGO REFERENCE	DENOMINACION	DENOMINATION	ACE-202	AE-202	APE-202						ELIMINADO ELIMINATED	INTRODUCID. INTRODUCED	NOTAS
23	**12094579**	**KIT PUERTA 202 CIERRE UNICO**	**SINGLE LOCK DOOR 202 KIT**	**1**	**1**	**1**								C-3035-14
1	**12039272**	**KIT CRISTAL INTER. 202**	**202 INNER GLASS KIT**	**1**	**1**	**1**								C-3035-14
8	12039312	BISAGRA SUPERIOR	UPPER HINGE	1	1	1								C-3035-14
12	12044773	ASA ADVANCE	ADVANCE HANDLE	1	1	1								C-3035-14
13	12047967	BASE BISAGRA INFERIOR 6 DIEN	LOWER HINGE BASE	1	1	1								C-3035-14
16	12024560	INTERRUPTOR MAGNETICO AC	MAGNETIC SWITCH AC	1	1	1								C-3035-14
21	12039298	JUNTA PUERTA 202	DOOR JOINT 202	1	1	1								C-3035-14
22	12039307	JUNTA CIERRE INFERIOR 202	LOWER LOCK JOINT 202	1	1	1								C-3035-14
1	12024325	MOTOR 230V AC 3N650KW 1450RPM	MOTOR 230V AC 3N650KW 1450	2	2	2								C-3038
4	12024510	RETEN 17X28X7V	RETAINER 28x17x7	4	4	4								C-3038
5	12010122	ANILLO DE SEGURIDAD Ø 28X1.2	SAFETY RING 28x1,2	2	2	2								C-3038
7	12023679	JUNTA RESISTENCIA	RESISTANCE SEAL	4	4	4								C-3038
8	12024349	RESISTENCIA INTERIOR 3 X 5KW	INSIDE RESISTANCE 3 X 5KW	2	2	2								C-3038
9	12024359	RESISTENCIA EXTERIOR 3 X 5KW	EXTERNAL RESISTANCE 3 X 5KW	2	2	2								C-3038
11	12025193	INTERRUPTOR PUERTA	DOOR SWITCH	2	2	2								C-3039
12	12024638	MOTOR CHIMENEA	FLUEPIPE MOTOR	1	1	1								C-3039
14	12024122	TUBO FLEXIBLE Ø53X360	FLEXIBLE TUBE Ø53X360	1	1	1								C-3039
1	12025161	ELECTROVALV. 230VAC 50/60Hz 1V	SOLENOID VALVE 230VAC 1 V	2	_	_								C-3040
1	12115418	ELECTR. 230V AC 50/60Hz 3 VIAS A	SOLENOID 230V AC 50/60Hz 3 V	_	1	1								C-3040
8	12023982	TUBO EMPALME GENERADOR	SPLICE TUBE GENERATOR	1	1	1								C-3040
10	12040977	DUCHA	SHOWER	_	1	1								C-3040
11	12025161	ELECTROVALV. 230VAC 50/60Hz 1V	SOLENOID VALVE 230VAC 1 V	_	1	1								C-3040
13A	**12126816**	**KIT VALVULA DESAGUE ADVAN.**	**VALVE DRAIN ADVANCE KIT**	_	_	**1**								C-3040
22	12024782	MOTOBOMBA 230V AC 1N 50Hz	MOTOR 230V AC 1N 50Hz 74,6	_	_	1								C-3040
23	12047404	MOD CONJUNTO DESAGUE ADV	ADV DRAIN SET MODEL	1	1	1								C-3040
1	**12046064**	**KIT GENERADOR VAPOR 202**	**STEAM GENERATOR 202 KIT**	_	**1**	**1**								C-3041
2	12041855	TUBO FLEXIBLE Ø53X360	FLEXIBLE TUBE Ø53X360	_	1	1								C-3041
5	12023573	ELECTRODO ALTO	HIGH LEVEL ELECTRODE	_	1	1								C-3041
6	12023574	ELECTRODO BAJO	LOW LEVEL ELECTRODE	_	1	1								C-3041
7	12023575	ELECTRODO DE MASA	EARTH ELECTRODE	_	1	1								C-3041
10	12024752	RESISTENCIA 3x3000W 230V	RESISTOR 3x3000W 230V	_	1	1								C-3041

MOD.	HORNOS / OVEN	ZONA / ZONE	REPUESTOS RECOMENDADOS RECOMMENDED SPARE PART	PLANO DIAGRAM	

ITEM	CODIGO REFERENCE	DENOMINACION	DENOMINATION	ACE-202	AE-202	APE-202						ELIMINADO ELIMINATED	INTRODUCID. INTRODUCED	NOTAS
11	12023680	JUNTA CIERRE RESISTENCIAS	RESISTOR SEAL	_	6	6								C-3041
12	12024747	RESISTENCIA 3x3000W	RESISTOR 3x3000W	_	5	5								C-3041
14	12115418	ELECTR. 230V AC 50/60Hz 3 VIAS A	SOLENOID 230V AC 50/60Hz 3 V	_	1	1								C-3041
15	12039649	TUBO DESAGUE GENERADOR	DRAIN TUBE GENERATOR	_	1	1								C-3041
16	12039546	MOTOBOMBA 230V AC 1N 50/60Hz	PUMP 230V AC 50/60Hz 30W 1N	_	1	1								C-3041
17	12023901	CONJUNTO TERMOPAR VAPOR	STEAM THERMOCOUPLE UNIT	_	1	1								C-3041
1	12048798	REP VARIADOR REGULADO ADV	REGULATED VARIATOR ADV	2	2	2								C-3042
2	12024642	CONJUN. TERMOPAR CAMARA (K)	CHAMBER THERMOCOUPLE UNI	1	1	1								C-3042
6	12039548	SONDA PINCHO ADVANCE	ADVANCE PROBE PINCHO	1	1	1								C-3042
8	12024591	TERMOSTATO LIMITADOR 10/21	LIMITER THERMOSTAT10/21	1	1	1								C-3042
9	12024884	TERMOSTATO LIMITADOR CORTE	THERMOSTAT LIMITER	_	1	1								C-3042
14	12024106	VENTILADOR 230V AC 1N 50/60Hz 3	FAN 230V AC 1N 50/60Hz 36KW	2	2	2								C-3042
17	12047675	CONJ. TERMOPAR VAPOR K L625	STEAM THERMOCOUPLE UNIT	1	1	1								C-3042
18	12043409	BICONO CIERRE SONDA Ø4	PROBE CLOSING BICONE Ø4	1	1	1								C-3042
19	12041049	RACORD CIERRE SONDA Ø 4	PROBE CLOSING ADAPTOR Ø 4	1	1	1								C-3042
20	12024173	TRANSFORMADOR 12-0-12-0,24-0	TRANSFORMER 12-0-12-0,24-0	1	1	1								C-3042
S/Nº	12024463	CONDENSADOR ELEC. 250V VDE	CONDENSER ELEC. 250V VDE	_	_	1								C-3042
1	12046659	CONTROL TARJETA CAM.12V AC .	CARD CONTROL 12V AC 50/60Hz	1	_	_								C-3043
2	12046671	VISUALIZADOR 12V AC 50/60Hz 12D	12V AC 50/60Hz 12D DISPLAY	1	_	_								C-3043
5	12044109	SERIGRAFIA CONCEPT ADVANCE E.	SERIGRAPHY CONCEPT ADVAN	1	_	_								C-3043
1	12046659	CONTROL TARJETA CAM.12V AC .	CARD CONTROL 12V AC 50/60Hz	_	1	_								C-3044
2	12046672	VISUALIZADOR 12V AC 50/60Hz 32 D	12V AC 50/60Hz 32 D DISPLAY	_	1	_								C-3044
3	12046670	CONTROL TARJETA CALD. 12V AC 50/6	CARD CONTROL 12V AC 50/60Hz	_	1	_								C-3044
5	12043405	ENCODER GAMA ADVANCE	ADVANCE RANGE ENCODER	_	1	_								C-3044
7	12044139	SERIGRAFIA ADVANCE	ADVANCE SERIGRAPHY	_	1	_								C-3044
1	12041815	JUNTA PORTAMANDOS ADV PLUS	CONTROL PANEL SEAL ADV PLUS	_	_	1								C-3045
3	12046670	CONTROL TARJETA CALD. 12V AC 50/6	CARD CONTROL 12V AC 50/60Hz	_	_	1								C-3045
4	12121349	PLAT ADV PLUS CON SOFTWARE	ADV PLUS SOFTWARE PLATF.	_	_	1								C-3045
5	12046659	CONTROL TARJETA CAM.12V AC .	CARD CONTROL 12V AC 50/60Hz	_	_	1								C-3045
6	12023927	PULSADOR SERIE MICRO	MICRO SWITCH SERIES	_	_	1								C-3045

MOD.	HORNOS / OVEN	ZONA / ZONE	REPUESTOS RECOMENDADOS RECOMMENDED SPARE PART	PLANO DIAGRAM	

ITEM	CODIGO REFERENCE	DENOMINACION	DENOMINATION	ACE-202	AE-202	APE-202						ELIMINADO ELIMINATED	INTRODUCID. INTRODUCED	NOTAS
7	12024064	CONECTOR USB VISUAL PLUS	VISUAL PLUS USB CONNECTOR	_	_	1								C-3045
S/Nº	12023647	TAPA USB VISUAL PLUS	VISUAL PLUS USB COVER	_	_	1								C-3045
8	12039312	BISAGRA SUPERIOR	UPPER HINGE	1	1	1								C-3035

APE 06 1, APE 10 1, APE 10 2, APE 20 1, APE 20 2
AE 06 1, AE 10 1, AE 10 2, AE 20 1, AE 20 2
ACE 06 1, ACE 10 1, ACE 10 2, ACE 20 1, ACE 20 2

Mod. 101	RC2=3x3KW
Mod. 201	RC2=3x6KW
Mod. 102	RC2=3x5KW
Mod. 202	RC2=6x5KW

Mod. 061, 101	RC1=3x3KW
Mod. 201	RC1=3x6KW
Mod. 102	RC1=3x5KW
Mod. 202	RC1=6x5KW

Mod. VPE, VE,	Mod. 061, 101	RV1=3x3KW
	Mod. 201, 102	RV1=6x3KW
	Mod. 202	RV1=9x3KW
	Mod. 101, 102, 201	RV2=3x3KW
	Mod. 202	RV2=9x3KW

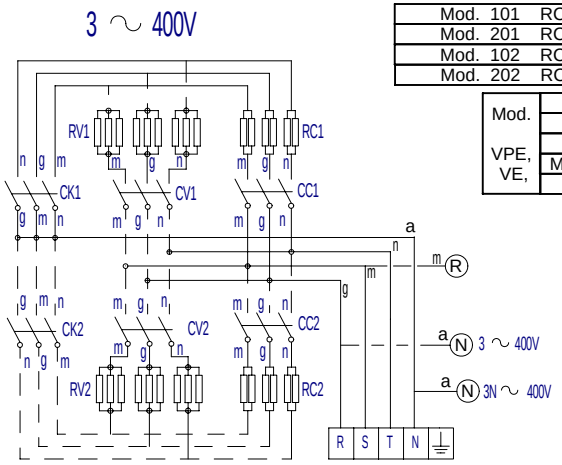

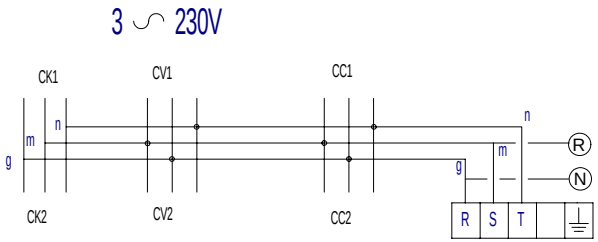

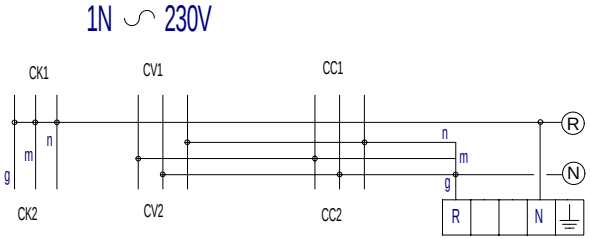

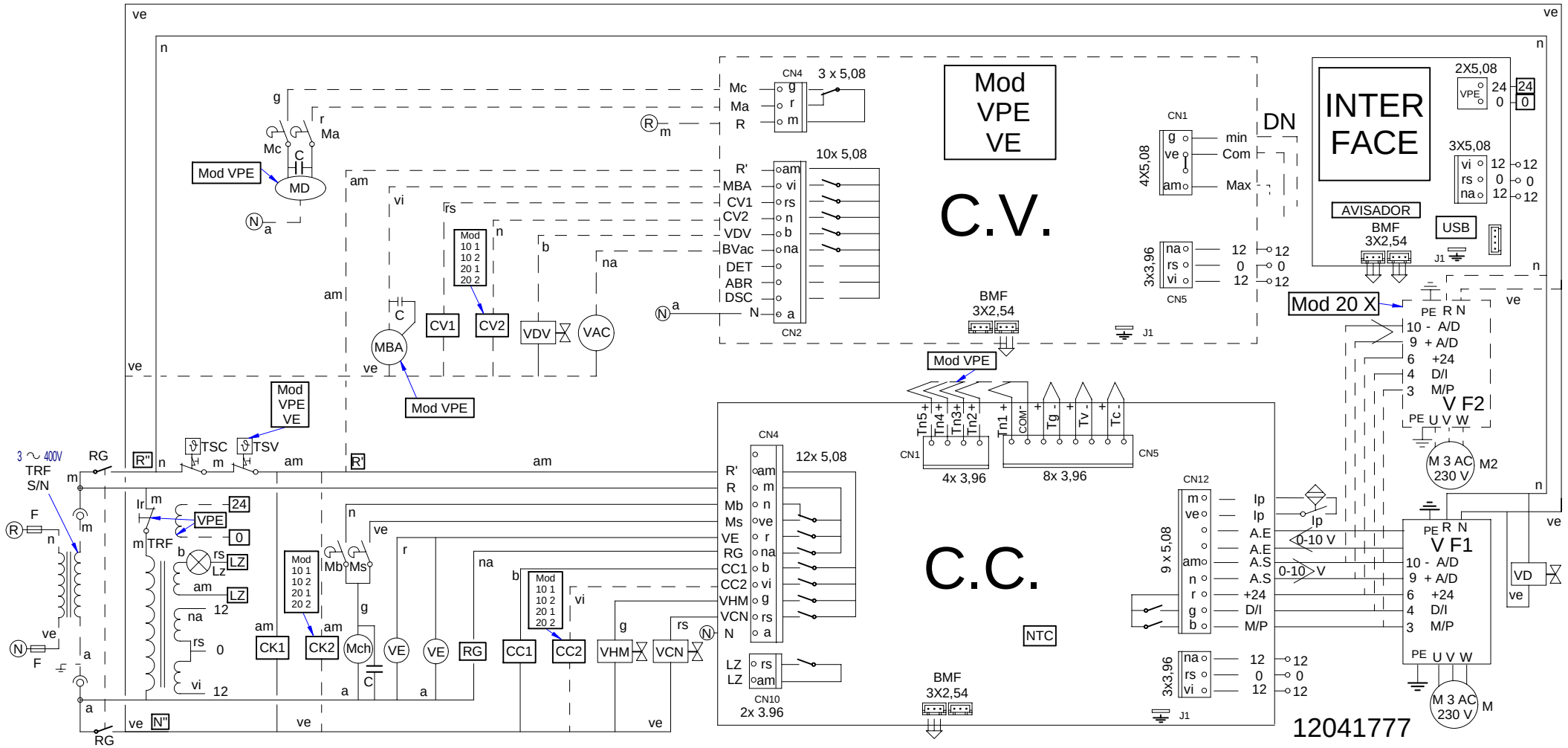

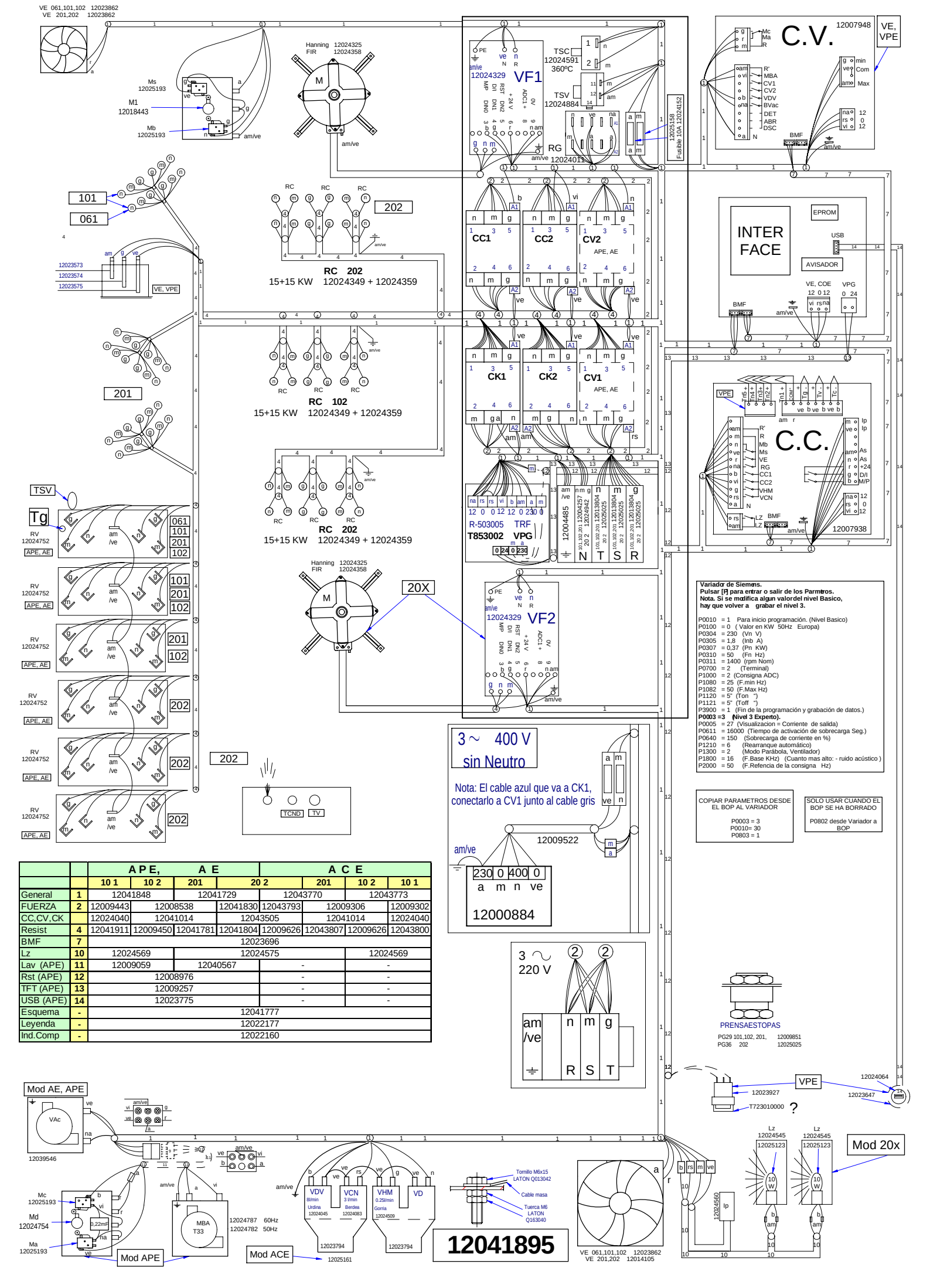

		APE,			A E		ACE		
		10 1	10 2	201	20 2	201	10 2	10 1
General	1	12041848		12041729		12043770		12043773	
FUERZA	2	12009443	12008538		12041830	12043793	12009306		12009302
CC,CV,CK		12024040	12041014		12043505	12041014			12024040
Resist	4	12041911	12009450	12041781	12041804	12009626	12043807	12009626	12043800
BMF	7	12023696							
Lz	10	12024569			12024575				12024569
Lav (APE)	11	12009059		12040567		-		-	
Rst (APE)	12	12008976				-		-	
TFT (APE)	13	12009257				-		-	
USB (APE)	14	12023775				-		-	
Esquema	-	12041777							
Leyenda	-	12022177							
Ind.Comp	-	12022160							

APARATO / APPLIANCE	HORNOS / OVENS	ZONA / ZONE	KIT BARCO / SHIP KIT	PLANO DRAWING	

ITEM	CODIGO REFERENCE	DENOMINACION	DENOMINATION	ACE-061	AE-061	APE-061	ACE-101	AE-101	APE-101			ELIMINADO ELIMINATED	INTRODUCID. INTRODUCED	NOTAS
	12017293	TRANSFORMADOR 400/230 V, 2	TRANSFORMER 400/230 V, 2	1	1	1	1	1	1					
	12095128	CHAPA TRANSFO. BARCO	SHIP TRANSFORMER SHEET	1	1	1	1	1	1					
	12022528	GUIA CONTACTOR L-73	CONTACTOR GUIDE L-73	1	1	1	1	1	1					
	12127889	VARIADOR 400V 50/60Hz 1,10KW U	VARIATOR 400V 50/60Hz 1,10KW U	1	1	1	1	1	1					
	12023549	CABLEADO REGL-CONTFE-6-7-8-9	SOCKET-CONTFE 6-7-8-9 WIRING	1	1	1	1	1	1					
	12009522	CABLEADO 400V SIN NEUTRO	400V WITHOUT NEUTRAL WIRING	1	1	1	1	1	1					
	12093105	ESQ. TEORICO APE, AE 400V S/N	TEORICAL SCHEME 400V N/NEUT	1	1	1	1	1	1					
	12095209	HOJA INFO TRANSFORM. 400V. S/N	INFO. SHEET TRANSF 400V N/NEU	1	1	1	1	1	1					
	12004270	PLANO DE MONTAJE	ASSEMBLY DRAWING	1	1	1	1	1	1					

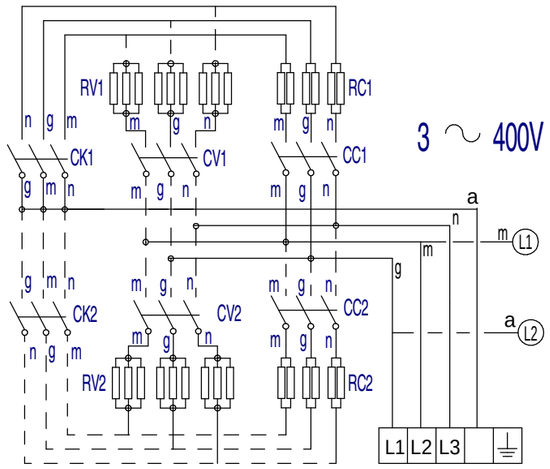

Mod. 101	RC2=3x3KW
Mod. 201	RC2=3x6KW
Mod. 102	RC2=3x5KW
Mod. 202	RC2=6x5KW

Mod. 061, 101	RC1=3x3KW
Mod. 201	RC1=3x6KW
Mod. 102	RC1=3x5KW
Mod. 202	RC1=6x5KW

Mod. VPE, VE,	Mod. 061, 101	RV1=3x3KW
	Mod. 201, 102	RV1=6x3KW
	Mod. 202	RV1=9x3KW
	Mod. 101, 102, 201	RV2=3x3KW
	Mod. 202	RV2=9x3KW

APE 06 1, APE 10 1, APE 10 2, APE 20 1, APE 20 2
AE 06 1, AE 10 1, AE 10 2, AE 20 1, AE 20 2
ACE 06 1, ACE 10 1, ACE 10 2, ACE 20 1, ACE 20 2

400 V sin Neutro

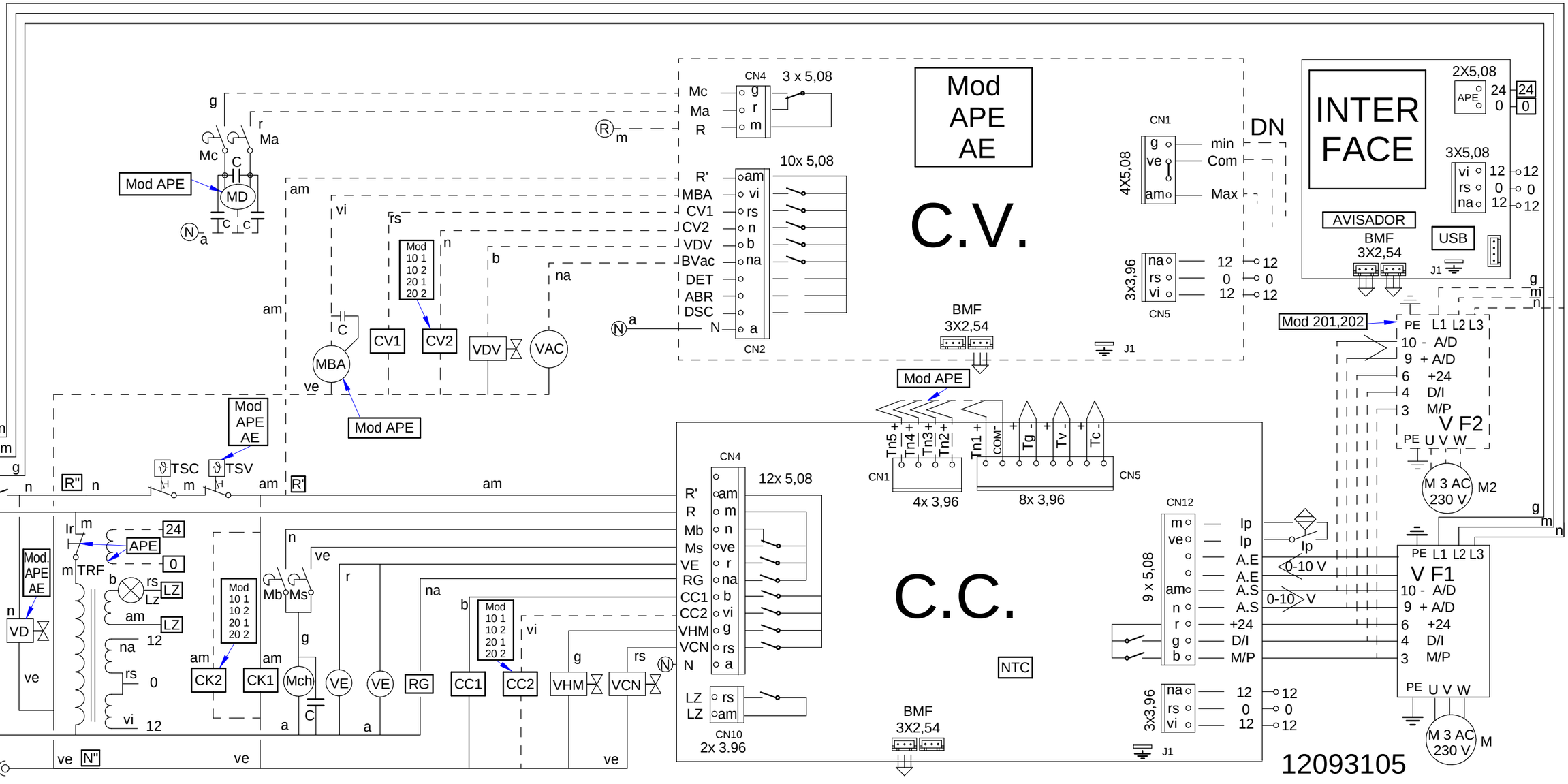

KIT 400V SIN NEUTRO
HORNOS ELECTRICOS
400V KIT, WITHOUT NEUTRAL
ELECTRIC OVENS

12004270

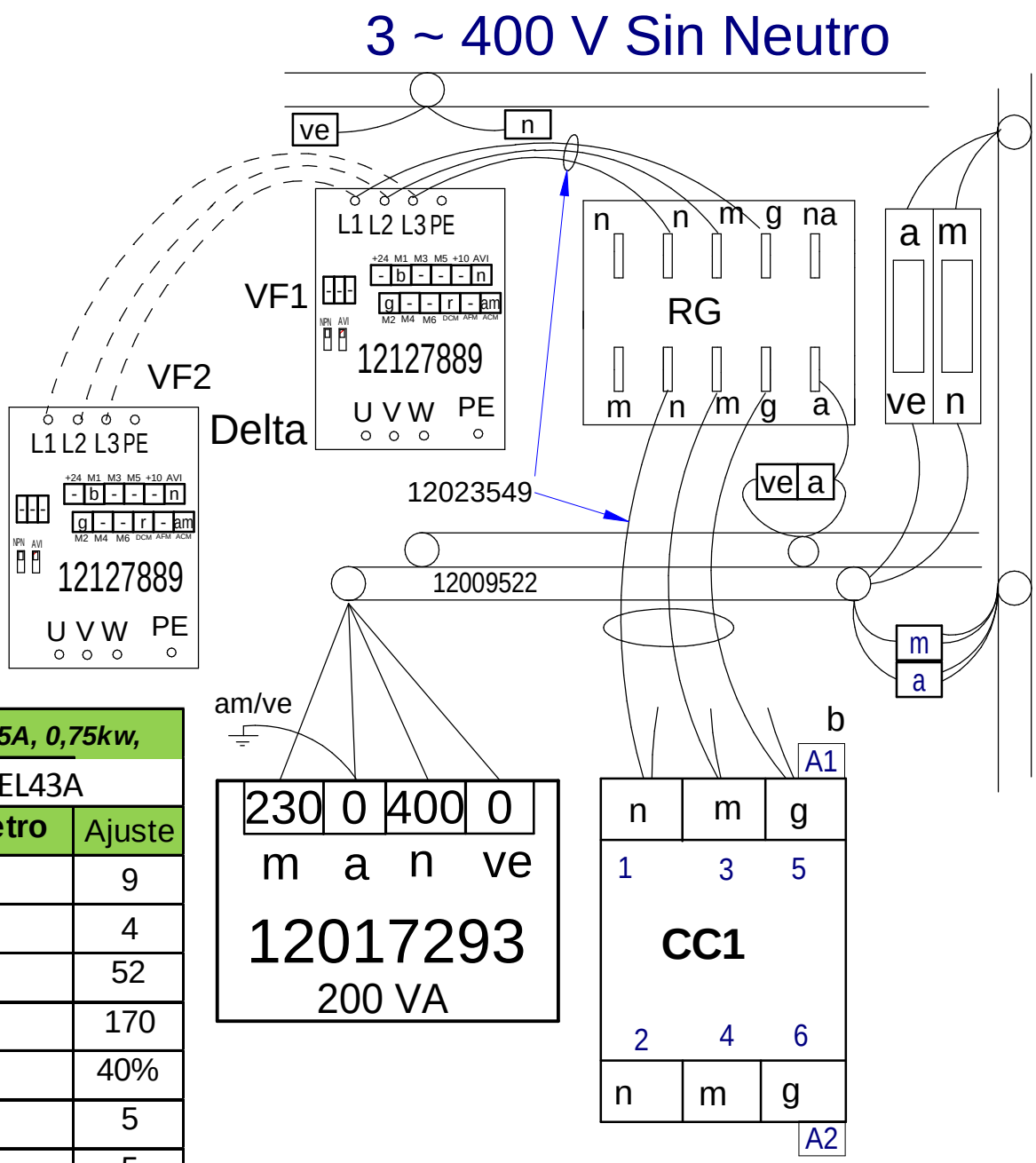

400V, 2,5A, 0,75kw,	
VFD007EL43A	
Parámetro	Ajuste
00.02	9
00.04	4
01-00	52
01-02	170
01-08	40%
01-09	5
01-10	5
02.03	12
02.05	2
04.04	1
06-02	100%
06-06	1
08.15	3

Esquema Electrico 12093105

Nota: El cable azul que va a CK1, conectarlo a CV1 junto al cable gris.

Note: The blue wire that going to CK1, Connect to CV1 with gray wire together.

	ESPAÑOL	FRANÇAIS	ENGLISH	DEUTSCH	ITALIANO
BEC	Bujía Encendido Cámara	Bougie Allumage Chambre	Chamber Spark Plug	Zündkerze Einschalten Garraum	Candela di Accensione Camera
BEV	Bujía Encendido Caldera	Bougie Allumage Chaudière	Boiler Spark Plug	Zündkerze Einschalten Boile	Candela di Accensione Caldaia
C.C.	Control Camara	Contrôle Chambre	Chamber Control	Steuerung Garraum	Controllo Camera
C.E.C	Control Combustión Cámara	Contrôle Combustion Chambre	Chamber Combustion Control	Steuerung Verbrennung Garraum	Controllo Combustione Camera
C.E.V	Control Combustión Caldera	Contrôle Combustion Chaudière	Boiler Combustion Control	Steuerung Verbrennung Boiler	Controllo Combustione Caldaia
C.G.	Control Gas	Contrôle Gaz	Control Gas	Steuern Sie Gas	Controlli il gas
C.V.	Control Caldera	Contrôle Chaudière	Boiler Control	Steuerung Boiler	Controllo Caldaia
CC1, CC2	Contactor Resistencia Cámara	Contacteur Élément Chauffant Chambre	Chamber Heating Element Contactor	Schütz Heizwiderstand Garraum	Contattore Resistenza Camera
CK1, CK2	Contactor General Calentamiento	Relais Élément Chauffant	Heating Element Relay	Relais Heizwiderstand	Relè Resistenza
CV1, CV2	Contactor Resistencias Caldera	Contacteur Élément Chauffant Chaudière	Boiler Heating Element Contactor	Schütz Heizwiderstand Boiler	Contattore Resistenza Caldaia
DEC	Detector Llama Cámara	Détecteur Flamme Chambre	Chamber Flame Detector	Flammendetektor Garraum	Rilevatore di Fiamma Camera
DEV	Detector Llama Caldera	Détecteur Flamme Chaudière	Boiler Flame Detector	Flammendetektor Boiler	Rilevatore di Fiamma Caldaia
DN	Detector Nivel Caldera	Détecteur Niveau Chaudière	Boiler Level Detector	Pegeldetektor Boiler	Rilevatore Livello Caldaia
F	Fusibles	Fusibles	Fuses	Sicherungen	Fusibili
FI	Filtro Interferencias	Filtre Interférences	Interference Filter	Störungsfilter	Filtro Interferenze
FM	Térmico Motor	Thermique Moteur	Thermal Engine	Thermoschalter Motor	Termico Motore
GV1, GV2	Electro válvula Gas Cámara	Électrovanne Gaz Chambre	Chamber Gas Solenoid Valve	Elektroventil Gas Garraum	Elettrovalvola Gas Camera
GV3, GV4	Electro válvula Gas Caldera	Électrovanne Gaz Chaudière	Boiler Gas Solenoid Valve	Elektroventil Gas Boiler	Elettrovalvola Gas Caldaia
Ip	Interruptor Seguridad Puerta	Interrupteur Sécurité Porte	Door Safety Switch	Sicherheitsschalter Tür	Iterruttore Sicurezza Porta
Lz	Luz Interior	Éclairage Intérieur	Inner Light	Innenbeleuchtung	Luce Interna
M, M2	Motor Turbina	Moteur Turbine	Turbine Engine	Motor Turbine	Motore Turbina
Ma	Interruptor Micro Abierto	Microrupteur Ouvert	Open Microswitch	Mikroschalter Geöffnet	Iterruttore Micro Aperto
Mb	Interruptor Micro Bajada	Microrupteur Descente	Drop Microswitch	Mikroschalter Senken	Iterruttore Micro Discesa
Mc	Interruptor Micro Cerrado	Microrupteur Fermé	Closed Microswitch	Mikroschalter Geschlossen	Iterruttore Micro Chiuso
Mch	Motor Chimenea	Moteur Cheminée	Stack Engine	Motor Abluftkamin	Motore Canna
MD	Motor Desague	Moteur évacuation	Drain Engine	Motor Abfluss	Motore scolo
Ms	Interruptor Micro Subida	Microrupteur Montée	Rise Microswitch	Mikroschalter Heben	Iterruttore Micro Salita
PF	Potenciómetro Selector Funciones	Potentiomètre Sélecteur Fonctions	Functions Selector Potentiometer	Potentiometer Funktionswahlschalter	Potenziometro Selettore Funzioni
RC	Resistencias Cámara	Éléments Chauffants Chambre	Chamber Heating Element	Heizwiderstände Garraum	Resistenze Camere
RG	Rele General	Relais Général	Main Relay	Hauptrelais	Relè principale
RV	Resistencias Caldera	Éléments Chauffants Chaudière	Boiler Heating Element	Heizwiderstände Boiler	Resistenze Caldaia
Tc	Sonda Cámara	Sonde Chambre	Chamber Probe	Sonde Garraum	Sonda Camera
TCN	Termostato Condensación	Thermostat Condensation	Condensation Thermostat	Thermostat Kondensierung	Termostato Condensazione
Tg	Sonda Caldera	Sonde Chaudière	Boiler Probe	Sonde Boiler	Sonda Caldaia
Tn	Sonda Núcleo	Sonde Noyau	Core Probe	Kerntemperaturmessonde	Sonda Nucleo
TRF	Transformador	Transformateur	Transformer	Transformator	Trasformatore
TSC	Termostato Seguridad Cámara	Thermostat Sécurité Chambre	Chamber Safety Thermostat	Sicherheitsthermostat Garraum	Termostato Sicurezza Camera
TSV	Termostato Seguridad Caldera	Thermostat Sécurité Chaudière	Boiler Safety Thermostat	Sicherheitsthermostat Boiler	Termostato Sicurezza Caldaia
Tv	Sonda Vapor	Sonde Vapeur	Steam Probe	Sonde Dampf	Sonda Vapore
VAC	Bomba Vaciado	Pompe Vidange	Vacuum Pump	Ablasspumpe	Pompa scarico
MBA	Moto Bomba Aclarado	Pompe Rinçage	Rinsing Pump	Pumpe Ausspülen	Pompa Risciacquo
VC1, VC2	Ventilador Soplante Camara	Ventilateur Soufflant	Blowing Fan	Ventilator Gebläse	Ventilatore Soffiante
VCN	Electro válvula Condensación	Électrovanne Condensation	Condensation Solenoid Valve	Elektroventil Kondensierung	Elettrovalvola Condensazione
VDV	Electro válvula Llenado Caldera	Électrovanne Remplissage Chaudière	Chamber Filling Solenoid Valve	Elektroventil Füllung Boiler	Elettrovalvola di Riempimento Caldaia
VE	Ventilador Cuadro Eléctrico	Ventilateur Tableau Électrique	Fan Switchboard	Ventilator Elektrotafel	Ventilatore Quadro Elettrico
VF1,VF2	Variador de Frecuencia	Variateur Vitesse	Speed Variator	Geschwindigkeitsregler	Variatore di Velocità
VHM	Electro válvula Humidificador	Électrovanne Humidificateur	Humidifier Solenoid Valve	Elektroventil Befeuchtungsvorrichtung	Elettrovalvola Umidificatore
Vv	Ventilador Soplante Caldera	Ventilateur soufflement chaudière	Boiler Blowing Fan	Durchbrennenventilator zum Dampfkessel	Ventilatore Soffiante caldaia
	COLORES	**COULEURS**	**COLOUR**	**FARBEN**	**COLORE**
a	Azul	Bleu	Blue	Blau	Blu
am	Amarillo	Jaune	Yellow	Gelb	Giallo
am/ve	Amarillo/verde	Jaune / vert	Yellow / green	Gelb/grün	Giallo/verde
b	Blanco	Blanc	White	Weiß	Bianco
g	Gris	Gris	Grey	Grau	Grigio
m	Marrón	Marron	Brown	Braun	Marrone
n	Negro	Noir	Black	Schwarz	Nero
na	Naranja	Orange	Orange	Orange	Arancio
r	Rojo	Rouge	Red	Rot	Rosso
rs	Rosa	Rose	Pink	Rosa	Roseo
ve	Verde	Vert	Green	Grün	Verde
vi	Violeta	Violet	Purple	Violett	Viola
					T303042000