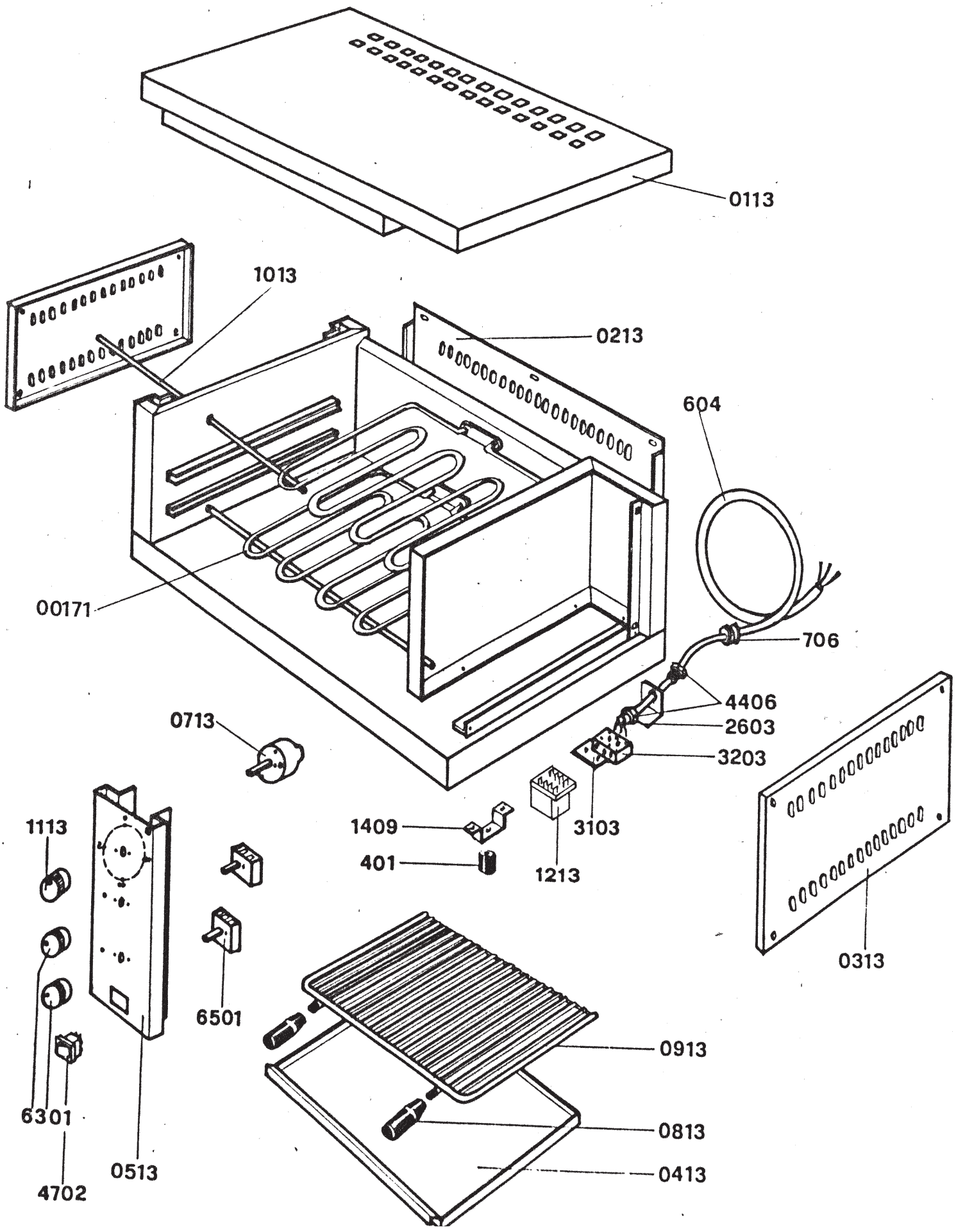
0113
1013
0213
604
00171
706
4406
2603
3203
0713
1409
401
3103
1213
0313
1113
6501
6301
4702
0513
0913
0813
0413

CODICI RICAMBIO PER FINITO / SPARE PARTS FOR THE FINISHED PRODUCT

Aggiornato al/Updated to 27/11/17

Artic./Item	Descrizione/Description	Modello/Model
060430	**TOASTER** **TOASTER**	**TS1/4**

Cons./Recom.	Pos./Posit.	Ricambio/Replacement			Prezzo/Price List
	00000113	RC00000113	CIELO ESTERNO TOASTER	EXTERNAL UPPER PANEL TS	77,46
	00000313	RC00000313	PANNELLO LATERALE TS	SIDE PANEL TS	18,68
	00000401	RC00000401	PIEDINO IN GOMMA SEF-TS-IR	RUBBER FOOT	4,08
	00000413	RC00000413	BACINELLA TOASTER	DRIP TRAY	48,00
	00000706	RC00000706	PASSACAVO	CABLE GLAND	3,97
*	00000713	RC00000713	TIMER	TIMER	28,14
	00000813	RC00000813	IMPUGNATURA	HANDLE	8,38
	00000913	RC00000913	GRIGLIA CROMATA TOASTER	CHROMIUM-PLATED GRID TS	37,51
	00001013	RC00001013	TONDINO SUPPORTO RESISTENZE	HEATING ELEMENT SUPPORT BAR	7,42
	00001113	RC00001113	MANOPOLA PER TIMER TOASTER	KNOB FOR TIMER TS	6,62
*	00001213	RC00001213	RELAIS 16A 220V TOASTER	RELAY	45,34
*	00004702	RC00004702	INTERRUTTORE TS-IR	SWITCH	13,57
	00006301	RC00006301	MANOPOLA SIMMOSTATO	KNOB FOR ENERGY REGULATOR TS-SE-SEF-SEL	5,74
*	00006501	RC00006501	SIMMOSTATO	ENERGY REGULATOR	23,94
*	00171000	RC00171000	RESISTENZA ELETTRICA 1KW 230V	HEATING ELEMENT	48,88
	00304000	RC00304000	MORSETTO EQUIPOTENZIALE COMPLETO	EQUIPOTENTIAL CONNECTING BLOCK	6,62

L'azienda si riserva il diritto di apportare ulteriori aggiornamenti senza preavviso. / The data may be updated without prior warning