**CELULAS /CHILL BLASTER CELLS**
**21-07-14 V0.0**

**MODEL**

| Nº | CODE CÓDIGO | RECOM. | DESCRIPTION | DESCRIPCIÓN | CS-201 |
|---|---|---|---|---|---|
| 1 | 12088001 | | FRONT ROOF CS-201 | FRONTAL TECHO CS-201 | 1 |
| 2 | 12069107 | | BACK ROOF CM-201 | RESPALDO TECHO CELULA CM-201 | 1 |
| 3 | 12088003 | | SIDE ROOF CS-201 | LATERAL TECHO CS-201 | 2 |
| 4 | 12093292 | | DEFLECTOR LEFT CHILL BLASTER | DEFLECTOR IZDO CELULA | 2 |
| 5 | 12068090 | | BOLT FIXING COVER 051 | PERNO FIJ.REJILLA ATM-051 VCH | 4 |
| 6 | 12069406 | | SUPPORT HEART PROBE | SOPORTE SONDA PINCHO ATM | 1 |
| 7 | 12093299 | | DEFLECTOR RIGHT CHILL BLASTER | DEFLECTOR DCHO CELULA | 2 |
| 8 | 12083961 | | CONTROL PANEL CHILL BLASTER | C.MANDOS CELULAS | 1 |
| 9 | 12069475 | | LEFT SUPPORT CONTROL PANEL | SOPORTE IZDO CUADRO DE MANDOS | 1 |
| 10 | 12069476 | | RIGHT SUPPORT CONTROL PANEL | SOPORTE DCHO CUADRO DE MANDOS | 1 |
| 11 | 12068186 | | EVAP.56T3R440A4.5S CM-201 | BAT.56T3R440A4.5S | 1 |
| 12 | 12069710 | | COVER LEFT ELBOW CM-201 | CUBRECODOS IZDO CM-201 | 1 |
| 13 | 12069704 | | COVER RIGHT ELBOW CM-201 | CUBRECODOS DCHO CM-201 | 1 |
| 14 | 12069705 | | FAN SUPPORT CM-201 | SOPORTE VENTILADOR CM-201 | 1 |
| 15 | 12069706 | | EVAPORATOR SUPPORT CM-201 | SOPORTE EVAPORADOR CM-201 | 6 |
| 16 | 12069711 | | COVER BOX EVAPORATOR CM-201 | TAPA CAJA EVAPORADOR CM-201 | 1 |
| 17 | 12069712 | | DRAIN TRAY EVAP.CM-201 | BANDEJA DESAGUE EVAP.CM-201 | 1 |
| 18 | 12067630 | | VALVE TES5 ROSC 1/2-5/8 CHILL BLASTER | VALVULA TES5 ROSC 1/2-5/8 CELU | 1 |
| 19 | 12067631 | | HOLE TES5 Nº1 CHILL BLASTER | ORIFICIO TES5 Nº1 CELULAS | 1 |
| 20 | 12067692 | | PRENSAESTOPAS PG16E GRIS | PRENSAESTOPAS PG16E GRIS | 1 |
| 21 | 12026785 | | FAN D300 220V 50/60 C.2MF | VENT.ATM D300 220V 50/60 C.2MF | 4 |
| 22 | 12068285 | | STEEL HINGE 40X40X1 | BISAGRA INOX 40X40X1(4TALADRO) | 5 |
| 23 | 12037489 | | DRAIN 3/4 | DESAG COMPL 3/4 GRIS+TUERCA | 1 |
| 24 | 12068106 | | NUT THREAD SAE 5/8" | "TUERCA CON ROSCA SAE 5/8""" | 1 |
| 25 | 12068101 | | NUT SAE 1/2 | TUERCA SAE 1/2 | 1 |
| 26 | 12068102 | | NUT SAE 1/4 | TUERCA SAE 1/4 | 1 |
| 27 | 12066767 | | ELBOW H CUH-01 | CODO H CUH-01 TUB.MET22-28/40 | 1 |
| 29 | 12093617 | | ELEMENT THERMOSTAT VALVE TES5 | ELEM.TER.VALV.TES5 | 1 |
| 30 | 12068656 | | FRONT BUMPER CHILL BLASTER | PARAGOLPES FRONTAL CELULA | 2 |
| 31 | 12068313 | | BUMPER FIXING CHILL BLASTER | CASQUIL FIJ.PARAGOLPES CELULAS | 4 |
| 32 | 12067633 | | EXCHANGER HE1.5 | INTERCAMBIADOR HE 1.5 | 1 |
| 34 | 12027512 | | SOLENOID VALVE 1/2 | VALVUL.SOLE.1/2 ODS 220V 50/60 | 1 |
| 35 | 12069980 | | SOLENOID VALVE SUPPORT | SOPORTE VALV.SOLENOIDE | 1 |
| 36 | 12069722 | | EVAPORATOR DECORATIVE TUBES CM-201 | DECORATIVO TUBOS EVAPOR CM-201 | 1 |
| 37 | 12067545 | | FUSE 1A 5x20 | FUSIBLE 1A 5x20 | 1 |
| 38 | 12067547 | | FUSE HOLDER 5x20 | PORTAFUSIB.PANEL5x20 R03.500-1 | 1 |
| 39 | 12067790 | | ELECTRICAL INSTALLATION CHAMBER CM-201 | INSTAL.ELECTR.CAMARA CM-201 | 1 |
| 40 | 12067791 | | ELECTRICAL INSTALLATION MANG. CM-201 | INSTALACION MANGUERA CM-201 | 1 |
| 41 | 12069907 | | TOP ELECTRICAL ELEMENTS | TAPA ELEMENTOS ELECT. | 1 |
| 42 | 12069995 | | ELECTRICAL INSTALLATION BOX CHILL BLASTER | CAJA INSTALACION ELEC. CELULAS | 1 |
| 43 | 12116035 | | PROGRAM PCO SPARE CS CHILL BLASTER | PCO PROGRAMADA CELULAS REFRIG.CS RECAMB. | 1 |
| 44 | 12040126 | | CONNECTOR BOARD PCOXS | CONECT TOR.TAR.CAREL PCOXS | 1 |
| 45 | 12027150 | | DISPLAY 132X64 PGD1 | DISPLAY 132X64 PGD1 | 1 |
| 46 | 12027982 | | HEAT HEART PROBE ATM | SONDA NTC CALEFACTADA ATM | 1 |
| 47 | 12045530 | | SONDA NTC 2,5 MTS (NTC025HP00) | SONDA NTC 2,5 MTS (NTC025HP00) | 2 |
| 48 | 12031414 | | TRANSFORMER.25VA PCOxs | TRANSFOR.25VA PCOxs ATM | 1 |
| 49 | 12040070 | | BOTON AD.FAGOR 670x160 | BOTON AD.FAGOR 670x160 ATM-102 | 1 |
| 50 | 12040085 | | CABLE CONNECTION .pCOxs-DYSPLAY | CABLE CONEX.pCOxs-DYSPLAY ATM | 1 |
| 51 | 12067541 | | BUZZER | ZUMBADOR C.CABLE 511-7636 ATM | 1 |
| 52 | 12092164 | | RAIL TERMINAL PHOUT 4.0 BU AZUL | BORNE CARRIL PHOUT 4.0 BU AZUL | 3 |
| 53 | 12067759 | | PRENSAESTO AG32-GR M32 | PRENSAESTO AG32-GR ATM-102 M32 | 3 |
| 54 | 12067554 | | BREAKER SWITCH 25A | INTERRUPTOR CORTE 25A III VO | 1 |
| 55 | 12067587 | | RAIL TERMINAL UT2.5 | BORNE CARRIL DE PASO UT2.5 | 24 |
| 56 | 12067588 | | RAIL TERMINAL UT6PE | BORNE CARRIL PASO TIERRA UT6PE | 1 |
| 57 | 12034668 | | RELAY RPW508730 220V 2CT | CONT.WEIDM. RPW508730 220V 2CT | 1 |
| 58 | 12069992 | | RAIL TERMINAL SUPPORT | SOPORTE BORNES CARRIL ELEC.CM | 1 |
| 59 | 12069993 | | BREAKER SWITCH SUPPORT | SOPORTE INT.DE CORTE CM | 1 |
| 60 | 12067563 | | HANDLE KCF1PZ PARA IN.CORTE VO | MANETA KCF1PZ PARA IN.CORTE VO | 1 |
| 61 | 12092161 | | RAIL TERMINAL PHOUT 2.5 BU BLUE | BORNE CARRIL PHOUT 2.5 BU AZUL | 7 |
| 62 | 12069746 | | BUMPER SIDE FIXING CM-201 | FIJAC.LATERAL PARAGOLP.CM-201 | 2 |
| 63 | 12066787 | | BUMPER SIDE CM-201 | PARAGOLPES LATERAL CM-201 | 2 |
| 64 | 12066786 | | BUMPER BACK CHILL BLASTER | PARAGOLPES TRASERO 201 | 2 |
| 65 | 12024066 | | TIE BREAKER MAGNETIC | AMARRE INTERRUPTOR MAGNETICO | 1 |
| 66 | 12024477 | | MAGNETIC SWICHT | INTERRUPTOR MAGNETICO | 1 |
| 67 | 12024384 | | MAGNETIC | IMAN | 1 |
| 68 | 12069113 | | MAGNETIC COVER | CUBRE-IMAN MICRO-PUERTA | 1 |
| 69 | BISA14 | | HINGE CHILL BLASTER | BISAGRA PUERTA CELULA | 2 |
| 70 | CONJ03 | | COMPLETE HANDLE CHILL BLASTER | TIRADOR COMPLETO PUERTA CELULA | 1 |
| 71 | 12088032 | | FLOOR ROOM CS-201 | SUELO CAMARA CS-201 | 1 |
| 72 | B1185080 | | TRIANGULAR GASKET CHILL BLASTER | BURLETE TRIANGULAR PUERTA CELULA | 1 |
| 73 | B2185080 | | GASKET DOOR LOW CHILL BLASTER | BURLETE BAJO PUERTA CELULA | 1 |
| 74 | V | | PRESSURE BALANCING VALVE | VALVULA EQUILIBRADORA DE PRESIONES CELULA | 1 |
| | | | | | |

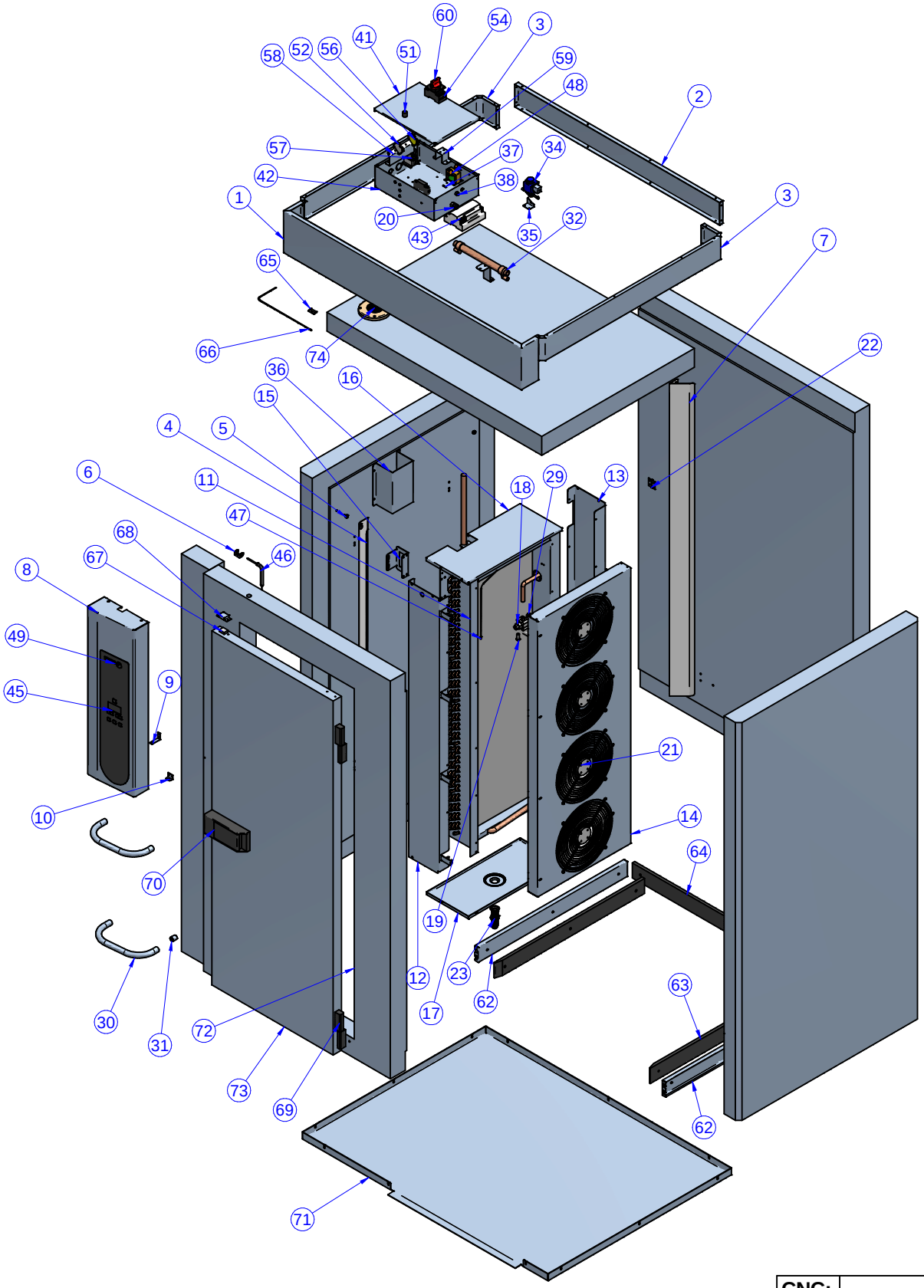


CNC:

| - | SPARE PARTS CS-201 | - | | - INOX | |
|---|---|---|---|---|---|
| Nº | TITLE | QTY | CODE | MATERIAL | TREATMENT |

GENERAL TOLERANCES: ISO 2768-1 Very Coarse

LINEAR

| | Fine | Medium | Coarse | Very Coarse |
|---|---|---|---|---|
| <3mm | ±0.05 | ±0.10 | ±0.15 | |
| 3-6mm | ±0.05 | ±0.10 | ±0.20 | |
| 6-30mm | ±0.10 | ±0.20 | ±0.50 | |
| 30-120mm | ±0.15 | ±0.30 | ±0.80 | |
| 120-400mm | ±0.20 | ±0.50 | ±1.20 | |
| 400-1000mm | ±0.30 | ±0.80 | ±2.00 | |
| 1000-2000mm | ±0.50 | ±1.20 | ±3.00 | |

ANGULAR

| | Fine | Medium | Coarse | Very Coarse |
|---|---|---|---|---|
| <10mm | ±1º | | ±1º30' | ±3º |
| 10-50mm | ±30' | | ±1º | ±2º |
| 50-120mm | ±20' | | ±30' | ±1º |
| 120-400mm | ±10' | | ±15' | ±30' |
| >400mm | ±5' | | ±10' | ±20' |

GENERAL TOLERANCE FOR FORM AND POSITION: ISO 2768-2

| DESIGNED BY | VALIDATED BY | DATE |
|---|---|---|
| J.A.Pulido | | 24/07/2014 |

| | |
|---|---|
| SHEET FORMAT: | A4 |
| DESING CENTER: | |
| MAT STATUS: | |
| DOC STATUS: | |
| SHEET: | 1 / 1 |
| SCALE: | 1:1 |

| VERSION | 00 | REVISION | |
|---|---|---|---|

PROPOSED BY: | ISSUE DATE: