Modello/Type: **60/60 FTE... - FTRE... - FTRRE...**

cod./num. 2531450.00

data/date: 20/06/2013

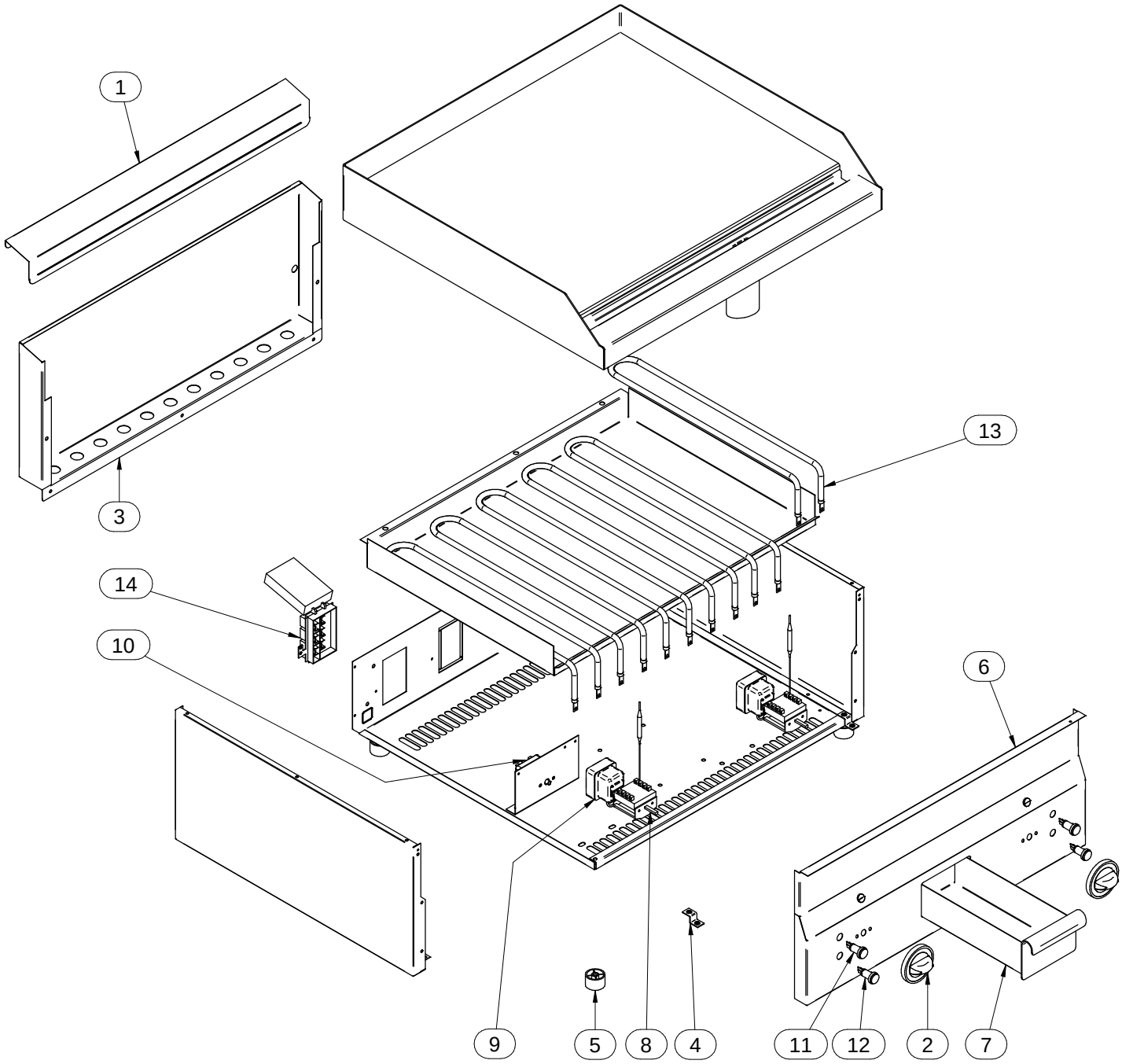

Modello Type:	60/60 FTE... - FTRE... - FTRRE...				cod. / num.	2531451.00
					data / date:	20/06/2013
POS. ITEM	CODICE CODE	DESCRIZIONE	DESCRIPTION	DENOMINATION	BENENNUNG	NOTE / NOTES
1	611.733.00	ALZATINA	UPSTAND	DOSSERET	AUFKANTUNG	
2	612.003.00	MANOPOLA	KNOB	BOUTON	DREHKNOPF	
3	621.752.00	PANNELLO POSTERIORE	BACK PANEL	PANNEAU POSTERIEUR	HINTERBRETT	
4	256.002.00	STAFFA FISSAGGIO CRUSCOTTO	CONTROL PANEL FIXING BRACKET	EQUERRE FIXATION BANDEAU	BEFESTIGUNGSWINKEL BEDIENBLENDE	
5	651.001.00	PIEDINO	FOOT	PIED	STELLFUSS	FROM - 01/1999 TO - 05/2013
	651.001.13	PIEDINO	FOOT	PIED	STELLFUSS	FROM - 06/2013 TO - ….....
6	256.096.00	CRUSCOTTO	CONTROL PANEL	BANDEAU	BEDIENBLENDE	
7	611.803.00	CASSETTO	DRAWER	TIROIR	SCHUBLADE	
8	661.000.00	COMMUTATORE	CHANGE-OVER SWITCH	COMMUTATEUR	UMSCHALTER	
9	661.007.00	TERMOSTATO	THERMOSTAT	THERMOSTAT	THERMOSTAT	
10	661.045.00	TERMOSTATO SICUREZZA	SAFETY THERMOSTAT	THERMOSTAT DE SECURITE	TEMPERATURBEGRENZER	
11	663.043.00	SPIA VERDE	GREEN INDICATOR LIGHT	LAMPE TEMOIN VERTE	GRUENE KONTROLLAMPE	
12	663.044.00	SPIA ARANCIO	ORANGE INDICATOR LIGHT	LAMPE TEMOIN ORANGE	ORANGE KONTROLLAMPE	
13	665.057.00	RESISTENZA	HEATING ELEMENT	RESISTANCE	HEIZKOERPER	
14	663.040.00	MORSETTIERA	TERMINAL BOARD	BORNES	KLEMMENBRETT	
15						
16						
17						
18						
19						