Mod./Type: **_70/... PCGS - CFGS - CFGES**

SIMPLE

cod./num. 2531586.00

data/date: 06/06/2014

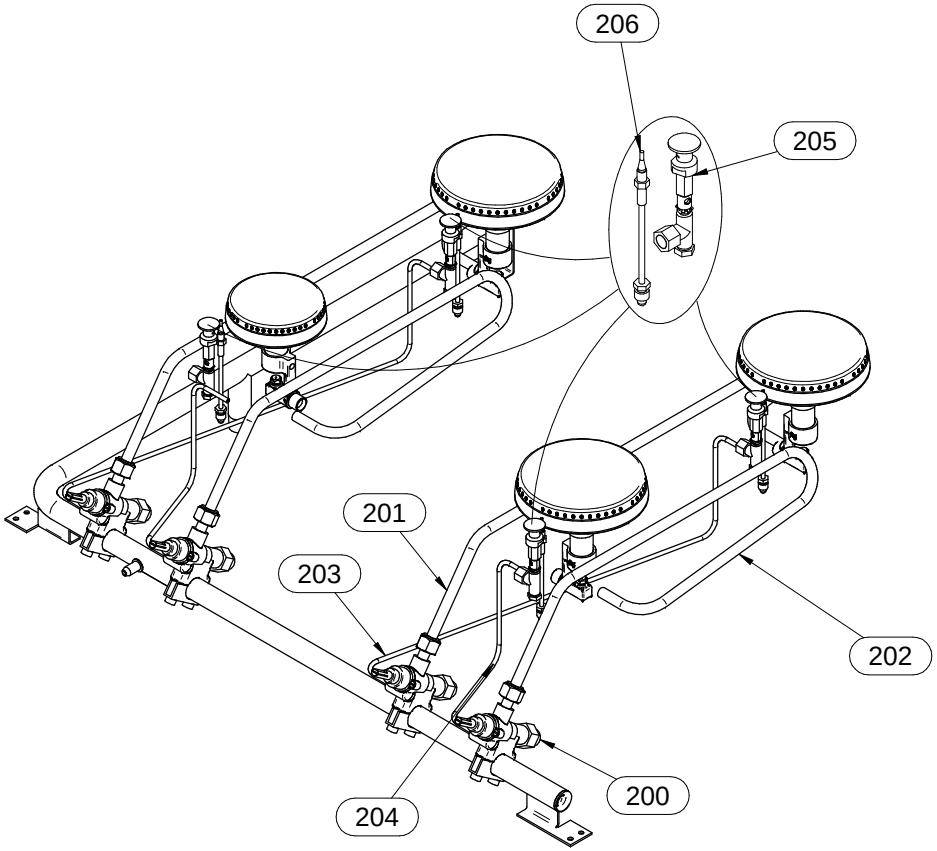

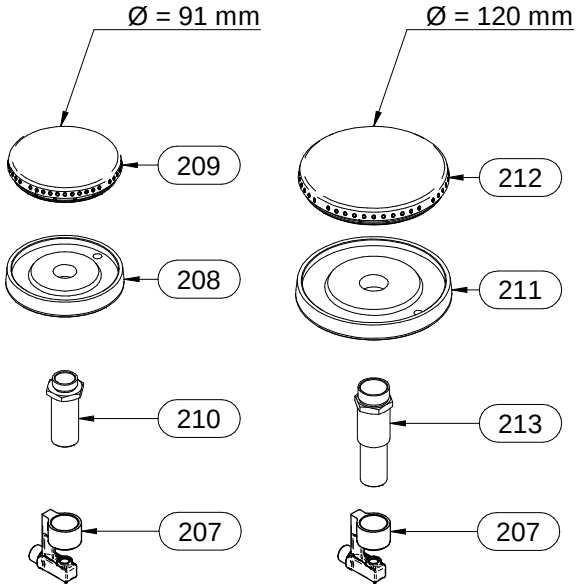

Mod./Type: **EM70/80 CFGES - EM70/120 CFGES**

SIMPLE

cod./num. 2531659.00

data/date: 06/06/2014

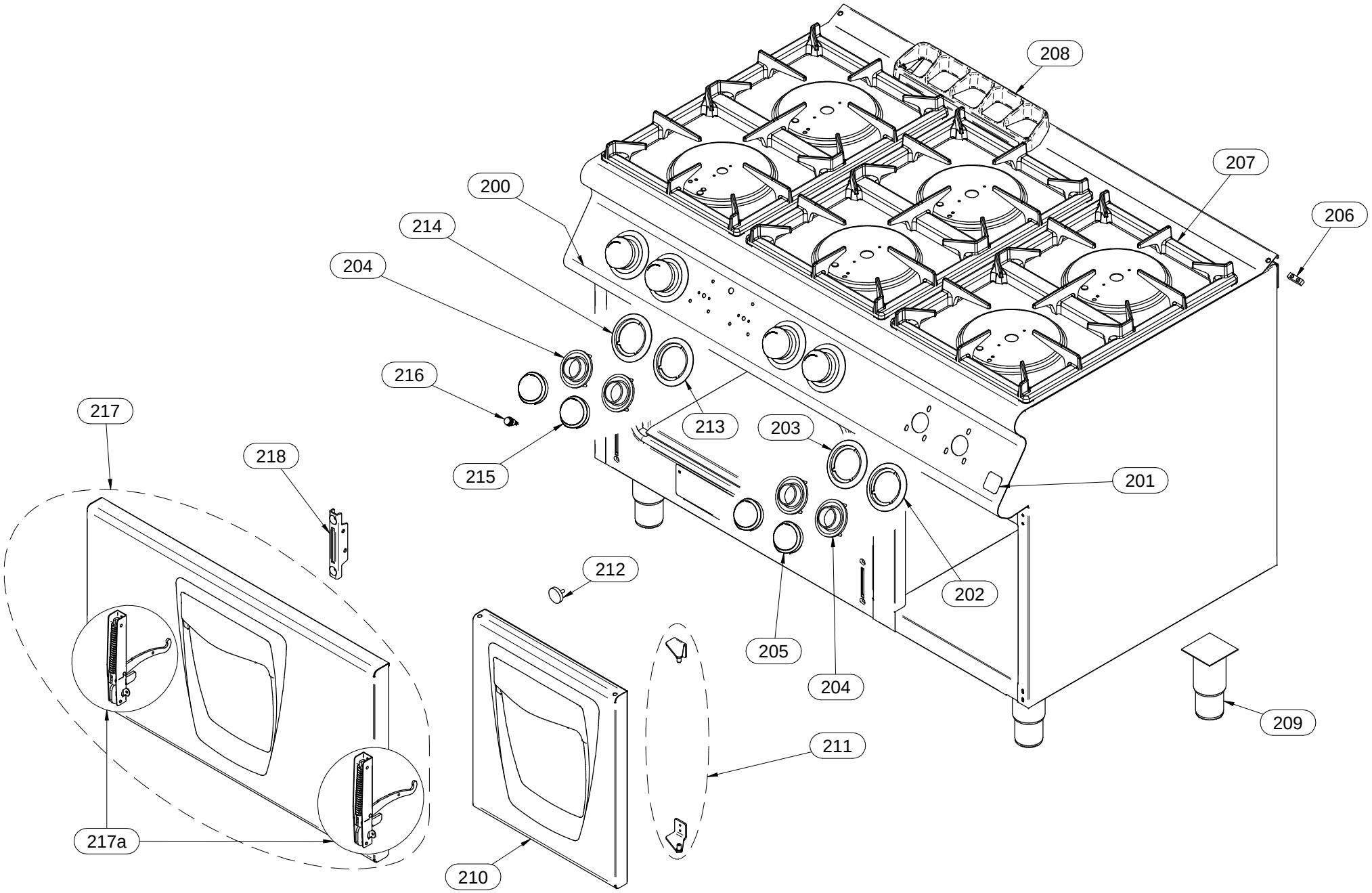

Mod./Type: **_70/... ...F...E... - _90/... ...F...E...**

ELECTRIC OVEN

cod./num. 2531630.00

data/date: 06/06/2014

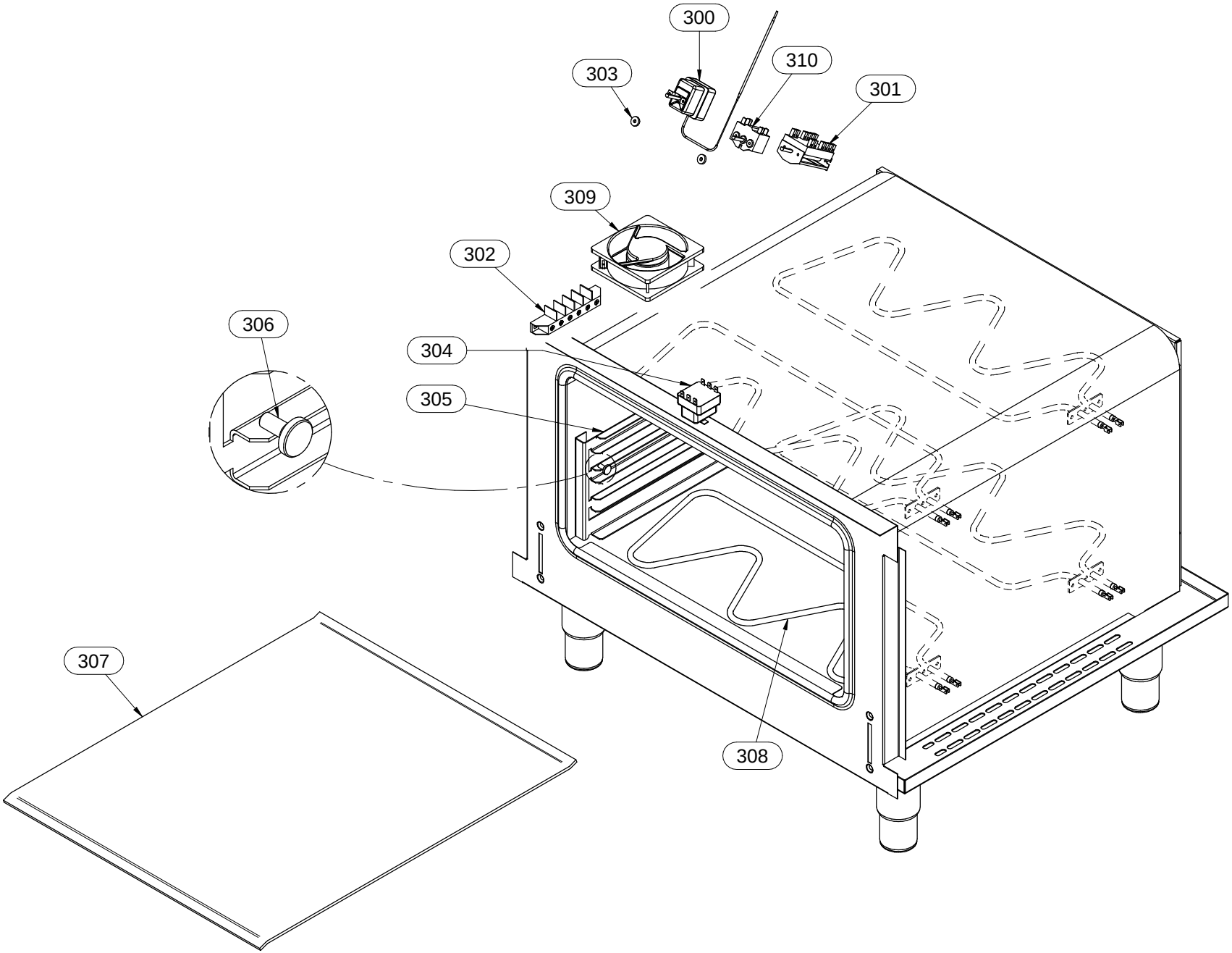

Mod.:	_70/... PCGS - ... CFGS - ... CFGES SIMPLE			cod. / num. 2531587.00 data / date 06/06/2014 rif. / ref. 2531586.00		...70/40 PCGS...	...70/80 PCGS... - ... CFGS - ... CFGES	...70/120 PCGS... - ... CFGS - ... CFGES	NOTE
POS.	DESCRIZIONE	DESCRIPTION	DENOMINATION	BENENNUNG	COD.	Q. ty			
100	RUBINETTO GAS	GAS TAP	ROBINET GAZ	GASHAHN	671.088.00	2	4	6	
101	TUBO GAS	GAS PIPE	TUBE GAZ	GASROHR	256.223.00	1	2	3	
102	TUBO GAS	GAS PIPE	TUBE GAZ	GASROHR	256.224.00	1	2	3	
103	TUBO GAS	GAS PIPE	TUBE GAZ	GASROHR	256.225.00	1	2	3	
104	TUBO GAS	GAS PIPE	TUBE GAZ	GASROHR	256.226.00	1	2	3	
105	GRUPPO PILOTA	PILOT GROUP	GROUPE VEILLEUSE	ZÜNDBRENNER GRUPPE	256.228.00	2	4	6	
106	TERMOCOPPIA	THERMOCOUPLE	THERMOCOUPLE	THERMOELEMENT	256.227.00	2	4	6	
107	PORTAUGELLO	NOZZLE HOLDER	PORTE-INJECTEUR	SPRITZDÜSE-TRÄGER	672.157.00	2	4	6	
108	BRUCIATORE 3,5kW	BURNER 3,5kW	BRULEUR 3,5kW	BRENNER 3,5kW	672.162.00	1	1	1	
109	SPARTIFIAMMA	FLAMESPREADER	CHAPEAU BRULEUR	FLAMMENTEILER	682.007.00	1	1	1	
110	VENTURI PER BRUCIATORE	VENTURI TUBE FOR BURNER	TUBE DE VENTURI POUR BRÛLEUR	VENTURI-DÜSE FÜR BRENNER	672.163.00	1	1	1	
111	BRUCIATORE 6kW	BURNER 6kW	BRULEUR 6kW	BRENNER 6kW	672.155.00	1	3	5	
112	SPARTIFIAMMA	FLAMESPREADER	CHAPEAU BRULEUR	FLAMMENTEILER	682.006.00	1	3	5	
113	VENTURI PER BRUCIATORE	VENTURI TUBE FOR BURNER	TUBE DE VENTURI POUR BRÛLEUR	VENTURI-DÜSE FÜR BRENNER	672.156.00	1	3	5	
114									
115									
116									
117									
118									
119									
120									
121									
122									
123									
124									
125									
126									
127									
128									
129									
130									
131									
132									
133									
134									
135									
136									

Mod.:	_70/... CFGES SIMPLE			cod. / num. 2531660.00 data / date 06/06/2014 rif. / ref. 2531659.00		EM70/80 CFGES	EM70/120 CFGES	NOTE	
POS.	DESCRIZIONE	DESCRIPTION	DENOMINATION	BENENNUNG	COD.	Q. ty			
200	CRUSCOTTO	CONTROL PANEL	BANDEAU	BEDIENBLENDE	9111318.00	1			
					9111319.00		1		
201	MARCHIO	BRAND NAME	MARQUE	MARKENZEICHEN	982.021.00	1	1	**FROM: 15.12.2011**	**TO: 31.01.2014**
					982.023.00	1	1	**FROM: 01.02.2014**	**TO:...**
202	SERIGRAFIA	SCREEN PRINT	SÉRIGRAPHIE	SIEBDRUCK	910.163.00	2	3		
203	SERIGRAFIA	SCREEN PRINT	SÉRIGRAPHIE	SIEBDRUCK	910.164.00	2	3		
204	LABIRINTO	LABYRINTH	LABYRINTHE	LABYRINTH	256.235.00	6	8		
205	MANOPOLA	KNOB	BOUTON	DREHKNOPF	256.217.00	4	6		
206	PIASTRINA GIUNZIONE	FIXING PLATE	PLAQUETTE FIXAGE	BEFESTIGUNGSPLATTE	941.130.00	1	1		
207	GRIGLIA	GRID	GRILLE	ROST	681.070.00	2	3		
208	GRIGLIA CAMINO	FLUE GRIDDLE	GRILLE POUR CHEMINÉE	KAMINROST	982.012.00	1	1		
209	PIEDINO	FOOT	PIED	STELLFUSS	912.090.00	4	4	**FROM: 15.12.2011**	**TO: 17.05.2013**
					912.090.14	4	4	**FROM: 18.05.2013**	**TO:...**
210	PORTA	DOOR	PORTE	TÜR	256.215.00	-	1		
211	COPPIA CERNIERE	GASKETS PAIR	COUPLE CHARNIÈRES	SCHARNIERPAAR	256.216.00	-	1		
212	MAGNETE	MAGNET	MAGNÉTO	MAGNET	684.007.00	-	1	**FROM: 15.12.2011**	**TO: 01.01.2014**
					984.006.00	-	1	**FROM: 02.01.2014**	**TO:...**
213	SERIGRAFIA	SCREEN PRINT	SÉRIGRAPHIE	SIEBDRUCK	910.193.00	1	1		
214	SERIGRAFIA TERMOSTATO	THERMOSTAT SCREEN PRINT	SÉRIGRAPHIE THERMOSTAT	SIEBDRUCK DES THERMOSTAT	910.175.00	1	1		
215	MANOPOLA FORNO	OVEN KNOB	BOUTON DU FOUR	OFENKNOPF	256.234.00	2	2		
216	LAMPADA SPIA ARANCIO	ORANGE INDICATOR LIGHT	LAMPE TEMOIN ORANGE	ORANGE KONTROLLAMPE	963.013.00	1	1		
217	PORTA	DOOR	PORTE	TÜR	256.248.00	1	1		
217a	CERNIERA	JOINT	CHARNIERE	SCHARNIER	684.030.00	2	2		
218	PORTARULLINO	ROLL HOLDER	PORTE-AIGUILLE DE ROULEMENT	ROLLE-TRÄGER	684.011.00	2	2		
219									
220									
221									
222									
223									
224									
225									
226									
227									
228									

Mod.:	_70/… …F…E… - _90/… …F…E… ELECTRIC OVEN			cod. / num. 2531631.00 data / date 02/05/2014 rif. / ref. 2531630.00		_70/……FGE…	_70/……FE…	_70/… TPFE…	_90/……FGE…	_90/160 …FGE…	_90/……FE…	_90/… TPFE…	NOTE
POS.	DESCRIZIONE	DESCRIPTION	DENOMINATION	BENENNUNG	COD.	Q. ty							
300	TERMOSTATO	THERMOSTAT	THERMOSTAT	THERMOSTAT	661.114.00	1	1	1	1	2	1	1	
301	COMMUTATORE FORNO	OVEN CHANGE-OVER SWITCH	COMMUTATEUR FOUR	UMSCHALTER BACKOFEN	661.113.00	1	1	1	1	2	1	1	
302	MORSETTIERA	TERMINAL BOARD	BORNES	KLEMMENBRETT	M566050500	1	-	-	1	1	-	-	
303	GUARNIZIONE	WASHER	GUARNITURE	DICHTUNGSRING	953.020.00	2	2	2	2	4	2	2	
304	TERMOSTATO SICUREZZA	SAFETY THERMOSTAT	THERMOSTAT DE SECURITE	TEMPERATURBEGRENZER	661.115.00	1	1	1	1	2	1	1	
305	REGGIGRIGLIA	TRAY RACK	PORTE-PLAQUES	EINHÄNGEGESTELL	622.967.00	2	2	2	2	4	2	2	
306	FISSAGGIO REGGIGRIGLIA	TRAY RACK FIXING	FIXAGE PORTE-PLAQUES	BEFESTIGUNG DES EINHÄNGEGESTELLS	641.090.00	4	4	4	4	8	4	4	
307	SUOLA FORNO	INNER OVEN SOLE	SOLE DU FOUR	OFENINNENBODEN	635.029.00	1	1	1	1	2	1	1	
308	RESISTENZA FORNO	OVEN HEATING ELEMENT	RESISTANCE DU FOUR	BACKOFEN HEINZELEMENT	965.060.00	4	4	4	4	8	4	4	
309	VENTOLA	FAN	VENTILATEUR	LÜFTERRAD	764.055.00	-	-	1	-	-	-	1	
310	COMMUTATORE	CHANGE-OVER SWITCH	COMMUTATEUR	UMSCHALTER	661.093.00	-	-	1	-	-	-	1	
311													
312													
313													
314													
315													
316													
317													
318													
319													
320													
321													
322													
323													
324													
325													
326													
327													
328													
329													
330													
331													
332													
333													
334													
335													
336													
337													
338													
339													
340													