DESPIECE TECNICO / SPARE PARTS BOM

# Cocinas a Gas
# Gas ranges
# Fourneaux à gaz
# Gas-herde
# Cucine a gas
# Fogão a gás

## GAMA 900 RANGE

## Modelos / Models:

**CG9-20**
**CG9-40**
**CG9-60**
**CG9-41**
**CG9-61**
**CG9-82**
**CGE9-41**
**CG9-61 OP**

***Junio 2009 June***

***Revisado Julio 2014 July Revised***

FAGOR

FAGOR INDUSTRIAL

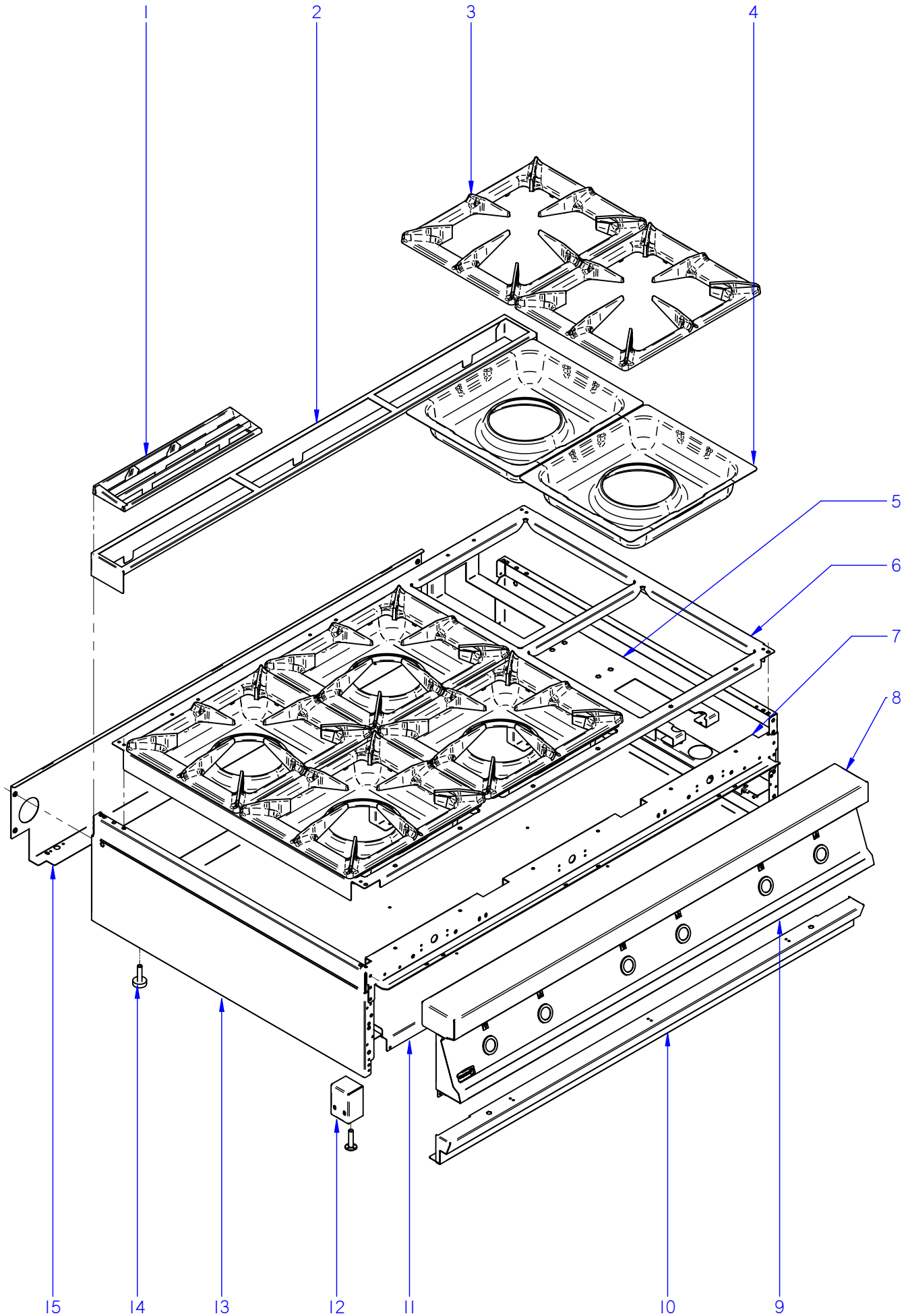


ITEM MARCADO EN COLOR = REPUESTO RECOMENDADO
COLOURED ITEM = RECOMMENDED SPARE PART

| N plano | Firma | Fecha | Aparato | MUEBLE | Lamina | |
|---|---|---|---|---|---|---|
| C-2340 | | 2009-06 | COCINAS CG9-20 / CG9-40 / CG9-60 | | 1 | Fagor Industrial S.Coop. FAGOR Oñate |

| MOD. | COCINAS | ZONA | MUEBLE / UNIT | PLANO | C-2340 |
|---|---|---|---|---|---|

| ITEM | CODIGO | DENOMINACION | TEXTO | CG9-20 | CG9-40 | CG9-60 | | | | | NOTAS |
|---|---|---|---|---|---|---|---|---|---|---|---|
| 1 | R205425000 | EMBELLECEDOR ESMALTE | ENAMEL TRIM | 1 | 2 | 3 | | | | | |
| 2 | R205438000 | SOPORTE EMBELLECEDOR 0,5 M | TRIM SUPPORT 0.5 M | 1 | _ | _ | | | | | |
| 2 | R205439000 | SOPORTE EMBELLECEDOR 1 M | TRIM SUPPORT 1 M | _ | 1 | _ | | | | | |
| 2 | R205440000 | SOPORTE EMBELLECEDOR 1,5 M | TRIM SUPPORT 1.5 M | _ | _ | 1 | | | | | |
| 3 | U035409000 | PARRILLA GAMA 900 | GRILL 900 RANGE | 2 | 4 | 6 | | | | | |
| 4 | U025473000 | BACINETA QUEMADOR G900 | BASIN BURNER G900 | 2 | 4 | 6 | | | | | |
| 5 | U022617000 | LISTON SOP. QUEMADOR G900 | BURNER SUPPORT STRIP | 1 | 2 | 3 | | | | | ELIMINADO 31.01.11 |
| 5 | U022651000 | LISTON SOP. QUEMADOR G900 | BURNER SUPPORT STRIP | 1 | 2 | 3 | | | | | INTRODUCIDO 31.01.11 |
| | Q221343000 | REMACHE EXAGONAL M6 | HEXAGONAL RIVET M6 | 4 | 8 | 12 | | | | | |
| | Q221342000 | REMACHE EXAGONAL M5 | HEXAGONAL RIVET M5 | 4 | 6 | 8 | | | | | |
| 6 | U025474000 | MESA 0,5 M G900 | BENCH 0.5 M G900 | 1 | _ | _ | | | | | |
| 6 | U025472000 | MESA 1 M G900 | BENCH 1 M G900 | _ | 1 | _ | | | | | |
| 6 | U025475000 | MESA 1,5 M G900 | BENCH 1.5 M G900 | _ | _ | 1 | | | | | |
| | Q152004000 | TORNIL, APLASTADO M5x13 A304 | FLAT HEADED BOLT M5x13 A304 | 8 | 10 | 12 | | | | | |
| | Q221342000 | REMACHE EXAGONAL M5 | HEXAGONAL RIVET M5 | 2 | 4 | 6 | | | | | |
| 7 | X162690000 | ESCUA INTER AMAR ANTE 0,5 M | BRACKET INTER FASTE. FRONT | 1 | _ | _ | | | | | |
| 7 | U022632000 | ESCUA INTER AMAR ANTE 1 M | BRACKET INTER FASTE. FRONT | _ | 1 | _ | | | | | |
| 7 | U032625000 | ESCUA INTER AMAR ANTE 1,5 M | BRACKET INTER FASTE. FRONT | _ | _ | 1 | | | | | |
| | Q221342000 | REMACHE EXAGONAL M5 | HEXAGONAL RIVET M5 | 4 | 4 | 6 | | | | | |
| | Q012032000 | TORNILLO EXAGONAL M5x15 | HEXAGONAL BOLT M5x15 | 6 | 6 | 6 | | | | | |
| | Q152004000 | TORNIL, APLASTADO M5x13 A304 | FLAT HEADED BOLT M5x13 A304 | 4 | 6 | 9 | | | | | |
| | Q302022000 | ARANDELA 16x6x1,2 A304 | WASHER 16x6x1.2 A304 | 4 | 6 | 9 | | | | | |
| 8 | R045416000 | ANTERIOR MESA 0,5 M | BENCH FRONT 0.5 M | 1 | _ | _ | | | | | |
| 8 | S105402000 | ANTERIOR MESA 1 M | BENCH FRONT 1 M | _ | 1 | _ | | | | | |
| 8 | U035406000 | ANTERIOR MESA 1,5 M | BENCH FRONT 1.5 M | _ | _ | 1 | | | | | |
| 9 | U012809000 | PORTAMANDOS COMPL. CG9-20 | COMPL. CONTROL HOLDER CG9 | 1 | _ | _ | | | | | |
| 9 | U022856000 | PORTAMANDOS COMPL. CG9-40 | COMPL. CONTROL HOLDER CG9 | _ | 1 | _ | | | | | |
| 9 | U032814000 | PORTAMANDOS COMPL. CG9-60 | COMPL. CONTROL HOLDER CG9 | _ | _ | 1 | | | | | |
| | U022836000 | ESCUDO FAGOR | FAGOR EMBLEM | 1 | 1 | 1 | | | | | |
| | Q221023000 | CLIP SUJECIÓN RÁPIDA Ø5 | RAPID CONNECT CLIP Ø5 | 2 | 2 | 2 | | | | | |
| | | | | | | | | | | | |

| MOD. | COCINAS | ZONA | MUEBLE / UNIT | PLANO | C-2340 |
|---|---|---|---|---|---|

| ITEM | CODIGO | DENOMINACION | TEXTO | CG9-20 | CG9-40 | CG9-60 | | | | | NOTAS |
|---|---|---|---|---|---|---|---|---|---|---|---|
| 10 | R062805000 | ZOCALO 0,5 M | SKIRTING 0.5 M | 1 | _ | _ | | | | | |
| 10 | H352817000 | ZOCALO BAÑO MARIA | BAIN MARIE SKIRTING | | 1 | _ | | | | | |
| 10 | U032809000 | ZOCALO 1,5 M | SKIRTING 1.5 M | _ | _ | 1 | | | | | |
| | Q419005000 | REMACHE 4x8 ALMG3 / ALUMINIO | RIVET 4X8 ALMG3 / ALUMINIUM | 2 | 2 | 2 | | | | | |
| 11 | U022631000 | BASE 0,5 M GAS | BASE 0.5 M GAS | 1 | _ | _ | | | | | |
| 11 | U022629000 | BASE 1 M GAS | BASE 1 M GAS | _ | 1 | _ | | | | | |
| 11 | U032622000 | BASE 1,5 M GAS | BASE 1.5 M GAS | _ | _ | 1 | | | | | |
| | Q419005000 | REMACHE 4x8 ALMG3 / ALUMINIO | RIVET 4X8 ALMG3 / ALUMINIUM | 4 | 9 | 16 | | | | | |
| 12 | H012805000 | ESCUADRA AMARRE PATA | LEG FASTENING BRACKET | 2 | 2 | 2 | | | | | |
| | Q162030000 | TUERCA EXAGONAL M5 | HEXAGONAL NUT M5 | 4 | 4 | 4 | | | | | |
| | Q302022000 | ARANDELA 16x6x1,2 A304 | WASHER 16x6x1.2 A304 | 4 | 4 | 4 | | | | | |
| | Q221345000 | REMACHE EXAGONAL M10 | HEXAGONAL RIVET M10 | 2 | 2 | 2 | | | | | |
| 13 | R062811000 | PANEL LATERAL IZQUIERDO G900 | LEFT SIDE PANEL G900 | 1 | 1 | 1 | | | | | |
| S/Nº | R062810000 | PANEL LATERAL DERECHO G900 | RIGHT SIDE PANEL G900 | 1 | 1 | 1 | | | | | |
| | Q221342000 | REMACHE EXAGONAL M5 | HEXAGONAL RIVET M5 | 2 | 6 | 6 | | | | | |
| | Q221343000 | REMACHE EXAGONAL M6 | HEXAGONAL RIVET M6 | 4 | 10 | 10 | | | | | |
| 14 | Z200107000 | PATA | LEG | 4 | 4 | 4 | | | | | |
| | Q221345000 | REMACHE EXAGONAL M10 | HEXAGONAL RIVET M10 | 4 | 4 | 4 | | | | | |
| S/Nº | X010503000 | CIERRE MUELLE | LOCK SPRING | 3 | 4 | 6 | | | | | |
| | Q419007000 | REMACHE TUBULAR C/V Ø2x6 | TUBULAR RIVET C/V Ø2x6 | 6 | 8 | 12 | | | | | |
| 15 | H012824000 | PANEL POSTERIOR 0,5 M | REAR PANEL 0.5 M | 1 | _ | _ | | | | | |
| 15 | H022809000 | PANEL POSTERIOR 1 M | REAR PANEL 1 M | _ | 1 | _ | | | | | |
| 15 | U572850000 | PANEL POSTERIOR 1,5 M | REAR PANEL 1.5 M | _ | _ | 1 | | | | | |
| | Q419005000 | REMACHE 4x8 ALMG3 / ALUMINIO | RIVET 4X8 ALMG3 / ALUMINIUM | 2 | 4 | 4 | | | | | |
| | Q302022000 | ARANDELA 16x6x1,2 A304 | WASHER 16x6x1.2 A304 | 4 | 4 | 6 | | | | | |
| | | | | | | | | | | | |
| | | | | | | | | | | | |
| | | | | | | | | | | | |
| | | | | | | | | | | | |
| | | | | | | | | | | | |
| | | | | | | | | | | | |

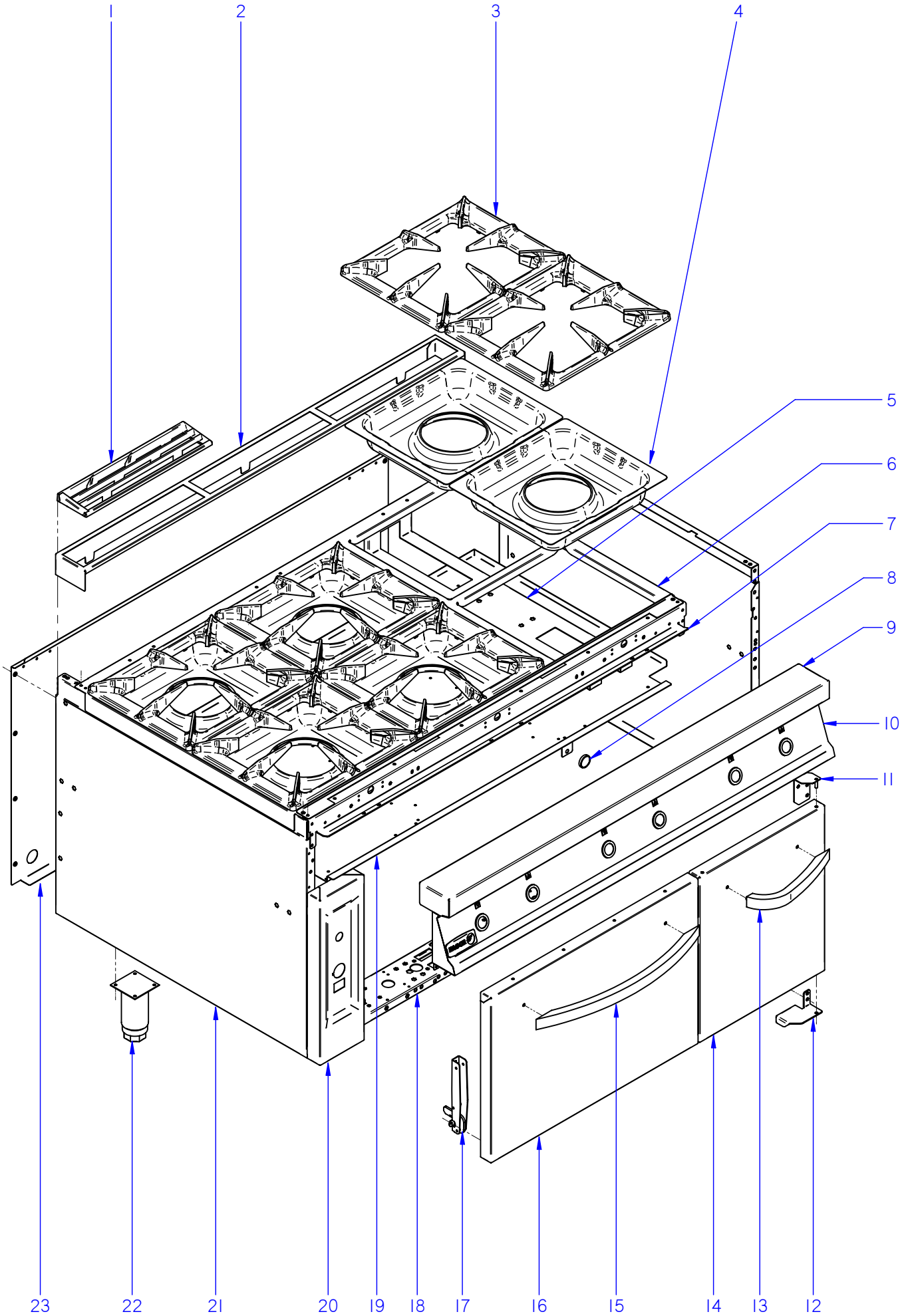


ITEM MARCADO EN COLOR = REPUESTO RECOMENDADO
COLOURED ITEM = RECOMMENDED SPARE PART

| N plano | Firma | Fecha | Aparato | MUEBLE | Lamina | |
|---|---|---|---|---|---|---|
| C-2341 | | 2009-06 | COCINA CG9-41 / 61 / 82 / CGE9-41 | | 2 | Fagor Industrial S.Coop. FAGOR Oñate |

| MOD. | COCINAS | ZONA | MUEBLE / UNIT | PLANO | C-2341 |
|---|---|---|---|---|---|

| ITEM | CODIGO | DENOMINACION | TEXTO | CG9-41 | CG9-61 | CG9-82 | CG9-61 OP | CGE9-41 | | | NOTAS |
|---|---|---|---|---|---|---|---|---|---|---|---|
| 1 | R205425000 | EMBELLECEDOR ESMALTE | ENAMEL TRIM | 2 | 3 | 4 | 3 | 2 | | | |
| 2 | R205439000 | SOPORTE EMBELLECEDOR 1 M | TRIM SUPPORT 1 M | 1 | _ | 2 | _ | 1 | | | |
| 2 | R205440000 | SOPORTE EMBELLECEDOR 1,5 M | TRIM SUPPORT 1.5 M | _ | 1 | _ | 1 | _ | | | |
| 3 | U035409000 | PARRILLA GAMA 900 | GRILL 900 RANGE | 4 | 6 | 8 | 6 | 4 | | | |
| 4 | U025473000 | BACINETA QUEMADOR G900 | BASIN BURNER G900 | 4 | 6 | 8 | 6 | 4 | | | |
| 5 | U022617000 | LISTON SOP. QUEMADOR G900 | BURNER SUPPORT STRIP | 2 | 3 | 4 | 3 | 2 | | | ELIMINADO 31.01.11 |
| 5 | U022651000 | LISTON SOP. QUEMADOR G900 | BURNER SUPPORT STRIP | 2 | 3 | 4 | 3 | 2 | | | INTRODUCIDO 31.01.11 |
| | Q221343000 | REMACHE EXAGONAL M6 | HEXAGONAL RIVET M6 | 8 | 12 | 16 | 12 | 8 | | | |
| | Q221342000 | REMACHE EXAGONAL M5 | HEXAGONAL RIVET M5 | 4 | 8 | 16 | 8 | 4 | | | |
| 6 | U025472000 | MESA 1 M G900 | BENCH 1 M G900 | 1 | _ | 2 | _ | 1 | | | |
| 6 | U025475000 | MESA 1,5 M G900 | BENCH 1.5 M G900 | _ | 1 | _ | 1 | _ | | | |
| | Q152004000 | TORNIL, APLASTADO M5x13 A304 | FLAT HEADED BOLT M5x13 A304 | 10 | 12 | 20 | 12 | 10 | | | |
| | Q221342000 | REMACHE EXAGONAL M5 | HEXAGONAL RIVET M5 | 4 | 6 | 8 | 6 | 4 | | | |
| 7 | U022632000 | ESCUA INTER AMAR ANTE 1 M | BRACKET INTER FASTE. FRONT | 1 | _ | 2 | _ | 1 | | | |
| 7 | U032625000 | ESCUA INTER AMAR ANTE 1,5 M | BRACKET INTER FASTE. FRONT | _ | 1 | _ | 1 | _ | | | |
| | Q221342000 | REMACHE EXAGONAL M5 | HEXAGONAL RIVET M5 | 4 | 6 | 8 | 6 | 4 | | | |
| | Q012032000 | TORNILLO EXAGONAL M5x15 | HEXAGONAL BOLT M5x15 | 4 | 6 | 8 | 6 | 4 | | | |
| | Q152004000 | TORNIL, APLASTADO M5x13 A304 | FLAT HEADED BOLT M5x13 A304 | 6 | 6 | 12 | 6 | 6 | | | |
| | Q302022000 | ARANDELA 16x6x1,2 A304 | WASHER 16x6x1.2 A304 | 6 | 6 | 12 | 6 | 6 | | | |
| 8 | X960501000 | IMAN | MAGNET | _ | 2 | _ | _ | _ | | | |
| S/Nº | X960502000 | FIJACION IMAN | MAGNET ATTACHMENT | _ | 2 | _ | _ | _ | | | |
| | Q012021000 | TORNILLO EXAGONAL M4X10 | HEXAGONAL BOLT M4x10 | _ | 2 | _ | _ | _ | | | |
| | Q232020000 | ARANDELA A4 | WASHER A4 | _ | 2 | _ | _ | _ | | | |
| 9 | S105402000 | ANTERIOR MESA 1 M | BENCH FRONT 1 M | 1 | _ | _ | _ | 1 | | | |
| 9 | U035406000 | ANTERIOR MESA 1,5 M | BENCH FRONT 1.5 M | _ | 1 | _ | 1 | _ | | | |
| 9 | U125401000 | ANTERIOR MESA 2 M | BENCH FRONT 2 M | _ | _ | 1 | _ | _ | | | |
| | Q152004000 | TORNIL, APLASTADO M5x13 A304 | FLAT HEADED BOLT M5x13 A304 | 2 | 3 | 4 | 3 | 2 | | | |
| | Q302022000 | ARANDELA 16x6x1,2 A304 | WASHER 16x6x1.2 A304 | 2 | 3 | 4 | 3 | 2 | | | |
| | | | | | | | | | | | |
| | | | | | | | | | | | |
| | | | | | | | | | | | |

| MOD. | COCINAS | ZONA | MUEBLE / UNIT | PLANO | C-2341 |
|---|---|---|---|---|---|

| ITEM | CODIGO | DENOMINACION | TEXTO | CG9-41 | CG9-61 | CG9-82 | CG9-61 OP | CGE9-41 | | | NOTAS |
|---|---|---|---|---|---|---|---|---|---|---|---|
| 10 | U022852000 | PORTAMANDOS COMPL. CG9-41 | CONTROL HOLDER CG9-41 | 1 | _ | _ | _ | 1 | | | |
| 10 | U032811000 | PORTAMANDOS COMPL. CG9-61 | CONTROL HOLDER CG9-61 | _ | 1 | _ | _ | _ | | | |
| 10 | U122831000 | PORTAMANDOS COMPL. CG9-82 | CONTROL HOLDER CG9-82 | _ | _ | 1 | _ | _ | | | |
| 10 | U102814000 | PORTAMANDOS COMP. CG9-61OP | CONTROL HOLDER CG9-61OP | _ | _ | _ | 1 | _ | | | |
| | U022836000 | ESCUDO FAGOR | FAGOR EMBLEM | 1 | 1 | 1 | 1 | 1 | | | |
| | Q221023000 | CLIP SUJECIÓN RÁPIDA Ø5 | RAPID CONNECT CLIP Ø5 | 2 | 2 | 2 | 2 | 2 | | | |
| 11 | U032619000 | BISAGRA SUPERIOR DERECHA | UPPER RIGHT HINGE | _ | 1 | _ | _ | _ | | | |
| | Q221342000 | REMACHE EXAGONAL M5 | HEXAGONAL RIVET M5 | _ | 2 | _ | _ | _ | | | |
| 12 | U020511000 | BISAGRA DERECHA INFERIOR | LOWER RIGHT HINGE | _ | 1 | _ | _ | _ | | | |
| | Q232040000 | ARANDELA A6 | WASHER A6 | _ | 1 | _ | _ | _ | | | |
| | X960504000 | TORNILLO DE GIRO M8 | ROTATION BOLT M8 | _ | 1 | _ | _ | _ | | | |
| | Q012042000 | TORNILLO EXAGONAL M6x15 A304 | HEXAGONAL BOLT M6x15 A304 | _ | 2 | _ | _ | _ | | | |
| | Q302022000 | ARANDELA 16x6x1,2 A304 | WASHER 16x6x1.2 A304 | _ | 2 | _ | _ | _ | | | |
| 13 | U020507000 | ASA ARMARIO COMPLETO G900 | FULL CUPBOARD HANDLE G900 | _ | 1 | _ | _ | _ | | | |
| | Q162040000 | TUERCA EXAGONAL M6 | HEXAGONAL NUT M6 | _ | 2 | _ | _ | _ | | | |
| | Q302022000 | ARANDELA 16x6x1,2 A304 | WASHER 16x6x1.2 A304 | _ | 2 | _ | _ | _ | | | |
| 14 | U020536000 | PUERTA LATERAL G900 | SIDE DOOR G900 | _ | 1 | _ | _ | _ | | | |
| | Q419005000 | REMACHE 4x8 ALMG3 / ALUMINIO | RIVET 4X8 ALMG3 / ALUMINIUM | _ | 4 | _ | _ | _ | | | |
| 15 | U020504000 | ASA DE HORNO COMPLETA G900 | COMPL. OVEN HANDLE G900 | 1 | 1 | 2 | 1 | 1 | | | |
| | Q012041000 | TORNILLO EXAGONAL M6x10 | HEXAGONAL BOLT M6x10 | 2 | 2 | 4 | 2 | 2 | | | |
| | Q302022000 | ARANDELA 16x6x1,2 A304 | WASHER 16x6x1.2 A304 | 2 | 2 | 4 | 2 | 2 | | | |
| | **12038310** | **KIT PUERTA HORNO** | **OVEN DOOR KIT** | **1** | **1** | **2** | _ | **1** | | | |
| 16 | U910501000 | PUERTA DE HORNO | OVEN DOOR | 1 | 1 | 2 | _ | 1 | | | |
| 16 | U100514000 | PUERTA DE HORNO GRANDE | OVEN DOOR | _ | _ | _ | 1 | _ | | | ELIMINADO 20.06.11 |
| 16 | U100522000 | PUERTA DE HORNO OP | OVEN DOOR OP | _ | _ | _ | 1 | _ | | | INTRODUCIDO 20.06.11 |
| 17 | U020528000 | BISAGRA CIERRE HORNO | OVEN LOCK HINGE | 2 | 2 | 4 | 2 | 2 | | | |
| | Q152022000 | TORNILLO M6x8 | BOLT M6x8 | 6 | 6 | 12 | 6 | 6 | | | |
| 18 | U022625000 | LISTON SOPORTE PATAS 1 M | LEG SUPPORT STRIP 1 M | 2 | _ | _ | _ | 2 | | | |
| 18 | U032615000 | LISTON SOPORTE PATAS 1,5 M | LEG SUPPORT STRIP 1.5 M | _ | 2 | _ | _ | _ | | | |
| 18 | U122606000 | LISTON SOPORTE PATAS 2 M | LEG SUPPORT STRIP 2 M | _ | _ | 2 | _ | _ | | | |
| 18 | U102611000 | LISTON SOPORTE PATAS 1,5 M OP | LEG SUPPORT STRIP 1.5 M | _ | _ | _ | 2 | _ | | | |

| MOD. | COCINAS | ZONA | MUEBLE / UNIT | PLANO | C-2341 |
|---|---|---|---|---|---|

| ITEM | CODIGO | DENOMINACION | TEXTO | CG9-41 | CG9-61 | CG9-82 | CG9-61 OP | CGE9-41 | | | NOTAS |
|---|---|---|---|---|---|---|---|---|---|---|---|
| 19 | U022613000 | BASE BANDEJAS 1 M | TRAY BASE 1 M | 1 | _ | 2 | _ | 1 | | | |
| 19 | U022626000 | BASE BANDEJAS 1,5 M | TRAY BASE 1.5 M | _ | 1 | _ | _ | _ | | | |
| 19 | U102615000 | BASE BANDEJAS 1,5 M OP | TRAY BASE 1.5 M OP | _ | _ | _ | 1 | _ | | | |
| | Q419005000 | REMACHE 4x8 ALMG3 / ALUMINIO | RIVET 4X8 ALMG3 / ALUMINIUM | 2 | 2 | 4 | 2 | 2 | | | |
| | Q152004000 | TORNIL, APLASTADO M5x13 A304 | FLAT HEADED BOLT M5x13 A304 | 3 | 3 | 6 | 3 | 3 | | | |
| 20 | U022843000 | PORTAMANDOS LATERAL HORNO | OVEN SIDE CONTROL HOLDER | 1 | 1 | 2 | 1 | _ | | | ELIMINADO 03.10.11 |
| 20 | U962829000 | PORTAMAND. LATERAL HORNO AD | OVEN SIDE CONTROL HOLD. AD | 1 | 1 | 2 | 1 | _ | | | INTRODUCIDO 03.10.11 |
| 20 | U672855000 | PORTAMANDOS LATERAL HORNO | OVEN SIDE CONTROL HOLDER | _ | _ | _ | _ | 1 | | | ELIMINADO 14.10.11 |
| 20 | 12041036 | PORTAM. LATERAL HORNO ELECT. | OVEN SIDE CONTROL HOLDER | _ | _ | _ | _ | 1 | | | INTRODUCIDO 14.10.11 |
| | Q152004000 | TORNIL, APLASTADO M5x13 A304 | FLAT HEADED BOLT M5x13 A304 | 2 | 2 | 4 | 2 | 2 | | | |
| 21 | X162813000 | PANEL LATERAL IZQUIERDO G900 | LEFT SIDE PANEL G900 | 1 | 1 | 2 | 1 | 1 | | | |
| S/Nº | U022842000 | PANEL LATERAL DERECHO G9-00 | RIGHT SIDE PANEL G9-00 | 1 | _ | 2 | _ | 1 | | | |
| S/Nº | X162814000 | PANEL LATERAL DERECHO G9-00 | RIGHT SIDE PANEL G9-00 | _ | 1 | _ | _ | _ | | | |
| S/Nº | U022819000 | PANEL LATERAL DERECHO G9-00 | RIGHT SIDE PANEL G9-00 | _ | _ | _ | 1 | _ | | | |
| | Q221343000 | REMACHE EXAGONAL M6 | HEXAGONAL RIVET M6 | 22 | 22 | 30 | 22 | 22 | | | |
| | Q221342000 | REMACHE EXAGONAL M5 | HEXAGONAL RIVET M5 | 22 | 22 | 44 | 22 | 22 | | | |
| | Q012043000 | TORNILLO EXAGONAL M6x20 A304 | HEXAGONAL BOLT M6x20 A304 | 4 | 4 | 4 | 4 | 4 | | | |
| | Q152004000 | TORNILLO APLASTADO M5x13 A304 | FLAT HEADED BOLT M5x13 A304 | 6 | 6 | 6 | 6 | 6 | | | |
| 22 | X260151000 | PATA REGULABLE | ADJUSTABLE LEG | 4 | 4 | 4 | 4 | 4 | | | |
| | Q411304000 | REMACHE AVIBULB Ø 4,8 | AVIBULB RIVET Ø 4.8 | 16 | 16 | 16 | 16 | 16 | | | |
| 23 | U562853000 | PANEL POSTERIOR 1 M | REAR PANEL 1 M | 1 | _ | _ | _ | 1 | | | |
| 23 | U582852000 | PANEL POSTERIOR 1,5 M | REAR PANEL 1.5 M | _ | 1 | _ | 1 | _ | | | |
| 23 | U592852000 | PANEL POSTERIOR 2 M | REAR PANEL 2 M | 1 | _ | 1 | _ | 1 | | | |
| | Q419005000 | REMACHE 4x8 ALMG3 / ALUMINIO | RIVET 4X8 ALMG3 / ALUMINIUM | 8 | 11 | 16 | 11 | 8 | | | |
| | | | | | | | | | | | |
| | | | | | | | | | | | |
| | | | | | | | | | | | |
| | | | | | | | | | | | |
| | | | | | | | | | | | |
| | | | | | | | | | | | |
| | | | | | | | | | | | |

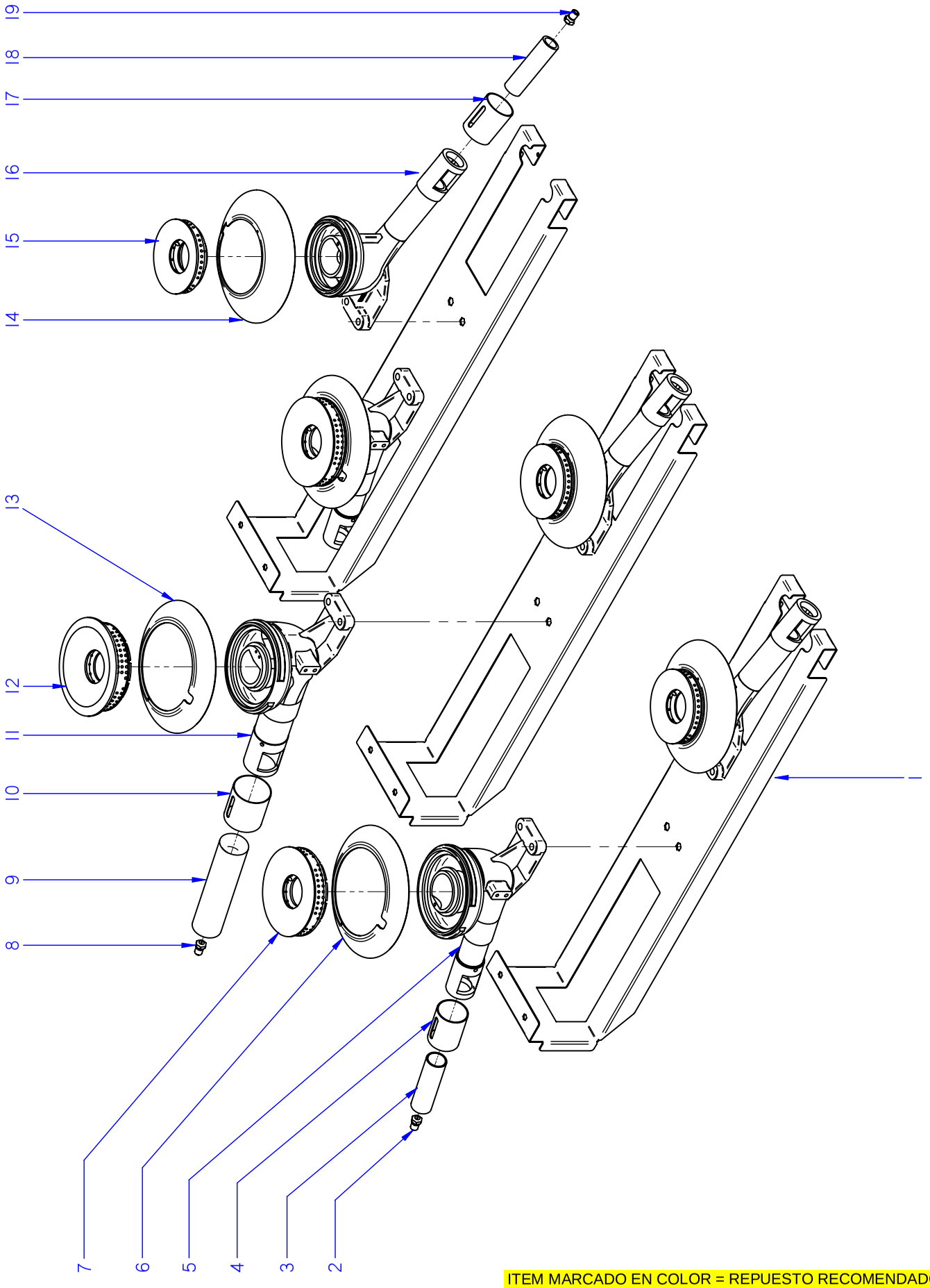


ITEM MARCADO EN COLOR = REPUESTO RECOMENDADO
COLOURED ITEM = RECOMMENDED SPARE PART

| N plano | Firma | Fecha | Aparato | | Lamina | |
|---|---|---|---|---|---|---|
| C-2342 | | 2009-06 | QUEMADORES<br>COCINA CG9-20 / 40 / 60 / CGE9-41 | | 3 | Fagor Industrial S.Coop. FAGOR<br>Onate |

| MOD. | COCINAS | ZONA | QUEMADORES / BURNERS | PLANO | C-2342 |
|---|---|---|---|---|---|

| ITEM | CODIGO | DENOMINACION | TEXTO | CG9-20 | CG9-40 | CG9-60 | CGE9-41 | | | | NOTAS |
|---|---|---|---|---|---|---|---|---|---|---|---|
| 1 | U022617000 | LISTON SOP. QUEMADOR G900 | BURNER SUPPORT STRIP | 1 | 2 | 3 | 2 | | | | ELIMINADO 31.01.11 |
| 1 | U022651000 | LISTON SOP. QUEMADOR G900 | BURNER SUPPORT STRIP | 1 | 2 | 3 | 2 | | | | INTRODUCIDO 31.01.11 |
| | Q221343000 | REMACHE EXAGONAL M6 | HEXAGONAL RIVET M6 | 4 | 8 | 12 | 8 | | | | |
| | Q221342000 | REMACHE EXAGONAL M5 | HEXAGONAL RIVET M5 | 4 | 6 | 8 | 4 | | | | |
| 2 | 631000000 | TOBERA Ø 1,40 BP (8000) | NOZZLE Ø 1.40 BP (8000) | 1 | 1 | 2 | 1 | | | | |
| 2 | U112402000 | TOBERA Ø 2,10 GN (8000) | NOZZLE Ø 2,10 GN (8000) | 1 | 1 | 2 | 1 | | | | |
| 3 | U565700000 | VENTURI QUEMADOR 8000 | VENTURI BURNER 8000 | 1 | 1 | 2 | 1 | | | | |
| 4 | U265702000 | REGULADOR AIRE | AIR CONTROLLER | 1 | 1 | 2 | 1 | | | | |
| | Q132054000 | VARILLA ROSCADA M6 x 12 | THREADED ROD M6 x 12 | 1 | 1 | 2 | 1 | | | | |
| | Q162004000 | TUERCA EXAGONAL M6 | HEXAGONAL NUT M6 | 1 | 1 | 2 | 1 | | | | |
| 5 | U025710000 | CUERPO QUEMADOR 8000 Kcal/H | BURNER BODY 8000 Kcal/h | 1 | 1 | 2 | 1 | | | | |
| | Q372004000 | PASADOR ELASTICO 5x20 | ELASTIC PIN 5x20 | 1 | 2 | 2 | 2 | | | | |
| 6 | U915703000 | PROTEC. PILOTO QUEMAD. 7000 | BURNER PILOT GUARD 7000 | 1 | 1 | 2 | 1 | | | | |
| | 12093788 | ESPARRAGO ALLEN M3x12 | ALLEN M3x12 ROD | 1 | 1 | 2 | 1 | | | | |
| 7 | U135702500 | QUEMADOR 8000 | BURNER 8000 | 1 | 1 | 2 | 1 | | | | |
| | Q371026000 | MANGUITO DE SUJECION Ø 4x14 | HANDLE Ø 4x14 | 1 | 1 | 2 | 1 | | | | |
| | Q012045000 | TORNILLO EXAGONAL M6x30 A304 | HEXAGONAL BOLT M6x30 A304 | 1 | 1 | 2 | 1 | | | | |
| | Q302022000 | ARANDELA 16x6x1,2 A304 | WASHER 16x6x1.2 A304 | 1 | 1 | 2 | 1 | | | | |
| | U565011000 | TUERCA GUIA | GUIDE NUT | 1 | 1 | 2 | 1 | | | | |
| 8 | U112401000 | TOBERA Ø 1,55 BP (10500) | NOZZLE Ø 1.55 BP (10500) | _ | 1 | 1 | 1 | | | | |
| 8 | 631600000 | TOBERA Ø 2,40 GN (10500) | NOZZLE Ø 2.40 GN (10500) | _ | 1 | 1 | 1 | | | | |
| 9 | U235706000 | VENTURI 10.500 | VENTURI 10,500 | _ | 1 | 1 | 1 | | | | ELIMINADO 01.12.09 |
| 9 | U235707000 | VENTURI 10.500 | VENTURI 10,500 | _ | 1 | 1 | 1 | | | | INTRODUCIDO 01.12.09 |
| 10 | U025706000 | REGULADOR DE AIRE 10.000 | AIR CONTROL 10.000 | _ | 1 | 1 | 1 | | | | |
| | Q132054000 | VARILLA ROSCADA M6x12 | THREADED ROD M6X12 | _ | 1 | 1 | 1 | | | | |
| | Q162004000 | TUERCA EXAGONAL M6 | HEXAGONAL NUT M6 | _ | 1 | 1 | 1 | | | | |
| 11 | U025711000 | CUERPO QUEMADOR 10.000Kcal/H | BURNER BODY 10,000 Kcal/H | _ | 1 | 1 | 1 | | | | |
| | Q372004000 | PASADOR ELASTICO 5x20 | ELASTIC PIN 5x20 | _ | 1 | 1 | 1 | | | | |
| | Q371028000 | MANGUITO DE SUJECION Ø 3x14 | HANDLE Ø 3x14 | _ | 2 | 2 | 2 | | | | |
| 12 | U235701500 | DIFUSOR 10.500 Kcal/H | DIFFUSER 10.500 Kcal/H | _ | 1 | 1 | 1 | | | | ELIMINADO 22.10.12 |
| 12 | 12047137 | DIFUSOR 10.500 (AGUJ Y PINTA) | DIFFUSER 10.500 | _ | 1 | 1 | 1 | | | | INTRODUCIDO 22.10.12 |

| MOD. | COCINAS | ZONA | QUEMADORES / BURNERS | PLANO | C-2342 |
|---|---|---|---|---|---|

| ITEM | CODIGO | DENOMINACION | TEXTO | CG9-20 | CG9-40 | CG9-60 | CGE9-41 | | | | NOTAS |
|---|---|---|---|---|---|---|---|---|---|---|---|
| 13 | U915703000 | PROTEC. PILOTO QUEMAD. 7000 | BURNER PILOT GUARD 7000 | _ | 1 | 1 | 1 | | | | |
| | 12093788 | ESPARRAGO ALLEN M3x12 | ALLEN M3x12 ROD | _ | 1 | 1 | 1 | | | | |
| 14 | U025712000 | PROTEC. PILOTO QUEMAD. 4000 | BURNER PILOT GUARD 4000 | 1 | 2 | 3 | 2 | | | | |
| | 12093788 | ESPARRAGO ALLEN M3x12 | ALLEN M3x12 ROD | 1 | 2 | 3 | 2 | | | | |
| 15 | U445731500 | QUEMADOR 4000 (00545-010) | BURNER 4000 (00545-010) | 1 | 2 | 3 | 2 | | | | ELIMINADO 25.09.09 |
| 15 | U445731000 | QUEMADOR 4000 (00545-010) | BURNER 4000 (00545-010) | 1 | 2 | 3 | 2 | | | | ELIMINADO 27.08.12 |
| 15 | 12039162 | QUEMADOR 4000 4000 Kcal/H | BURNER 40004000 Kcal/H | 1 | 2 | 3 | 2 | | | | INTRODUCIDO 27.08.12 |
| | Q012045000 | TORNILLO EXAGONAL M6x30 A304 | HEXAGONAL BOLT M6x30 A304 | 1 | 2 | 3 | 2 | | | | |
| | Q302022000 | ARANDELA 16x6x1,2 A304 | WASHER 16x6x1.2 A304 | 1 | 2 | 3 | 2 | | | | |
| 16 | U025709000 | CUERPO QUEMADOR 4000Kcal/H | BURNER BODY 4000 Kcal/H | 1 | 2 | 3 | 2 | | | | |
| | Q371026000 | MANGUITO DE SUJECION Ø 4x14 | HANDLE Ø 4x14 | 1 | 2 | 3 | 2 | | | | |
| | Q372004000 | PASADOR ELASTICO 5x20 | ELASTIC PIN 5x20 | 1 | 2 | 2 | 2 | | | | |
| 17 | U265702000 | REGULADOR AIRE | AIR CONTROLLER | 1 | 2 | 3 | 2 | | | | |
| | Q132042000 | VARILLA ROSCADA M6 x 15 | THREADED ROD M6 x 15 | 1 | 2 | 3 | 2 | | | | ELIMINADO 02.11.09 |
| | Q131542000 | VARILLA ROSCADA M6 x 15 | THREADED ROD M6 x 15 | 1 | 2 | 3 | 2 | | | | INTRODUCIDO 02.11.09 |
| | Q162004000 | TUERCA EXAGONAL M6 | HEXAGONAL NUT M6 | 1 | 2 | 3 | 2 | | | | |
| 18 | U125720000 | VENTURI QUEMADOR 4000 kcl | VENTURI BURNER 4000 kcl | 1 | 2 | 3 | 2 | | | | |
| 19 | X312400000 | TOBERA Ø 1,10 BP (4000) | NOZZLE Ø 1.10 BP (4000) | 1 | 2 | 3 | 2 | | | | ELIMINADO 24.09.09 |
| 19 | U122407000 | TOBERA Ø 1,05 BP (4000) | NOZZLE Ø 1.05 BP (4000) | 1 | 2 | 3 | 2 | | | | INTRODUCIDO 24.09.09 |
| 19 | R302400000 | TOBERA Ø 1,65 GN (4000) | NOZZLE Ø 1.65 GN (4000) | 1 | 2 | 3 | 2 | | | | |
| | | | | | | | | | | | |
| | | | | | | | | | | | |
| | | | | | | | | | | | |
| | | | | | | | | | | | |
| | | | | | | | | | | | |
| | | | | | | | | | | | |
| | | | | | | | | | | | |
| | | | | | | | | | | | |
| | | | | | | | | | | | |
| | | | | | | | | | | | |
| | | | | | | | | | | | |

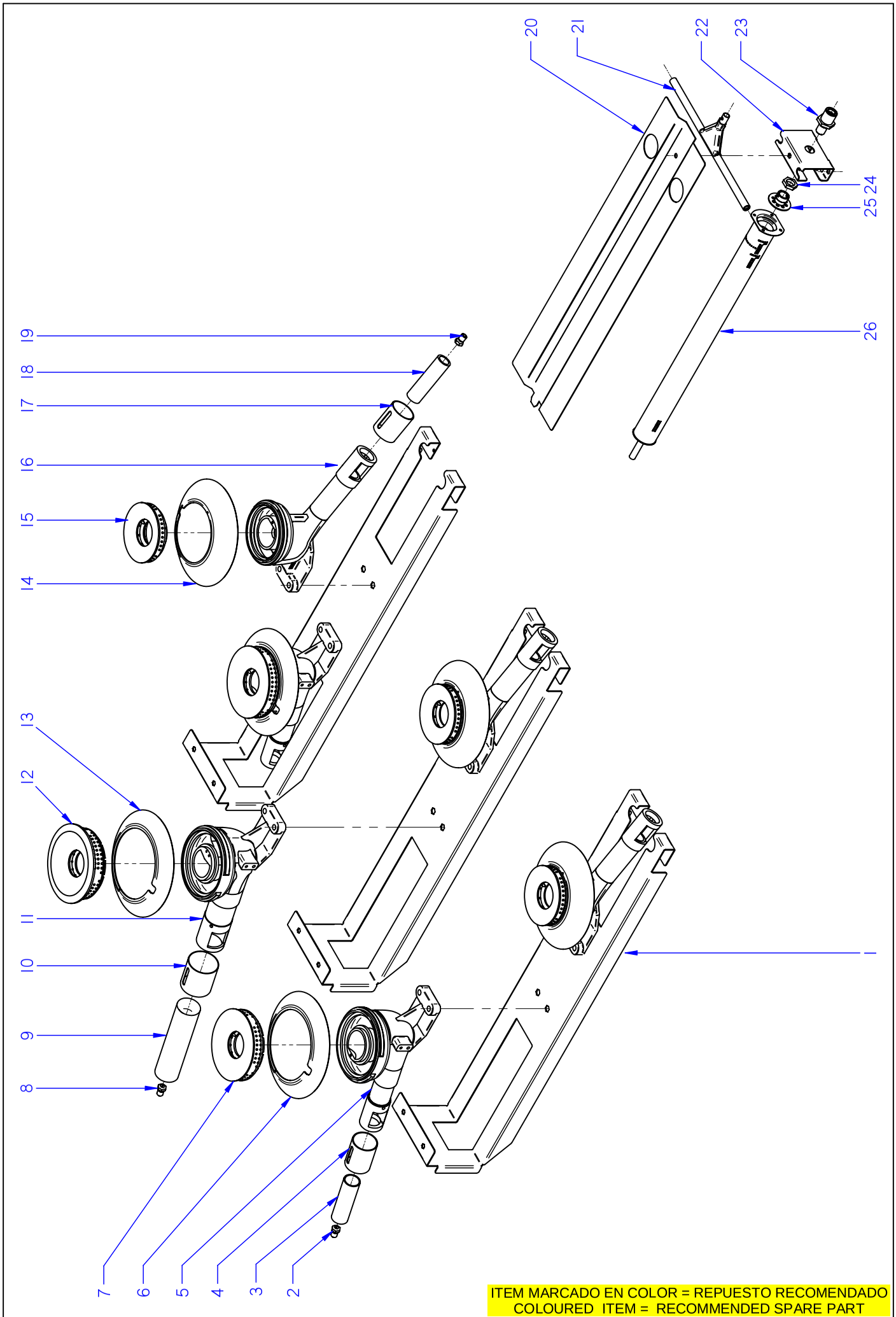


ITEM MARCADO EN COLOR = REPUESTO RECOMENDADO
COLOURED ITEM = RECOMMENDED SPARE PART

| N plano | Firma | Fecha | Aparato | | Lamina | |
|---|---|---|---|---|---|---|
| C-2343 | | 2009-06 | QUEMADORES<br>COCINA CG9-41 / 61 / 82 / 61 OP | | 4 | Fagor Industrial S.Coop. FAGOR<br>Onate |

| MOD. | COCINAS | ZONA | QUEMADORES / BURNERS | PLANO | C-2343 |
|---|---|---|---|---|---|

| ITEM | CODIGO | DENOMINACION | TEXTO | CG9-41 | CG9-61 | CG9-82 | CG9-61 OP | | | | NOTAS |
|---|---|---|---|---|---|---|---|---|---|---|---|
| 1 | U022617000 | LISTON SOP. QUEMADOR G900 | BURNER SUPPORT STRIP | 1 | 2 | 3 | 2 | | | | ELIMINADO 31.01.11 |
| 1 | U022651000 | LISTON SOP. QUEMADOR G900 | BURNER SUPPORT STRIP | 1 | 2 | 3 | 2 | | | | INTRODUCIDO 31.01.11 |
| 2 | 0631000000 | TOBERA Ø 1,40 BP (8000) | NOZZLE Ø 1.40 BP (8000) | 1 | 2 | 2 | 2 | | | | |
| 2 | U112402000 | TOBERA Ø 2,10 GN (8000) | NOZZLE Ø 2,10 GN (8000) | 1 | 2 | 2 | 2 | | | | |
| 3 | U565700000 | VENTURI QUEMADOR 8000 | VENTURI BURNER 8000 | 1 | 2 | 2 | 2 | | | | |
| 4 | U265702000 | REGULADOR AIRE | AIR CONTROLLER | 1 | 2 | 2 | 2 | | | | |
| | Q132054000 | VARILLA ROSCADA M6 x 12 | THREADED ROD M6 x 12 | 1 | 2 | 2 | 2 | | | | |
| | Q162004000 | TUERCA EXAGONAL M6 | HEXAGONAL NUT M6 | 1 | 2 | 2 | 2 | | | | |
| 5 | U025710000 | CUERPO QUEMADOR 8000 Kcal/H | BURNER BODY 8000 Kcal/h | 1 | 2 | 2 | 2 | | | | |
| | Q372004000 | PASADOR ELASTICO 5x20 | ELASTIC PIN 5x20 | 1 | 2 | 2 | 2 | | | | |
| 6 | U915703000 | PROTEC. PILOTO QUEMAD. 7000 | BURNER PILOT GUARD 7000 | 1 | 2 | 2 | 2 | | | | |
| | 12093788 | ESPARRAGO ALLEN M3x12 | ALLEN M3x12 ROD | 1 | 2 | 2 | 2 | | | | |
| 7 | U135702500 | QUEMADOR 8000 | BURNER 8000 | 1 | 2 | 2 | 2 | | | | |
| | Q371026000 | MANGUITO DE SUJECION Ø 4x14 | HANDLE Ø 4x14 | 1 | 2 | 2 | 2 | | | | |
| | Q012045000 | TORNILLO EXAGONAL M6x30 A304 | HEXAGONAL BOLT M6x30 A304 | 1 | 4 | 2 | 4 | | | | |
| | U565011000 | TUERCA GUIA | GUIDE NUT | 1 | 2 | 2 | 2 | | | | |
| 8 | U112401000 | TOBERA Ø 1,55 BP (10500) | NOZZLE Ø 1.55 BP (10500) | 1 | 1 | 2 | 1 | | | | |
| 8 | 631600000 | TOBERA Ø 2,40 GN (10500) | NOZZLE Ø 2.40 GN (10500) | 1 | 1 | 2 | 1 | | | | |
| 9 | U235706000 | VENTURI 10.500 | VENTURI 10,500 | 1 | 1 | 2 | 1 | | | | ELIMINADO 01.12.09 |
| 9 | U235707000 | VENTURI 10.500 | VENTURI 10,500 | 1 | 1 | 2 | 1 | | | | INTRODUCIDO 01.12.09 |
| 10 | U025706000 | REGULADOR DE AIRE 10.000 | AIR CONTROL 10.000 | 1 | 1 | 2 | 1 | | | | |
| | Q132054000 | VARILLA ROSCADA M6x12 | THREADED ROD M6X12 | 1 | 1 | 2 | 1 | | | | |
| | Q162004000 | TUERCA EXAGONAL M6 | HEXAGONAL NUT M6 | 1 | 1 | 2 | 1 | | | | |
| 11 | U025711000 | CUERPO QUEMADOR 10.000Kcal/H | BURNER BODY 10,000 Kcal/H | 1 | 1 | 2 | 1 | | | | |
| | Q371028000 | MANGUITO DE SUJECION Ø 3x14 | HANDLE Ø 3x14 | 1 | 1 | 2 | 1 | | | | |
| | Q372004000 | PASADOR ELASTICO 5x20 | ELASTIC PIN 5x20 | 1 | 1 | 2 | 1 | | | | |
| 12 | U235701500 | DIFUSOR 10.500 Kcal/H | DIFFUSER 10.500 Kcal/H | 1 | 1 | 2 | 1 | | | | ELIMINADO 22.10.12 |
| 12 | 12047137 | DIFUSOR 10.500 (AGUJ Y PINTA) | DIFFUSER 10.500 | 1 | 1 | 2 | 1 | | | | INTRODUCIDO 22.10.12 |
| | Q012045000 | TORNILLO EXAGONAL M6x30 A304 | HEXAGONAL BOLT M6x30 A304 | 1 | 1 | 2 | 1 | | | | |
| 13 | U915703000 | PROTEC. PILOTO QUEMAD. 7000 | BURNER PILOT GUARD 7000 | 1 | 1 | 2 | 1 | | | | |
| | 12093788 | ESPARRAGO ALLEN M3x12 | ALLEN M3x12 ROD | 1 | 1 | 2 | 1 | | | | |

| MOD. | COCINAS | ZONA | QUEMADORES / BURNERS | PLANO | C-2343 |
|---|---|---|---|---|---|

| ITEM | CODIGO | DENOMINACION | TEXTO | CG9-41 | CG9-61 | CG9-82 | CG9-61 OP | | | | NOTAS |
|---|---|---|---|---|---|---|---|---|---|---|---|
| 14 | U025712000 | PROTEC. PILOTO QUEMAD. 4000 | BURNER PILOT GUARD 4000 | 2 | 3 | 4 | 3 | | | | |
| | 12093788 | ESPARRAGO ALLEN M3x12 | ALLEN M3x12 ROD | 2 | 3 | 4 | 3 | | | | |
| 15 | U445731500 | QUEMADOR 4000 (00545-010) | BURNER 4000 (00545-010) | 2 | 3 | 4 | 3 | | | | ELIMINADO 25.09.09 |
| 15 | U445731000 | QUEMADOR 4000 (00545-010) | BURNER 4000 (00545-010) | 1 | 2 | 3 | 2 | | | | ELIMINADO 27.08.12 |
| 15 | 12039162 | QUEMADOR 4000 4000 Kcal/H | BURNER 40004000 Kcal/H | 1 | 2 | 3 | 2 | | | | INTRODUCIDO 27.08.12 |
| 16 | U025709000 | CUERPO QUEMADOR 4000Kcal/H | BURNER BODY 4000 Kcal/H | 2 | 3 | 4 | 3 | | | | |
| | Q371026000 | MANGUITO DE SUJECION Ø 4x14 | HANDLE Ø 4x14 | 2 | 3 | 4 | 3 | | | | |
| | Q372004000 | PASADOR ELASTICO 5x20 | ELASTIC PIN 5x20 | 2 | 3 | 4 | 3 | | | | |
| 17 | U265702000 | REGULADOR AIRE | AIR CONTROLLER | 2 | 3 | 4 | 3 | | | | |
| | Q132042000 | VARILLA ROSCADA M6 x 15 | THREADED ROD M6 x 15 | 2 | 3 | 4 | 3 | | | | |
| | Q162004000 | TUERCA EXAGONAL M6 | HEXAGONAL NUT M6 | 2 | 3 | 4 | 3 | | | | |
| 18 | U125720000 | VENTURI QUEMADOR 4000 kcl | VENTURI BURNER 4000 kcl | 2 | 3 | 4 | 3 | | | | |
| 19 | X312400000 | TOBERA Ø 1,10 BP (4000) | NOZZLE Ø 1.10 BP (4000) | 2 | 3 | 4 | 3 | | | | ELIMINADO 24.09.09 |
| 19 | U122407000 | TOBERA Ø 1,05 BP (4000) | NOZZLE Ø 1.05 BP (4000) | 2 | 3 | 4 | 3 | | | | INTRODUCIDO 24.09.09 |
| 19 | R302400000 | TOBERA Ø 1,65 GN (4000) | NOZZLE Ø 1.65 GN (4000) | 2 | 3 | 4 | 3 | | | | |
| 20 | U915613000 | DEFLECTOR QUEMADOR HORNO | OVEN BURNER DEFLECTOR | 2 | 2 | 4 | _ | | | | |
| 20 | U105610000 | DEFLECTOR QUEMADOR HORNO | OVEN BURNER DEFLECTOR | _ | _ | _ | 2 | | | | |
| 21 | U105712000 | RAMA ENCENDIDO QUEM. HORNO | OVEN BURNER IGNITION BRANC | _ | _ | _ | 1 | | | | |
| | X205028000 | BICONO Ø 6 | BICONEØ 6 | _ | _ | _ | 1 | | | | |
| | U105013000 | TUERCA M10x1(024 0003.00)POL | NUT M10x1(024 0003.00)POL | _ | _ | _ | 1 | | | | |
| 22 | U105635000 | AMARRE QUEMADOR HORNO(HG) | OVEN BURNER FASTENING (HG) | 1 | 1 | 2 | 2 | | | | |
| | Q012031000 | TORNILLO EXAGONAL M5x10 A304 | HEXAGONAL BOLT M5x10 A304 | 2 | 2 | 4 | 4 | | | | |
| 23 | X505724000 | MANGUITO PORTATOBERAS | NOZZLE HOLDER SLEEVE | 1 | 1 | 2 | 2 | | | | |
| 24 | Q223019000 | TUERCA 3/8 GAS LATÓN | NUT 3/8 GAS BRASS | 1 | 1 | 2 | 2 | | | | |
| 25 | X505013000 | REGULADOR DE AIRE POLIDORO | POLIDORO AIR CONTROL | 1 | 1 | 2 | 2 | | | | |
| 26 | U105701000 | QUEMADOR HORNO | OVEN BURNER. | 1 | 1 | 2 | 2 | | | | |
| | Q042022000 | TORNILLO AVELLLANADO M4X15 | COUNTERSUNK BOLT M4x15 | 4 | 4 | 8 | 8 | | | | |
| S/Nº | U052401000 | TOBERA Ø 1,45 BP | NOZZLE Ø 1.45 BP | 1 | 1 | 2 | _ | | | | |
| S/Nº | 631000000 | TOBERA Ø 1,40 BP | NOZZLE Ø 1.40 BP | _ | _ | _ | 1 | | | | |
| S/Nº | U262400000 | TOBERA Ø 2,15 GN | NOZZLE Ø 2.15 GN | 1 | 1 | 2 | _ | | | | |
| S/Nº | U262400000 | TOBERA Ø 2,15 GN | NOZZLE Ø 2.15 GN | _ | _ | _ | 1 | | | | |

| MOD. | COCINAS | ZONA | QUEMADORES / BURNERS | PLANO | C-2342<br>C-2343 |
|---|---|---|---|---|---|

| ITEM | CODIGO | DENOMINACION | TEXTO | CG9-20 H | CG9-40 H | CG9-60 H | CG9-41 H | CG9-61 H | | | NOTAS |
|---|---|---|---|---|---|---|---|---|---|---|---|
| 1 | U022617000 | LISTON SOP. QUEMADOR G900 | BURNER SUPPORT STRIP | 1 | 2 | 3 | 2 | 3 | | | ELIMINADO 31.01.11 |
| 1 | U022651000 | LISTON SOP. QUEMADOR G900 | BURNER SUPPORT STRIP | 1 | 2 | 3 | 2 | 3 | | | INTRODUCIDO 31.01.11 |
| 2 | 631000000 | TOBERA Ø 1,40 BP (8000) | NOZZLE Ø 1.40 BP (8000) | 1 | 3 | 5 | 3 | 5 | | | |
| 2 | U112402000 | TOBERA Ø 2,10 GN (8000) | NOZZLE Ø 2,10 GN (8000) | 1 | 3 | 5 | 3 | 5 | | | |
| 3 | U565700000 | VENTURI QUEMADOR 8000 | VENTURI BURNER 8000 | 1 | 3 | 5 | 3 | 5 | | | |
| 4 | U265702000 | REGULADOR AIRE | AIR CONTROLLER | 1 | 3 | 5 | 3 | 5 | | | |
| | Q132054000 | VARILLA ROSCADA M6 x 12 | THREADED ROD M6 x 12 | 1 | 3 | 5 | 3 | 5 | | | |
| | Q162004000 | TUERCA EXAGONAL M6 | HEXAGONAL NUT M6 | 1 | 3 | 5 | 3 | 5 | | | |
| 5 | U025710000 | CUERPO QUEMADOR 8000 Kcal/H | BURNER BODY 8000 Kcal/h | 1 | 3 | 5 | 3 | 5 | | | |
| | Q372004000 | PASADOR ELASTICO 5x20 | ELASTIC PIN 5x20 | 1 | 3 | 5 | 3 | 5 | | | |
| 6 | U915703000 | PROTEC. PILOTO QUEMAD. 7000 | BURNER PILOT GUARD 7000 | 1 | 3 | 5 | 3 | 5 | | | |
| | 12093788 | ESPARRAGO ALLEN M3x12 | ALLEN M3x12 ROD | 1 | 3 | 5 | 3 | 5 | | | |
| 7 | U135702500 | QUEMADOR 8000 | BURNER 8000 | 1 | 3 | 5 | 3 | 5 | | | |
| | Q371026000 | MANGUITO DE SUJECION Ø 4x14 | HANDLE Ø 4x14 | 1 | 3 | 5 | 3 | 5 | | | |
| | Q012045000 | TORNILLO EXAGONAL M6x30 A304 | HEXAGONAL BOLT M6x30 A304 | 1 | 3 | 5 | 3 | 5 | | | |
| | U565011000 | TUERCA GUIA | GUIDE NUT | 1 | 3 | 5 | 3 | 5 | | | |
| 8 | U112401000 | TOBERA Ø 1,55 BP (10500) | NOZZLE Ø 1.55 BP (10500) | 1 | 1 | 1 | 1 | 1 | | | |
| 8 | 631600000 | TOBERA Ø 2,40 GN (10500) | NOZZLE Ø 2.40 GN (10500) | 1 | 1 | 1 | 1 | 1 | | | |
| 9 | U235706000 | VENTURI 10.500 | VENTURI 10,500 | 1 | 1 | 1 | 1 | 1 | | | ELIMINADO 01.12.09 |
| 9 | U235707000 | VENTURI 10.500 | VENTURI 10,500 | 1 | 1 | 1 | 1 | 1 | | | INTRODUCIDO 01.12.09 |
| 10 | U025706000 | REGULADOR DE AIRE 10.000 | AIR CONTROL 10.000 | 1 | 1 | 1 | 1 | 1 | | | |
| | Q132054000 | VARILLA ROSCADA M6x12 | THREADED ROD M6X12 | 1 | 1 | 1 | 1 | 1 | | | |
| | Q162004000 | TUERCA EXAGONAL M6 | HEXAGONAL NUT M6 | 1 | 1 | 1 | 1 | 1 | | | |
| 11 | U025711000 | CUERPO QUEMADOR 10.000Kcal/H | BURNER BODY 10,000 Kcal/H | 1 | 1 | 1 | 1 | 1 | | | |
| | Q371028000 | MANGUITO DE SUJECION Ø 3x14 | HANDLE Ø 3x14 | 1 | 2 | 2 | 2 | 2 | | | |
| | Q372004000 | PASADOR ELASTICO 5x20 | ELASTIC PIN 5x20 | 1 | 1 | 1 | 1 | 1 | | | |
| 12 | U235701500 | DIFUSOR 10.500 Kcal/H | DIFFUSER 10.500 Kcal/H | 1 | 1 | 1 | 1 | 1 | | | ELIMINADO 22.10.12 |
| 12 | 12047137 | DIFUSOR 10.500 (AGUJ Y PINTA) | DIFFUSER 10.500 | 1 | 1 | 1 | 1 | 1 | | | INTRODUCIDO 22.10.12 |
| | Q012045000 | TORNILLO EXAGONAL M6x30 A304 | HEXAGONAL BOLT M6x30 A304 | 1 | 1 | 1 | 1 | 1 | | | |
| | Q302022000 | ARANDELA 16x6x1,2 A304 | WASHER 16x6x1.2 A304 | 1 | 1 | 1 | 1 | 1 | | | |
| | | | | | | | | | | | |

| MOD. | COCINAS | ZONA | QUEMADORES / BURNERS | PLANO | C-2342<br>C-2343 |
|---|---|---|---|---|---|

| ITEM | CODIGO | DENOMINACION | TEXTO | CG9-20 H | CG9-40 H | CG9-60 H | CG9-41 H | CG9-61 H | | | NOTAS |
|---|---|---|---|---|---|---|---|---|---|---|---|
| 13 | U915703000 | PROTEC. PILOTO QUEMAD. 7000 | BURNER PILOT GUARD 7000 | 1 | 1 | 1 | 1 | 1 | | | |
| | 12093788 | ESPARRAGO ALLEN M3x12 | ALLEN M3x12 ROD | 1 | 1 | 1 | 1 | 1 | | | |
| 14 | U025712000 | PROTEC. PILOTO QUEMAD. 4000 | BURNER PILOT GUARD 4000 | _ | _ | _ | _ | _ | | | |
| | 12093788 | ESPARRAGO ALLEN M3x12 | ALLEN M3x12 ROD | _ | _ | _ | _ | _ | | | |
| 15 | U445731500 | QUEMADOR 4000 (00545-010) | BURNER 4000 (00545-010) | _ | _ | _ | _ | _ | | | |
| | Q012045000 | TORNILLO EXAGONAL M6x30 A304 | HEXAGONAL BOLT M6x30 A304 | _ | _ | _ | _ | _ | | | |
| | Q302022000 | ARANDELA 16x6x1,2 A304 | WASHER 16x6x1.2 A304 | _ | _ | _ | _ | _ | | | |
| 16 | U025709000 | CUERPO QUEMADOR 4000Kcal/H | BURNER BODY 4000 Kcal/H | _ | _ | _ | _ | _ | | | |
| | Q371026000 | MANGUITO DE SUJECION Ø 4x14 | HANDLE Ø 4x14 | _ | _ | _ | _ | _ | | | |
| | Q372004000 | PASADOR ELASTICO 5x20 | ELASTIC PIN 5x20 | _ | _ | _ | _ | _ | | | |
| 17 | U265702000 | REGULADOR AIRE | AIR CONTROLLER | _ | _ | _ | _ | _ | | | |
| | Q132042000 | VARILLA ROSCADA M6 x 15 | THREADED ROD M6 x 15 | _ | _ | _ | _ | _ | | | |
| | Q162004000 | TUERCA EXAGONAL M6 | HEXAGONAL NUT M6 | _ | _ | _ | _ | _ | | | |
| 18 | U125720000 | VENTURI QUEMADOR 4000 kcl | VENTURI BURNER 4000 kcl | _ | _ | _ | _ | _ | | | |
| 19 | X312400000 | TOBERA Ø 1,10 BP (4000) | NOZZLE Ø 1.10 BP (4000) | _ | _ | _ | _ | _ | | | |
| 19 | R302400000 | TOBERA Ø 1,65 GN (4000) | NOZZLE Ø 1.65 GN (4000) | _ | _ | _ | _ | _ | | | |
| 20 | U915613000 | DEFLECTOR QUEMADOR HORNO | OVEN BURNER DEFLECTOR | _ | _ | _ | 2 | 2 | | | |
| | Q152004000 | TORNIL, APLASTADO M5x13 A304 | FLAT HEADED BOLT M5x13 A304 | _ | _ | _ | 1 | 1 | | | |
| | Q302022000 | ARANDELA 16x6x1,2 A304 | WASHER 16x6x1.2 A304 | _ | _ | _ | 1 | 1 | | | |
| 22 | U105635000 | AMARRE QUEMADOR HORNO(HG) | OVEN BURNER FASTENING (HG) | _ | _ | _ | 1 | 1 | | | |
| | Q012031000 | TORNILLO EXAGONAL M5x10 A304 | HEXAGONAL BOLT M5x10 A304 | _ | _ | _ | 2 | 2 | | | |
| | Q222041000 | REMACHE EXAGONAL M4 (INOX) | HEXAGONAL RIVET M4 (INOX) | _ | _ | _ | 4 | 4 | | | |
| 23 | X505724000 | MANGUITO PORTATOBERAS | NOZZLE HOLDER SLEEVE | _ | _ | _ | 1 | 1 | | | |
| 24 | Q223019000 | TUERCA 3/8 GAS LATÓN | NUT 3/8 GAS BRASS | _ | _ | _ | 1 | 1 | | | |
| 25 | X505013000 | REGULADOR DE AIRE POLIDORO | POLIDORO AIR CONTROL | _ | _ | _ | 1 | 1 | | | |
| | Q031322000 | TORNILLO ALOMADO M4X15 | CURVED SCREW M4X15 | _ | _ | _ | 1 | 1 | | | |
| 26 | U105701000 | QUEMADOR HORNO | OVEN BURNER. | _ | _ | _ | 1 | 1 | | | |
| | Q042022000 | TORNILLO AVELLLANADO M4X15 | COUNTERSUNK BOLT M4x15 | _ | _ | _ | 4 | 4 | | | |
| S/Nº | U052401000 | TOBERA Ø 1,45 BP | NOZZLE Ø 1.45 BP | _ | _ | _ | 1 | 1 | | | |
| S/Nº | U262400000 | TOBERA Ø 2,15 GN | NOZZLE Ø 2.15 GN | _ | _ | _ | 1 | 1 | | | |
| | | | | | | | | | | | |

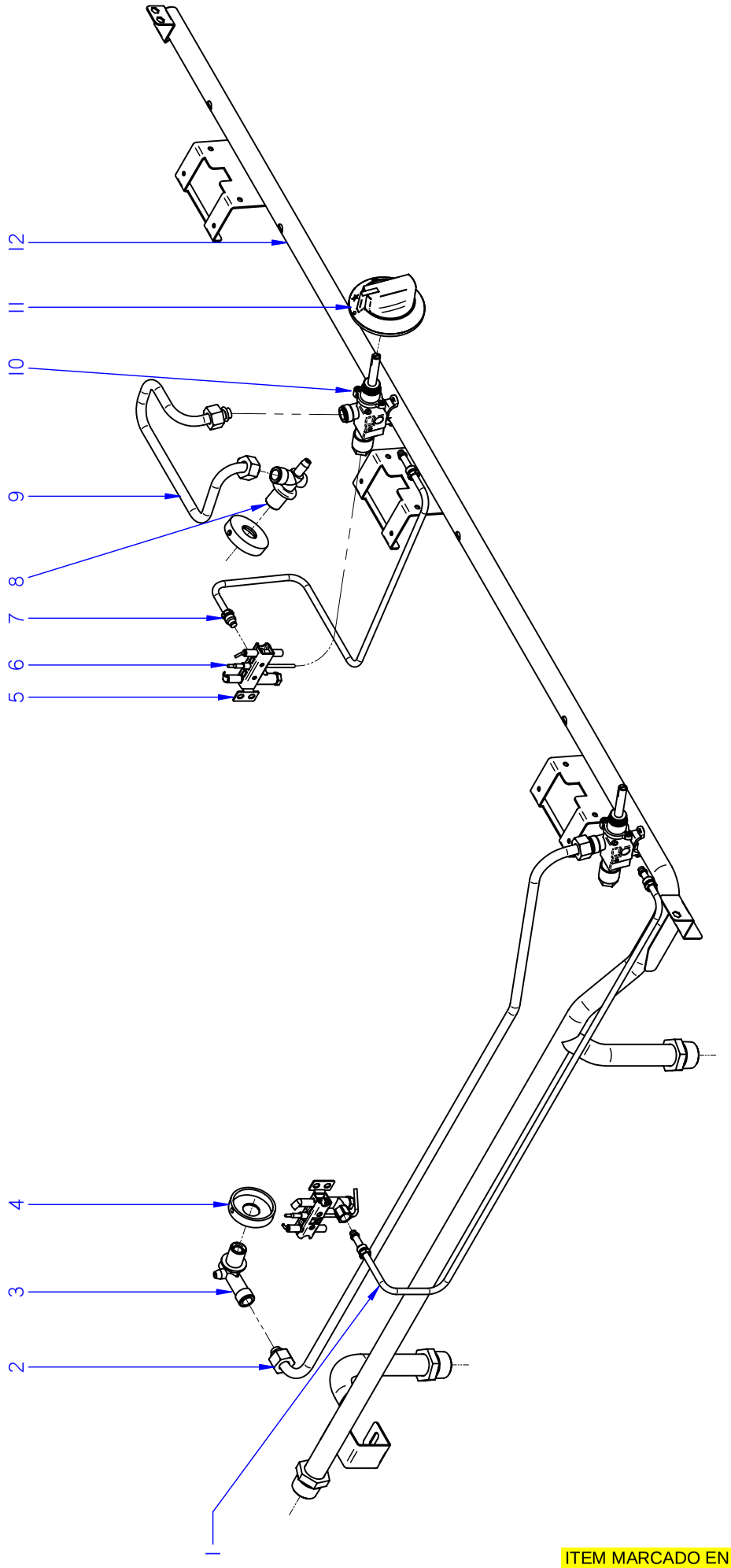


ITEM MARCADO EN COLOR = REPUESTO RECOMENDADO
COLOURED ITEM = RECOMMENDED SPARE PART

| N plano | Firma | Fecha | Aparato | | Lamina | |
|---|---|---|---|---|---|---|
| C-2344 | | 2009-06 | CONDUCCIONES Y GRIFOS<br>COCINA CG9-20 / 40 / 60 / CGE9-41 | | 5 | Fagor Industrial S.Coop.<br>Oñate |

| MOD. | COCINAS | ZONA | CONDUCCIONES Y GRIFOS / PIPES AND TAPS | PLANO | C-2344 |
|---|---|---|---|---|---|

| ITEM | CODIGO | DENOMINACION | TEXTO | CG9-20 | CG9-40 | CG9-60 | CGE9-41 | | | | NOTAS |
|---|---|---|---|---|---|---|---|---|---|---|---|
| 1 | U025053000 | TUBO PILOTO POST. COMPLETO | REAR PILOT PIPE COMPLETE | 1 | 2 | 3 | 2 | | | | ELIMINADO 01.07.2013 |
| 1 | 12010670 | TUBO PILOTO POST. COMPL. G900 | REAR PILOT PIPE COMPL. G900 | 1 | 2 | 3 | 2 | | | | INTRODUCIDO 01.07.2013 |
| S/Nº | 12008715 | RACORD BICONO 6 958.031 | BICONE CONNECTION 6 958.031 | 2 | 4 | 6 | 2 | | | | INTRODUCIDO 01.07.2013 |
| 2 | U025059000 | CON. QUEMADOR POSTER. COMP. | REAR BURNER UNIT COMP. | 1 | 2 | 3 | 2 | | | | ELIMINADO 01.07.2013 |
| 2 | 12009286 | CON. QUEMADOR POSTE. COM. AD | REAR BURNER UNIT COMP. AD | 1 | 2 | 3 | 2 | | | | INTRODUCIDO 01.07.2013 |
| 3 | U915014000 | PORTATOBERAS HORNO | OVEN NOZZLE HOLDER | 1 | 2 | 3 | 2 | | | | |
| | Q153002000 | TORNILLO TAPON | CAP BOLT | 1 | 2 | 3 | 2 | | | | |
| 4 | U022619000 | POSICIONADOR PORTATOB. 4000 | NOZZLE-HOLDER POSITION. 400( | 2 | 3 | 5 | 3 | | | | |
| S/Nº | U022620000 | POSICIONADOR PORTATOB. G900 | NOZZLE-HOLDER POSITION. G90 | _ | 1 | 1 | 1 | | | | |
| 5 | 12005260 | PILOTO COMPL. COCINAS 1 LLAM | 1 FLAME COMPLETE PILOT | 2 | 4 | 6 | 4 | | | | |
| S/Nº | X012126000 | CUERPO SIN RAC. 901.210 B-P | BODY WITHOUT CONNEC. 901.21 | 2 | 4 | 6 | 4 | | | | |
| S/Nº | U442137000 | INYECTOR Ø 0,4 G-N | INJECTOR Ø 0.4 GN. | 2 | 4 | 6 | 4 | | | | |
| S/Nº | U912107000 | CABEZA PILOTO 1 LLAMA (G 700 | PILOT HEAD 1 FLAME (G 700) | 2 | 4 | 6 | 4 | | | | |
| S/Nº | U442130000 | AMARRE TRASERO PI 978.009 | REAR FASTEN. PI 978.009 | 2 | 4 | 6 | 4 | | | | |
| S/Nº | X012116000 | TORNILLO AMA. 953.007 | FAST. BOLT 953.007 | 2 | 4 | 6 | 4 | | | | |
| S/Nº | X012122000 | REGULADOR AIRE 912.001 | AIR CONTROL 912.001 | 2 | 4 | 6 | 4 | | | | |
| S/Nº | U442131000 | AMARRE DELANTERO PI 978.021 | FRONT FASTENING PI 978.021 | 2 | 4 | 6 | 4 | | | | |
| 6 | U222130000 | TERMOPAR L=600 | THERMOCOUPLE L=600 | 1 | 2 | 3 | 2 | | | | |
| S/Nº | U262130000 | TERMOPAR L=1000 | THERMOCOUPLE L=1000 | 1 | 2 | 3 | 2 | | | | |
| 7 | U025057000 | TUBO PILOTO ANT. COMPLETO | FRONT PILOT PIPE COMPLETE | 1 | 2 | 3 | 2 | | | | ELIMINADO 01.07.2013 |
| 7 | 12010672 | TUBO PILOTO ANT. COMPLE. G900 | FRONT PILOT PIPE COMP. G900 | 1 | 2 | 3 | 2 | | | | INTRODUCIDO 01.07.2013 |
| S/Nº | 12008715 | RACORD BICONO 6 958.031 | BICONE CONNECTION 6 958.031 | 2 | 4 | 6 | 2 | | | | INTRODUCIDO 01.07.2013 |
| 8 | U265033000 | PORTATOBERAS Ø10 | NOZZLE HOLDER Ø10 | 1 | 2 | 3 | 2 | | | | |
| | Q153002000 | TORNILLO TAPON | CAP BOLT | 1 | 2 | 3 | 2 | | | | |
| 9 | U025055000 | CONDUC. QUEMADOR ANT. COMPL. | FRONT BURNER PIPE COMPL. | 1 | 2 | 3 | 2 | | | | ELIMINADO 01.07.2013 |
| 9 | 12009185 | CONDUC. QUEMADOR ANT.COM AD | FRONT BURNER PIPE COMPL.AD | 1 | 2 | 3 | 2 | | | | INTRODUCIDO 01.07.2013 |
| | | | | | | | | | | | |
| | | | | | | | | | | | |
| | | | | | | | | | | | |
| | | | | | | | | | | | |
| | | | | | | | | | | | |

| MOD. | COCINAS | ZONA | CONDUCCIONES Y GRIFOS / PIPES AND TAPS | PLANO | C-2344 |
|---|---|---|---|---|---|

| ITEM | CODIGO | DENOMINACION | TEXTO | CG9-20 | CG9-40 | CG9-60 | CGE9-41 | | | | NOTAS |
|---|---|---|---|---|---|---|---|---|---|---|---|
| 10 | U912115000 | GRIFO 18700 BY-PASS 0,75 | TAP 18700 BY-PASS 0.75 | 1 | 2 | 3 | 2 | | | | |
| 10 | U912109000 | GRIFO 18700 BY-PASS 1,15 | TAP 18700 BY-PASS 1.15 | 1 | 1 | 2 | 1 | | | | |
| 10 | U912117000 | GRIFO 18700 BY-PASS 1,45 | TAP 18700 BY-PASS 1.45 | _ | 1 | 1 | 1 | | | | |
| S/Nº | U912104000 | BRIDA AMARRE GRIFO 1/2" | TAP FASTENING FLANGE 1/2" | 2 | 4 | 6 | 4 | | | | |
| S/Nº | Q122032000 | TORNILLO ALLEN M5x15 | ALLEN BOLT M5x15 | 2 | 4 | 6 | 4 | | | | |
| 11 | U022117000 | MANDO MONT COCINA GAS Ø8 | GAS COOK. ASSEMBLY CTRL Ø8 | 2 | 4 | 6 | 4 | | | | |
| 12 | U015010000 | DISTRIBUIDOR COMPLET. CG9-20 | COMPL. DISTRIBUTOR CG9-20 | 1 | _ | _ | _ | | | | |
| 12 | U025042000 | DISTRIBUIDOR COMPLET. CG9-40 | COMPL. DISTRIBUTOR CG9-40 | _ | 1 | _ | _ | | | | |
| 12 | U075004000 | DISTRIBUIDOR COMPLET. CG9-60 | COMPL. DISTRIBUTOR CG9-60 | _ | _ | 1 | _ | | | | |
| 12 | U225003000 | DISTRIBUIDOR COMPLE. CGE9-41 | COMPL. DISTRIBUTOR CGE9-41 | _ | _ | _ | 1 | | | | |

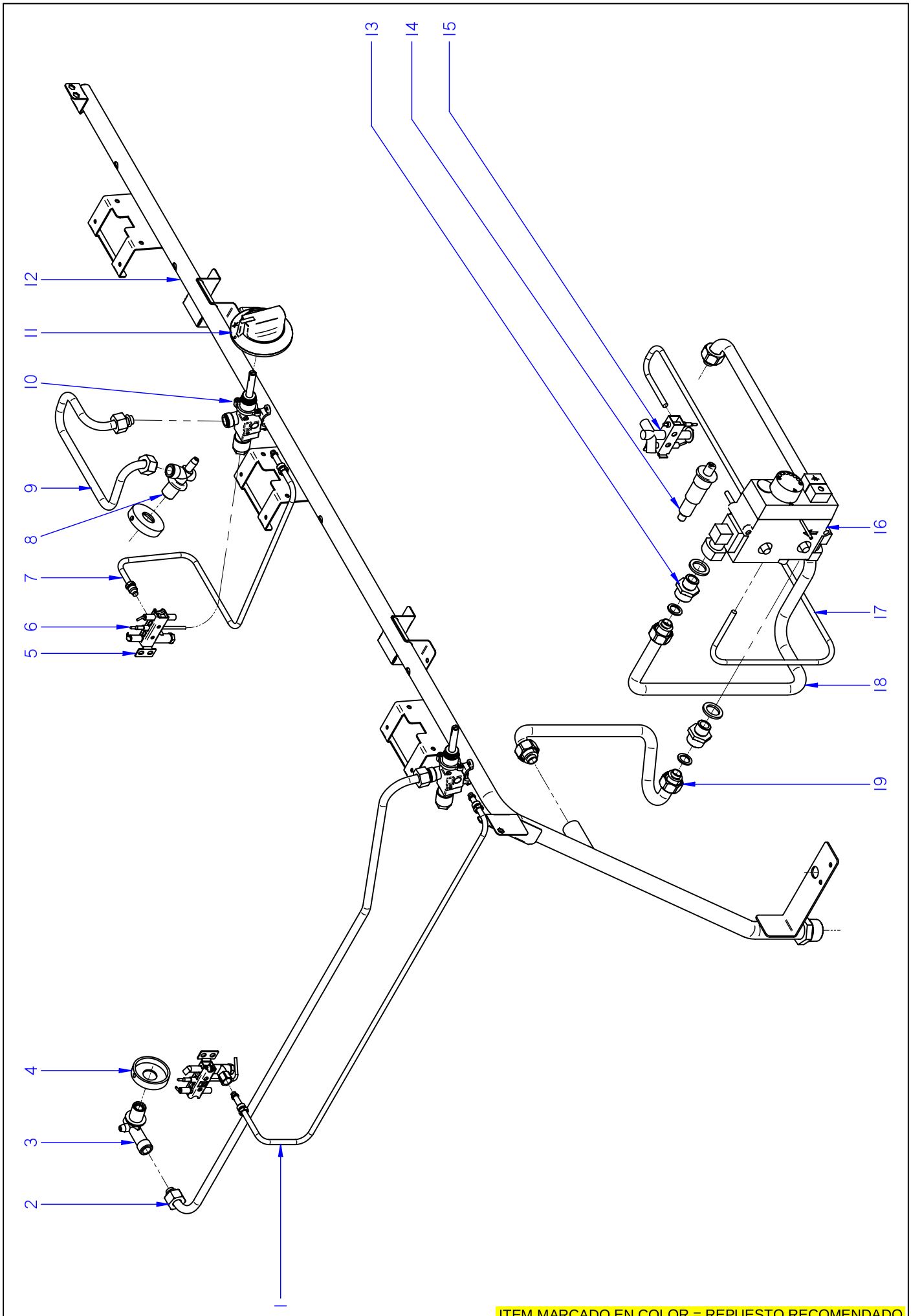


ITEM MARCADO EN COLOR = REPUESTO RECOMENDADO
COLOURED ITEM = RECOMMENDED SPARE PART

| N plano | Firma | Fecha | Aparato | | Lamina | |
|---|---|---|---|---|---|---|
| C-2345 | | 2009-06 | CONDUCCIONES Y GRIFOS<br>COCINA CG9-41 / 61 / 82 / 61 OP | | 6 | Fagor Industrial S.Coop.<br>Oñate |

| MOD. | COCINAS | ZONA | CONDUCCIONES Y GRIFOS / PIPES AND TAPS | PLANO | C-2345 |
|---|---|---|---|---|---|

| ITEM | CODIGO | DENOMINACION | TEXTO | CG9-41 | CG9-61 | CG9-82 | CG9-61 OP | | | | NOTAS |
|---|---|---|---|---|---|---|---|---|---|---|---|
| 1 | U025053000 | TUBO PILOTO POST. COMPLETO | REAR PILOT PIPE COMPLETE | 2 | 3 | 4 | 3 | | | | ELIMINADO 01.07.2013 |
| 1 | 12010670 | TUBO PILOTO POST. COMPL. G900 | REAR PILOT PIPE COMPL. G900 | 2 | 3 | 4 | 3 | | | | INTRODUCIDO 01.07.2013 |
| S/Nº | 12008715 | RACORD BICONO 6 958.031 | BICONE CONNECTION 6 958.031 | 4 | 6 | 8 | 6 | | | | INTRODUCIDO 01.07.2013 |
| 2 | U025059000 | CON. QUEMADOR POSTER. COMP. | REAR BURNER UNIT COMP. | 2 | 3 | 4 | 3 | | | | ELIMINADO 01.07.2013 |
| 2 | 12009286 | CON. QUEMADOR POSTE. COM. AD | REAR BURNER UNIT COMP. AD | 2 | 3 | 4 | 3 | | | | INTRODUCIDO 01.07.2013 |
| 3 | U915014000 | PORTATOBERAS HORNO | OVEN NOZZLE HOLDER | 2 | 3 | 4 | 3 | | | | |
| | Q153002000 | TORNILLO TAPON | CAP BOLT | 2 | 3 | 4 | 3 | | | | |
| 4 | U022619000 | POSICIONADOR PORTATOB. 4000 | NOZZLE-HOLDER POSITION. 400 | 3 | 5 | 6 | 5 | | | | |
| S/Nº | U022620000 | POSICIONADOR PORTATOB. G900 | NOZZLE-HOLDER POSITION. G9 | 1 | 1 | 2 | 1 | | | | |
| 5 | 12005260 | PILOTO COMPL. COCINAS 1 LLAM | 1 FLAME COMPLETE PILOT | 4 | 6 | 8 | 6 | | | | |
| S/Nº | X012126000 | CUERPO SIN RAC. 901.210 | BODY WITHOUT CONNEC. 901.2 | 4 | 6 | 8 | 6 | | | | |
| S/Nº | U442137000 | INYECTOR Ø 0,4 GN | INJECTOR Ø 0.4 GN. | 4 | 6 | 8 | 6 | | | | |
| S/Nº | U912107000 | CABEZA PILOTO 1 LLAMA (G 700 | PILOT HEAD 1 FLAME (G 700) | 4 | 6 | 8 | 6 | | | | |
| S/Nº | U442130000 | AMARRE TRASERO PI 978.009 | REAR FASTEN. PI 978.009 | 4 | 6 | 8 | 6 | | | | |
| S/Nº | X012116000 | TORNILLO AMA. 953.007 | FAST. BOLT 953.007 | 4 | 6 | 8 | 6 | | | | |
| S/Nº | X012122000 | REGULADOR AIRE 912.001 | AIR CONTROL 912.001 | 4 | 6 | 8 | 6 | | | | |
| S/Nº | U442131000 | AMARRE DELANTERO PI 978.021 | FRONT FASTENING PI 978.021 | 4 | 6 | 8 | 6 | | | | |
| 6 | U222130000 | TERMOPAR L=600 | THERMOCOUPLE L=600 | 2 | 3 | 4 | 3 | | | | |
| S/Nº | U262130000 | TERMOPAR L=1000 | THERMOCOUPLE L=1000 | 2 | 3 | 4 | 3 | | | | |
| 7 | U025057000 | TUBO PILOTO ANT. COMPLETO | FRONT PILOT PIPE COMPLETE | 2 | 3 | 4 | 3 | | | | ELIMINADO 01.07.2013 |
| 7 | 12010672 | TUBO PILOTO ANT. COMPLE. G900 | FRONT PILOT PIPE COMP. G900 | 2 | 3 | 4 | 3 | | | | INTRODUCIDO 01.07.2013 |
| S/Nº | 12008715 | RACORD BICONO 6 958.031 | BICONE CONNECTION 6 958.031 | 4 | 6 | 8 | 6 | | | | INTRODUCIDO 01.07.2013 |
| 8 | U265033000 | PORTATOBERAS Ø10 | NOZZLE HOLDER Ø10 | 2 | 3 | 4 | 3 | | | | |
| | Q153002000 | TORNILLO TAPON | CAP BOLT | 2 | 3 | 4 | 3 | | | | |
| 9 | U025055000 | CONDUC. QUEMADOR ANT. COMPL | FRONT BURNER PIPE COMPL. | 2 | 3 | 4 | 3 | | | | ELIMINADO 01.07.2013 |
| 9 | 12009185 | CONDUC. QUEMADOR ANT.COM AD | FRONT BURNER PIPE COMPL.AD | 2 | 3 | 4 | 3 | | | | INTRODUCIDO 01.07.2013 |
| 10 | U912115000 | GRIFO 18700 BY-PASS 0,75 | TAP 18700 BY-PASS 0.75 | 2 | 3 | 4 | 3 | | | | |
| 10 | U912109000 | GRIFO 18700 BY-PASS 1,15 | TAP 18700 BY-PASS 1.15 | 1 | 2 | 2 | 2 | | | | |
| 10 | U912117000 | GRIFO 18700 BY-PASS 1,45 | TAP 18700 BY-PASS 1.45 | 1 | 1 | 2 | 1 | | | | |
| S/Nº | U912104000 | BRIDA AMARRE GRIFO 1/2" | TAP FASTENING FLANGE 1/2" | 4 | 6 | 8 | 6 | | | | |
| S/Nº | Q122032000 | TORNILLO ALLEN M5x15 | ALLEN BOLT M5x15 | 4 | 6 | 8 | 6 | | | | |

| MOD. | COCINAS | ZONA | CONDUCCIONES Y GRIFOS / PIPES AND TAPS | PLANO | C-2345 |
|---|---|---|---|---|---|

| ITEM | CODIGO | DENOMINACION | TEXTO | CG9-41 | CG9-61 | CG9-82 | CG9-61 OP | | | | NOTAS |
|---|---|---|---|---|---|---|---|---|---|---|---|
| 11 | U022117000 | MANDO MONT COCINA GAS Ø8 | GAS COOK. ASSEMBLY CTRL Ø8 | 4 | 6 | 8 | 6 | | | | |
| 12 | U025039000 | DISTRIBUIDOR COMPLET. CG9-41 | COMPLETE DISTRIBUTOR CG9-4 | 1 | _ | 2 | _ | | | | ELIMINADO 01.04.10 |
| 12 | U025066000 | DISTRIBUIDOR COMPLET. CG9-41 | COMPLETE DISTRIBUTOR CG9-4 | 1 | _ | 2 | _ | | | | INTRODUCIDO 01.04.10 |
| 12 | U035004000 | DISTRIBUIDOR COMPLET. CG9-61 | COMPLETE DISTRIBUTOR CG9-6 | _ | 1 | _ | 1 | | | | ELIMINADO 01.04.10 |
| 12 | U035005000 | DISTRIBUIDOR COMPLET. CG9-61 | COMPLETE DISTRIBUTOR CG9-6 | _ | 1 | _ | 1 | | | | INTRODUCIDO 01.04.10 |
| | Q152004000 | TORNILLO APLASTADO M5x13 | FLAT HEAD SCREW M5X13 | 2 | 2 | 8 | 2 | | | | |
| 13 | U202103000 | MANGUITO REDUCCION 1/2-3/8" | REDUCTION HOSE 1/2-3/8" | 2 | 2 | 4 | 2 | | | | |
| | Q306058000 | ARANDELA 25x17X2.5 | WASHER 25x17X2.5 | 2 | 2 | 4 | 2 | | | | |
| 14 | S113034000 | PIEZOELECTRICO | PIEZOELECTRIC | 1 | 1 | 2 | 1 | | | | ELIMINADO 02.05.12 |
| 14 | 12043897 | PIEZOELECTRICO COMPLETO | COMPLETE PIEZOELECTRIC | 1 | 1 | 2 | 1 | | | | INTRODUCIDO 02.05.12 |
| S/Nº | 12043907 | ANILLO ADAPTADOR | ADAPTER RING | 1 | 1 | 2 | 1 | | | | INTRODUCIDO 02.05.12 |
| S/Nº | U333003000 | CABLE MASA ENCENDEDOR | LIGHTER EARTH CABLE | 1 | 1 | 2 | 1 | | | | ELIMINADO 02.05.12 |
| S/Nº | U323030000 | CABLE BUJIA | SPARK PLUG CABLE | 1 | 1 | 2 | 1 | | | | |
| S/Nº | X022131000 | BUJIA | SPARK PLUG | 1 | 1 | 2 | 1 | | | | |
| 15 | U322118000 | PILOTO COMPLETO 100.062 | COMPLETE PILOT LIGHT 100,062 | 1 | 1 | 2 | 1 | | | | |
| S/Nº | U442137000 | INYECTOR Ø 0,4 GN | INJECTOR Ø 0.4 GN. | 1 | 1 | 2 | 1 | | | | |
| S/Nº | U562130000 | TERMOPAR L=850 | THERMOCOUPLE L=850 | 1 | 1 | 2 | 1 | | | | |
| 16 | U134324000 | VALVULA MINISIT 0710.654 | VALVE MINISIT 0710.654 | 1 | 1 | 2 | 1 | | | | |
| S/Nº | Q307041000 | JUNTA TORICA 25,4x20,2x2,6 | O-RING 25.4x20.2x2.6 | 2 | 2 | 4 | 2 | | | | |
| S/Nº | U134317000 | MANDO NEGRO MINI 916.124 | BLACK CTRL. MINI 916.124 | 1 | 1 | 2 | 1 | | | | |
| S/Nº | U134318000 | CUBIERTA MINISIT 903.052 | COVER MINISIT 903.052 | 1 | 1 | 2 | 1 | | | | |
| S/Nº | Q031322000 | TORNILLO ALOMADO M4x15 | CURVED SCREW M4X15 | 8 | 8 | 16 | 8 | | | | |
| S/Nº | U264300000 | RACOR 3/8 906,252 | CONNECTION 3/8 906.252 | 2 | 2 | 4 | 2 | | | | |
| S/Nº | U134323000 | RACORD BICONO 6 958.031 | BICONE CONNECTION 6 958.031 | 1 | 1 | 2 | 1 | | | | |
| 17 | U025062000 | TUBO PILOTO EUROSIT QUEM. | PILOT PIPE EUROSIT BURNER | 1 | 1 | 2 | _ | | | | |
| 17 | U105008000 | TUBO PILOTO HORNO | PILOT PIPE BURNER | _ | _ | _ | 1 | | | | |
| | U134323000 | RACORD BICONO 6 958.031 | BICONE CONNECTION 6 958.031 | 2 | 2 | 4 | 2 | | | | |
| 18 | U025061000 | TUBO COMPLETO EUROSIT QUEMA. | COMPLETE PIPE EUROSIT BURN | 1 | 1 | 2 | _ | | | | |
| 18 | U105002000 | TUBO COMPLETO QUEMADOR | COMPLETE PIPE BURNER | _ | _ | _ | 1 | | | | |
| 19 | U025050000 | ENTRADA MINISIT COMPL CG900 | INPUT MINISIT COMPL CG900 | 1 | 1 | 2 | 1 | | | | |
| | Q306062000 | ARANDELA Ø13,9X10,33x1,5 | WASHER Ø13.9X10.33x1.5 | 8 | 8 | 16 | 8 | | | | |

| MOD. | COCINAS | ZONA | CONDUCCIONES Y GRIFOS / PIPES AND TAPS | PLANO | C-2344<br>C-2345 |
|---|---|---|---|---|---|

| ITEM | CODIGO | DENOMINACION | TEXTO | CG9-20 H | CG9-40 H | CG9-60 H | CG9-41 H | CG9-61 H | | | NOTAS |
|---|---|---|---|---|---|---|---|---|---|---|---|
| 1 | U025053000 | TUBO PILOTO POST. COMPLETO | REAR PILOT PIPE COMPLETE | 1 | 2 | 3 | 2 | 3 | | | ELIMINADO 01.07.2013 |
| 1 | 12010670 | TUBO PILOTO POST. COMPL. G900 | REAR PILOT PIPE COMPL. G900 | 1 | 2 | 3 | 2 | 3 | | | INTRODUCIDO 01.07.2013 |
| S/Nº | 12008715 | RACORD BICONO 6 958.031 | BICONE CONNECTION 6 958.031 | 2 | 4 | 6 | 4 | 6 | | | INTRODUCIDO 01.07.2013 |
| 2 | U025059000 | CON. QUEMADOR POSTER. COMP. | REAR BURNER UNIT COMP. | 1 | 2 | 3 | 2 | 3 | | | ELIMINADO 01.07.2013 |
| 2 | 12009286 | CON. QUEMADOR POSTE. COM. AD | REAR BURNER UNIT COMP. AD | 1 | 2 | 3 | 2 | 3 | | | INTRODUCIDO 01.07.2013 |
| 3 | U915014000 | PORTATOBERAS HORNO | OVEN NOZZLE HOLDER | 1 | 2 | 3 | 2 | 3 | | | |
| | Q153002000 | TORNILLO TAPON | CAP BOLT | 1 | 2 | 3 | 2 | 3 | | | |
| 4 | U022619000 | POSICIONADOR PORTATOB. 4000 | NOZZLE-HOLDER POSITION. 400 | 2 | 3 | 5 | 3 | 5 | | | |
| S/Nº | U022620000 | POSICIONADOR PORTATOB. G900 | NOZZLE-HOLDER POSITION. G90 | _ | 1 | 1 | 1 | 1 | | | |
| 5 | 12005260 | PILOTO COMPL. COCINAS 1 LLAM | 1 FLAME COMPLETE PILOT | 2 | 4 | 6 | 4 | 6 | | | |
| S/Nº | X012126000 | CUERPO SIN RAC. 901.210 B-P | BODY WITHOUT CONNEC. 901.21 | 2 | 4 | 6 | 4 | 6 | | | |
| S/Nº | U442136000 | CUERPO SIN RACORD G-N | BODY WITHOUT CONNEC. 901.21 | 2 | 4 | 6 | 4 | 6 | | | |
| S/Nº | U442137000 | INYECTOR Ø 0,4 G-N | INJECTOR Ø 0.4 GN. | 2 | 4 | 6 | 4 | 6 | | | |
| S/Nº | U912107000 | CABEZA PILOTO 1 LLAMA (G 700 | PILOT HEAD 1 FLAME (G 700) | 2 | 4 | 6 | 4 | 6 | | | |
| S/Nº | U442130000 | AMARRE TRASERO PI 978.009 | REAR FASTEN. PI 978.009 | 2 | 4 | 6 | 4 | 6 | | | |
| S/Nº | X012116000 | TORNILLO AMA. 953.007 | FAST. BOLT 953.007 | 2 | 4 | 6 | 4 | 6 | | | |
| S/Nº | X012122000 | REGULADOR AIRE 912.001 | AIR CONTROL 912.001 | 2 | 4 | 6 | 4 | 6 | | | |
| S/Nº | U442131000 | AMARRE DELANTERO PI 978.021 | FRONT FASTENING PI 978.021 | 2 | 4 | 6 | 4 | 6 | | | |
| 6 | U222130000 | TERMOPAR L=600 | THERMOCOUPLE L=600 | 1 | 2 | 3 | 2 | 3 | | | |
| S/Nº | U262130000 | TERMOPAR L=1000 | THERMOCOUPLE L=1000 | 1 | 2 | 3 | 2 | 3 | | | |
| 7 | U025057000 | TUBO PILOTO ANT. COMPLETO | FRONT PILOT PIPE COMPLETE | 1 | 2 | 3 | 2 | 3 | | | ELIMINADO 01.07.2013 |
| 7 | 12010672 | TUBO PILOTO ANT. COMPLE. G900 | FRONT PILOT PIPE COMP. G900 | 1 | 2 | 3 | 2 | 3 | | | INTRODUCIDO 01.07.2013 |
| S/Nº | 12008715 | RACORD BICONO 6 958.031 | BICONE CONNECTION 6 958.031 | 2 | 4 | 6 | 4 | 6 | | | INTRODUCIDO 01.07.2013 |
| 8 | U265033000 | PORTATOBERAS Ø10 | NOZZLE HOLDER Ø10 | 1 | 2 | 3 | 2 | 3 | | | |
| | Q153002000 | TORNILLO TAPON | CAP BOLT | 1 | 2 | 3 | 2 | 3 | | | |
| 9 | U025055000 | CONDUC. QUEMADOR ANT. COMPL. | FRONT BURNER PIPE COMPL. | 1 | 2 | 3 | 2 | 3 | | | ELIMINADO 01.07.2013 |
| 9 | 12009185 | CONDUC. QUEMADOR ANT.COM AD | FRONT BURNER PIPE COMPL.AD | 1 | 2 | 3 | 2 | 3 | | | INTRODUCIDO 01.07.2013 |
| 10 | U912109000 | GRIFO 18700 BY-PASS 1,15 | TAP 18700 BY-PASS 1.15 | 1 | 3 | 5 | 3 | 5 | | | |
| 10 | U912117000 | GRIFO 18700 BY-PASS 1,45 | TAP 18700 BY-PASS 1.45 | 1 | 1 | 1 | 1 | 1 | | | |
| S/Nº | U912104000 | BRIDA AMARRE GRIFO 1/2" | TAP FASTENING FLANGE 1/2" | 2 | 4 | 6 | 4 | 6 | | | |
| S/Nº | Q122032000 | TORNILLO ALLEN M5x15 | ALLEN BOLT M5x15 | 2 | 4 | 6 | 4 | 6 | | | |

| MOD. | COCINAS | ZONA | CONDUCCIONES Y GRIFOS / PIPES AND TAPS | PLANO | C-2344<br>C-2345 |
|---|---|---|---|---|---|

| ITEM | CODIGO | DENOMINACION | TEXTO | CG9-20 H | CG9-40 H | CG9-60 H | CG9-41 H | CG9-61 H | | | NOTAS |
|---|---|---|---|---|---|---|---|---|---|---|---|
| 11 | U022117000 | MANDO MONT COCINA GAS Ø8 | GAS COOK. ASSEMBLY CTRL Ø8 | 2 | 4 | 6 | 4 | 6 | | | |
| 12 | U015010000 | DISTRIBUIDOR COMPLET. CG9-20 | COMPL. DISTRIBUTOR CG9-20 | 1 | _ | _ | _ | _ | | | |
| 12 | U025042000 | DISTRIBUIDOR COMPLET. CG9-40 | COMPL. DISTRIBUTOR CG9-40 | _ | 1 | _ | _ | _ | | | |
| 12 | U075004000 | DISTRIBUIDOR COMPLET. CG9-60 | COMPL. DISTRIBUTOR CG9-60 | _ | _ | 1 | _ | _ | | | |
| 12 | U025039000 | DISTRIBUIDOR COMPLET. CG9-41 | COMPLETE DISTRIBUTOR CG9-41 | _ | _ | _ | 1 | _ | | | |
| 12 | U035004000 | DISTRIBUIDOR COMPLET. CG9-61 | COMPLETE DISTRIBUTOR CG9-61 | _ | _ | _ | _ | 1 | | | |
| 13 | U202103000 | MANGUITO REDUCCION 1/2-3/8" | REDUCTION HOSE 1/2-3/8" | _ | _ | _ | 2 | 2 | | | |
| | Q306058000 | ARANDELA 25x17X2.5 | WASHER 25x17X2.5 | _ | _ | _ | 2 | 2 | | | |
| 14 | S113034000 | PIEZOELECTRICO | PIEZOELECTRIC | _ | _ | _ | 1 | 1 | | | ELIMINADO 02.05.12 |
| 14 | 12043897 | PIEZOELECTRICO COMPLETO | COMPLETE PIEZOELECTRIC | _ | _ | _ | 1 | 1 | | | INTRODUCIDO 02.05.12 |
| S/Nº | 12043907 | ANILLO ADAPTADOR | ADAPTER RING | _ | _ | _ | 1 | 1 | | | INTRODUCIDO 02.05.12 |
| 14 | S113034000 | PIEZOELECTRICO | PIEZOELECTRIC | _ | _ | _ | 1 | 1 | | | |
| S/Nº | X022131000 | BUJIA | SPARK PLUG | _ | _ | _ | 1 | 1 | | | |
| 15 | U322118000 | PILOTO COMPLETO 100.062 | COMPLETE PILOT LIGHT 100,062 | _ | _ | _ | 1 | 1 | | | |
| S/Nº | U442137000 | INYECTOR Ø 0,4 GN | INJECTOR Ø 0.4 GN. | _ | _ | _ | 1 | 1 | | | |
| S/Nº | U562130000 | TERMOPAR L=850 | THERMOCOUPLE L=850 | _ | _ | _ | 1 | 1 | | | |
| 16 | U134324000 | VALVULA MINISIT 0710.654 | VALVE MINISIT 0710.654 | _ | _ | _ | 1 | 1 | | | |
| S/Nº | Q307041000 | JUNTA TORICA 25,4x20,2x2,6 | O-RING 25.4x20.2x2.6 | _ | _ | _ | 2 | 2 | | | |
| S/Nº | U134317000 | MANDO NEGRO MINI 916.124 | BLACK CTRL. MINI 916.124 | _ | _ | _ | 1 | 1 | | | |
| S/Nº | U134318000 | CUBIERTA MINISIT 903.052 | COVER MINISIT 903.052 | _ | _ | _ | 1 | 1 | | | |
| S/Nº | Q031322000 | TORNILLO ALOMADO M4x15 | CURVED SCREW M4X15 | _ | _ | _ | 8 | 8 | | | |
| S/Nº | U264300000 | RACOR 3/8 906,252 | CONNECTION 3/8 906.252 | _ | _ | _ | 2 | 2 | | | |
| S/Nº | U134323000 | RACORD BICONO 6 958.031 | BICONE CONNECTION 6 958.031 | _ | _ | _ | 1 | 1 | | | |
| 17 | U025062000 | TUBO PILOTO EUROSIT QUEM. | PILOT PIPE EUROSIT BURNER | _ | _ | _ | 1 | 1 | | | |
| 17 | U105008000 | TUBO PILOTO HORNO | PILOT PIPE BURNER | _ | _ | _ | _ | _ | | | |
| | U134323000 | RACORD BICONO 6 958.031 | BICONE CONNECTION 6 958.031 | _ | _ | _ | 2 | 2 | | | |
| 18 | U025061000 | TUBO COMPLETO EUROSIT QUEMA. | COMPLETE PIPE EUROSIT BURN | _ | _ | _ | 1 | 1 | | | |
| 18 | U105002000 | TUBO COMPLETO QUEMADOR | COMPLETE PIPE BURNER | _ | _ | _ | _ | _ | | | |
| 19 | U025050000 | ENTRADA MINISIT COMPL CG900 | INPUT MINISIT COMPL CG900 | _ | _ | _ | 1 | 1 | | | |
| | Q306062000 | ARANDELA Ø13,9X10,33x1,5 | WASHER Ø13.9X10.33x1.5 | _ | _ | _ | 8 | 8 | | | |
| | | | | | | | | | | | |

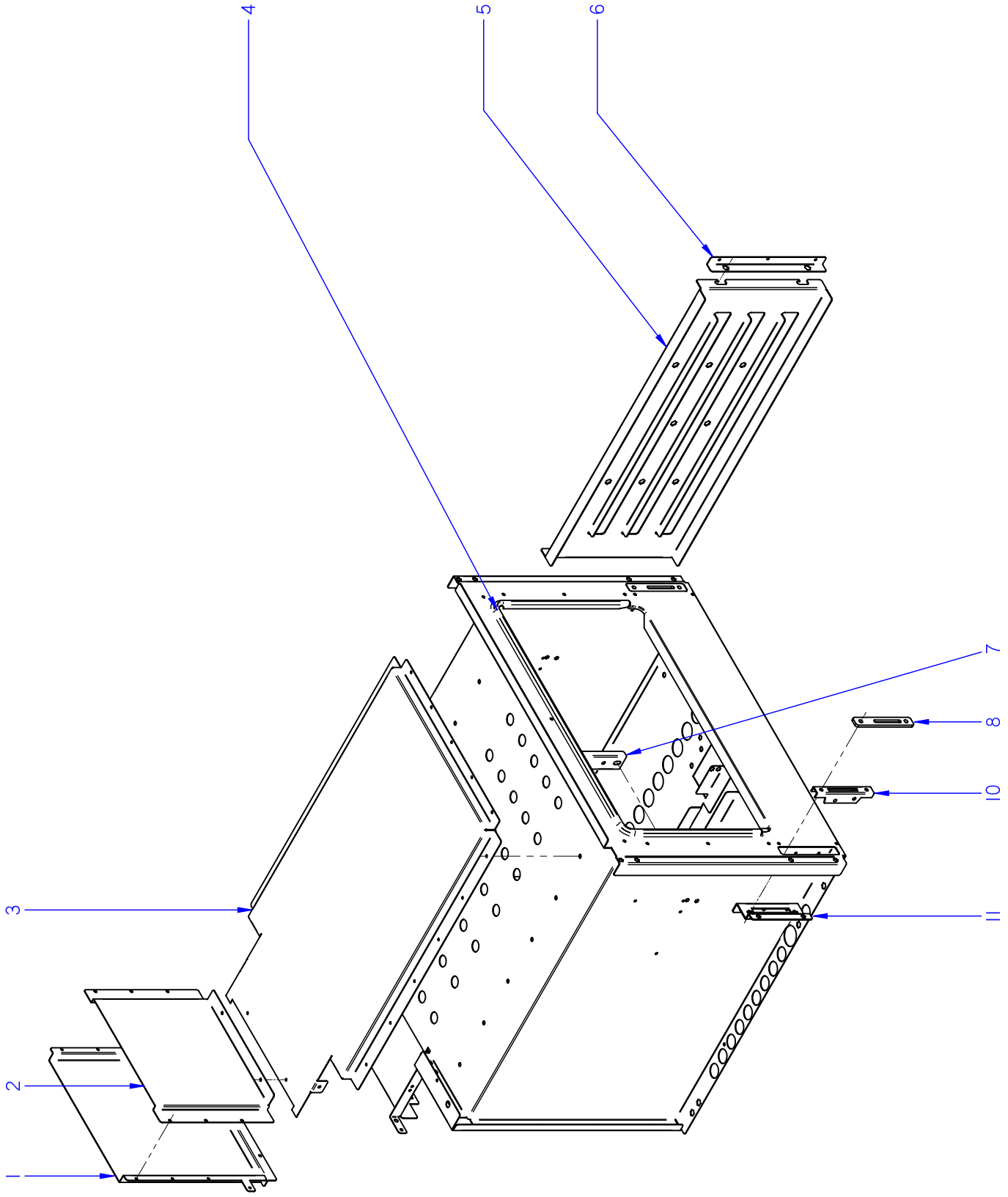


ITEM MARCADO EN COLOR = REPUESTO RECOMENDADO
COLOURED ITEM = RECOMMENDED SPARE PART

| N plano | Firma | Fecha | Aparato | HORNO | Lamina | |
|---|---|---|---|---|---|---|
| C-2346 | | 2009-06 | COCINA CG9-41 / CG9-61 / CG9-82 | | 7 | Fagor Industrial S.Coop. Oñate FAGOR |

| MOD. | COCINAS | ZONA | HORNO / OVEN | PLANO | C-2346 |
|---|---|---|---|---|---|

| ITEM | CODIGO | DENOMINACION | TEXTO | CG9-41 | CG9-61 | CG9-82 | | | | | NOTAS |
|---|---|---|---|---|---|---|---|---|---|---|---|
| 1 | U025638000 | POSTERIOR CHIMENEA G900 | REAR FLUEPIPE G900 | 1 | 1 | 2 | | | | | |
| | Q419005000 | REMACHE 4x8 ALMG3 / ALUMINIO | RIVET 4X8 ALMG3 / ALUMINIUM | 14 | 14 | 28 | | | | | |
| 2 | U025637000 | CHIMENEA ANTERIOR G900 | FRONT FLUEPIPE G900 | 1 | 1 | 2 | | | | | |
| 3 | U022615000 | CAMARA DE HUMOS G900 | SMOKE CHAMBER G900 | 1 | 1 | 2 | | | | | |
| | Q419005000 | REMACHE 4x8 ALMG3 / ALUMINIO | RIVET 4X8 ALMG3 / ALUMINIUM | 19 | 19 | 38 | | | | | |
| 4 | U025623000 | JUNTA PUERTA HORNO INOX. | OVEN DOOR SEAL INOX. | 1 | 1 | 2 | | | | | ELIMINADO 03.01.11 |
| 4 | U965613000 | JUNTA HORNO FIBRA DE VIDRIO | FURNACE FIBERGLASS BOARD | 1 | 1 | 2 | | | | | INTRODUCIDO 03.01.11 |
| 5 | U915607000 | GUIA LATERAL HORNO G700 | OVEN SIDE GUIDE G700 | 2 | 2 | 4 | | | | | |
| | Q151336000 | TORNILLO SOPORTE GUIAS | GUIDE SUPPORT BOLT | 4 | 4 | 8 | | | | | |
| | Q302022000 | ARANDELA 16X6X1.2 A.304 | WASHER 16X6X1.2 A.304 | 4 | 4 | 8 | | | | | |
| | Q221321000 | REMACHE ROSCAD.NUTSERT.M6 | THREADED RIVET .NUTSERT.M6 | 4 | 4 | 8 | | | | | |
| 6 | U915616000 | SUPLEMENTO AMARRE GUIA LAT. | SIDE GUIDE FAST. SUPPL. | 2 | 2 | 4 | | | | | |
| | Q412000000 | REMACHE TUBULAR 4x8 | TUBULAR RIVET 4x8 | 6 | 6 | 12 | | | | | |
| 7 | U055644000 | FIJACION BULBO | FASTENING BULB | 1 | 1 | 2 | | | | | |
| | Q412000000 | REMACHE TUBULAR 4x8 | TUBULAR RIVET 4x8 | 2 | 2 | 4 | | | | | |
| 8 | U915619000 | EMBELLECED GUIA BISAGRA | HINGE GUIDE TRIM | 2 | 2 | 4 | | | | | |
| | Q152045000 | TORNILLO AMARRE M6X25 | FASTENING BOLT M6X25 | 4 | 4 | 4 | | | | | |
| 10 | U010512000 | GUIA DE BISAGRA | HINGE GUIDE | 2 | 2 | 4 | | | | | ELIMINADO 12.12.11 |
| 10 | 12041846 | GUIA BISAGRA G700 Y G900 | HINGE GUIDE G700 Y G900 | 2 | 2 | 4 | | | | | INTRODUCIDO 12.12.11 |
| 11 | U915604000 | AMARRE GUIA BISAGRA HORNO | OVEN HINGE GUIDE FASTENING | 2 | 2 | 4 | | | | | |
| | Q221342000 | REMACHE EXAGONAL M5 | HEXAGONAL RIVET M5 | 2 | 2 | 4 | | | | | |
| | Q412000000 | REMACHE TUBULAR 4x8 | TUBULAR RIVET 4x8 | 6 | 6 | 12 | | | | | |
| | Q222042000 | REMACHE EXAGONAL ROSCA M6 | HEXAGONAL RIVET THREAD M6 | 4 | 4 | 8 | | | | | |
| | | | | | | | | | | | |
| | | | | | | | | | | | |
| | | | | | | | | | | | |
| | | | | | | | | | | | |
| | | | | | | | | | | | |
| | | | | | | | | | | | |
| | | | | | | | | | | | |
| | | | | | | | | | | | |

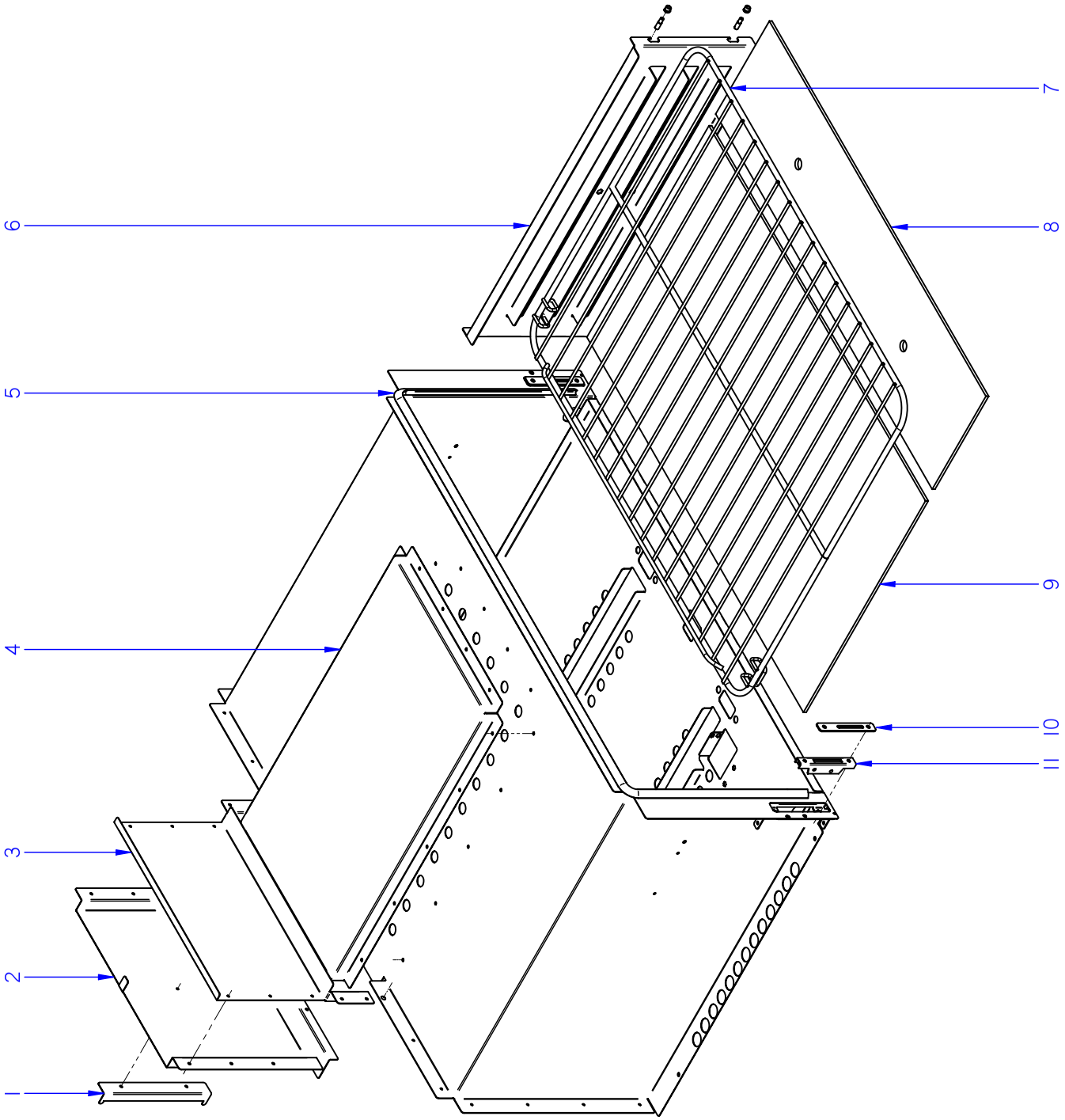


ITEM MARCADO EN COLOR = REPUESTO RECOMENDADO
COLOURED ITEM = RECOMMENDED SPARE PART

| N plano | Firma | Fecha | Aparato | HORNO | Lamina | |
|---|---|---|---|---|---|---|
| C-2347 | | 2009-06 | COCINA CG9-61 OP | | 8 | Fagor Industrial S.Coop. FAGOR Oñate |

| MOD. | COCINAS | ZONA | HORNO / OVEN | PLANO | C-2347 |
|---|---|---|---|---|---|

| ITEM | CODIGO | DENOMINACION | TEXTO | CG9-61 OP | | | | | | | NOTAS |
|---|---|---|---|---|---|---|---|---|---|---|---|
| 1 | U105627000 | DISTANCIA POSTER. CHIMENEA | REAR DISTANCE FLUEPIPE | 1 | | | | | | | |
| | Q412000000 | REMACHE TUBULAR 4 x 8 | TUBULAR RIVET 4 x 8 | 2 | | | | | | | |
| 2 | U105616000 | CHIMENEA PARTE EXTERIOR(HG) | EXTERIOR PART FLUEPIPE (HG) | 1 | | | | | | | |
| 3 | U105617000 | CHIMENEA PARTE INTERIOR(HG) | INTERIOR PART FLUEPIPE (HG) | 1 | | | | | | | |
| | Q412000000 | REMACHE TUBULAR 4 x 8 | TUBULAR RIVET 4 x 8 | 14 | | | | | | | |
| 4 | U105615000 | CAMARA HUMOS HORNO (HG ) | OVEN SMOKE CHAMBER (HG ) | 1 | | | | | | | |
| | Q412000000 | REMACHE TUBULAR 4 x 8 | TUBULAR RIVET 4 x 8 | 17 | | | | | | | |
| 5 | U105605000 | JUNTA PUERTA HORNO INOX | OVEN DOOR SEAL INOX. | 1 | | | | | | | ELIMINADO 03.01.11 |
| 5 | 12039240 | JUNTA HORNO PANORAMICO | PANORAMIC OVEN BOARD | 1 | | | | | | | INTRODUCIDO 03.01.11 |
| 6 | U105611000 | GUIA LATERAL HORNO(HG) | OVEN SIDE GUIDE (HG) | 2 | | | | | | | |
| | Q151336000 | TORNILLO SOPORTE GUIAS | GUIDE SUPPORT BOLT | 4 | | | | | | | |
| | Q222042000 | REMACHE EXAGONAL ROSCA M6 | HEXAGONAL RIVET THREAD M6 | 4 | | | | | | | |
| | Q042043000 | TORNILLO AVELLANADO M6X20 | COUNTERSUNK BOLT M6x20 | 4 | | | | | | | |
| 7 | U105624000 | PARRILLA COMPLETA HG | COMPLETE GRILLE HG | 1 | | | | | | | |
| 8 | U105614000 | SOLERA PEQUEÑA HORNO ( HG ) | SMALL OVEN FLOOR ( HG ) | 1 | | | | | | | |
| 9 | U105613000 | SOLERA HORNO GRANDE G 700 | LARGE OVEN FLOOR G 700 | 1 | | | | | | | |
| 10 | U105620000 | EMBELLECEDOR GUIA BISAGRA | HINGE GUIDE TRIM | 2 | | | | | | | |
| | Q152045000 | TORNILLO AMARRE M6X25 | FASTENING BOLT M6X25 | 4 | | | | | | | |
| 11 | U010512000 | GUIA DE BISAGRA | HINGE GUIDE | 2 | | | | | | | ELIMINADO 12.12.11 |
| 11 | 12041846 | GUIA BISAGRA G700 Y G900 | HINGE GUIDE G700 Y G900 | 2 | | | | | | | INTRODUCIDO 12.12.11 |
| | | | | | | | | | | | |
| | | | | | | | | | | | |
| | | | | | | | | | | | |
| | | | | | | | | | | | |
| | | | | | | | | | | | |
| | | | | | | | | | | | |
| | | | | | | | | | | | |
| | | | | | | | | | | | |
| | | | | | | | | | | | |
| | | | | | | | | | | | |
| | | | | | | | | | | | |

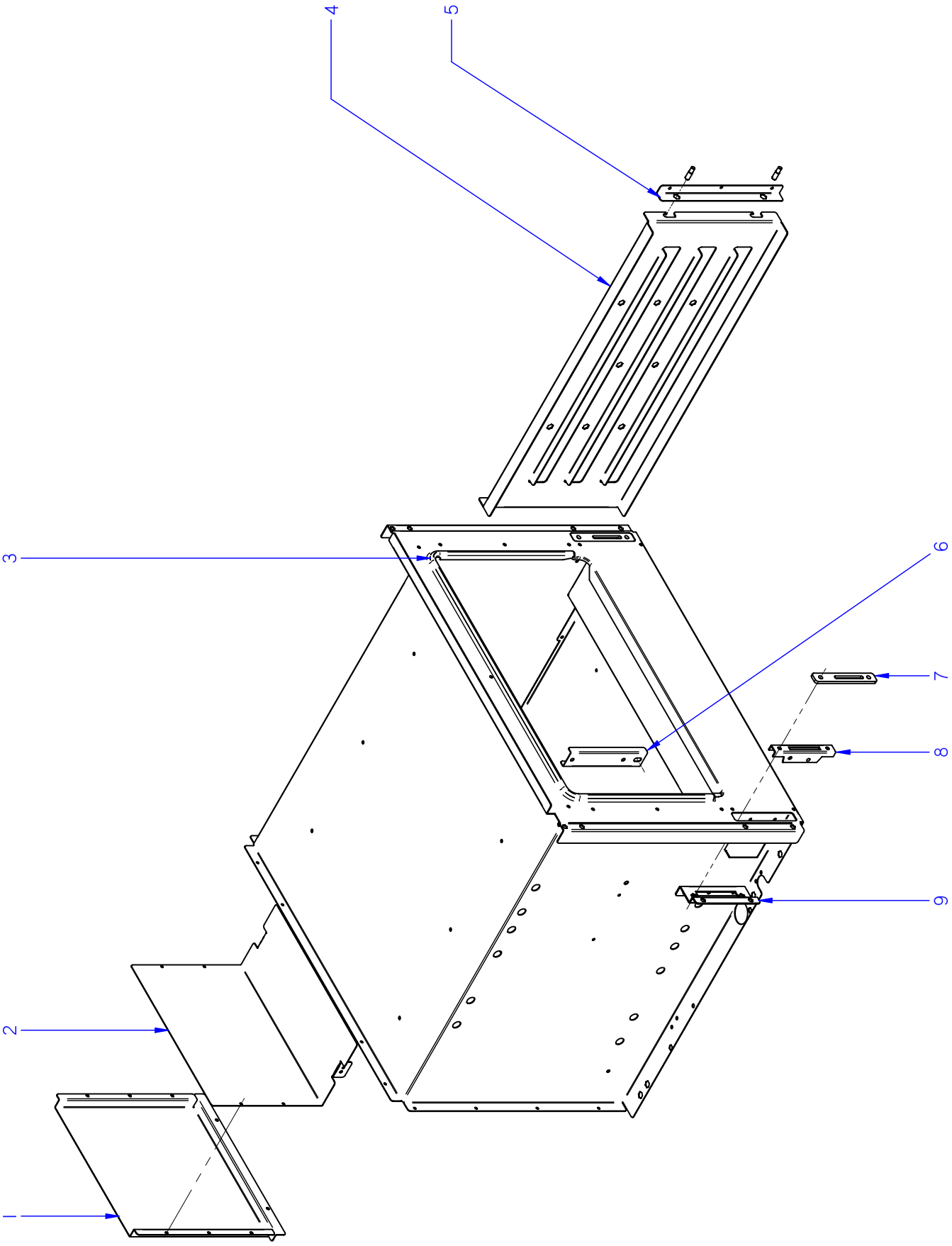


ITEM MARCADO EN COLOR = REPUESTO RECOMENDADO
COLOURED ITEM = RECOMMENDED SPARE PART

| N plano | Firma | Fecha | Aparato | HORNO | Lamina | |
|---|---|---|---|---|---|---|
| C-2348 | | 2009-06 | COCINA CGE9-41 | | 9 | Fagor Industrial S.Coop. Oñate FAGOR |

| MOD. | COCINAS | ZONA | HORNO / OVEN | PLANO | C-2348 |
|---|---|---|---|---|---|

| ITEM | CODIGO | DENOMINACION | TEXTO | CGE9-41 | | | | | | | NOTAS |
|---|---|---|---|---|---|---|---|---|---|---|---|
| 1 | U675614000 | POSTERIOR CHIMENEA CGE9-41 | REAR FLUEPIPE CGE9-41 | 1 | | | | | | | |
| | Q419005000 | REMACHE 4x8 ALMG3 / ALUMINIO | RIVET 4X8 ALMG3 / ALUMINIUM | 16 | | | | | | | |
| 2 | U675615000 | ANTERIOR DE CHIMENEA CGE9-41 | FRONT FLUEPIPE CGE9-41 | 1 | | | | | | | |
| 3 | U025623000 | JUNTA PUERTA HORNO INOX. | OVEN DOOR SEAL INOX. | 1 | | | | | | | ELIMINADO 03.01.11 |
| 3 | U965613000 | JUNTA HORNO FIBRA DE VIDRIO | FURNACE FIBERGLASS BOARD | 1 | | | | | | | INTRODUCIDO 03.01.11 |
| 4 | U915607000 | GUIA LATERAL HORNO G700 | OVEN SIDE GUIDE G700 | 2 | | | | | | | |
| | Q151336000 | TORNILLO SOPORTE GUIAS | GUIDE SUPPORT BOLT | 4 | | | | | | | |
| | Q302022000 | ARANDELA 16X6X1.2 A.304 | WASHER 16X6X1.2 A.304 | 4 | | | | | | | |
| | Q221321000 | REMACHE ROSCAD.NUTSERT.M6 | THREADED RIVET .NUTSERT.M6 | 4 | | | | | | | |
| 5 | U915616000 | SUPLEMENTO AMARRE GUIA LAT. | SIDE GUIDE FAST. SUPPL. | 2 | | | | | | | |
| | Q412000000 | REMACHE TUBULAR 4x8 | TUBULAR RIVET 4x8 | 6 | | | | | | | |
| 6 | U055644000 | FIJACION BULBO | FASTENING BULB | 1 | | | | | | | |
| | Q412000000 | REMACHE TUBULAR 4x8 | TUBULAR RIVET 4x8 | 2 | | | | | | | |
| 7 | U915619000 | EMBELLECED GUIA BISAGRA | HINGE GUIDE TRIM | 2 | | | | | | | |
| | Q152045000 | TORNILLO AMARRE M6X25 | FASTENING BOLT M6X25 | 4 | | | | | | | |
| 8 | U010512000 | GUIA DE BISAGRA | HINGE GUIDE | 2 | | | | | | | ELIMINADO 12.12.11 |
| 8 | 12041846 | GUIA BISAGRA G700 Y G900 | HINGE GUIDE G700 Y G900 | 2 | | | | | | | INTRODUCIDO 12.12.11 |
| 9 | U915604000 | AMARRE GUIA BISAGRA HORNO | OVEN HINGE GUIDE FASTENING | 2 | | | | | | | |
| | Q221342000 | REMACHE EXAGONAL M5 | HEXAGONAL RIVET M5 | 2 | | | | | | | |
| | Q412000000 | REMACHE TUBULAR 4x8 | TUBULAR RIVET 4x8 | 6 | | | | | | | |
| | Q222042000 | REMACHE EXAGONAL ROSCA M6 | HEXAGONAL RIVET THREAD M6 | 4 | | | | | | | |
| | | | | | | | | | | | |
| | | | | | | | | | | | |
| | | | | | | | | | | | |
| | | | | | | | | | | | |
| | | | | | | | | | | | |
| | | | | | | | | | | | |
| | | | | | | | | | | | |
| | | | | | | | | | | | |
| | | | | | | | | | | | |
| | | | | | | | | | | | |

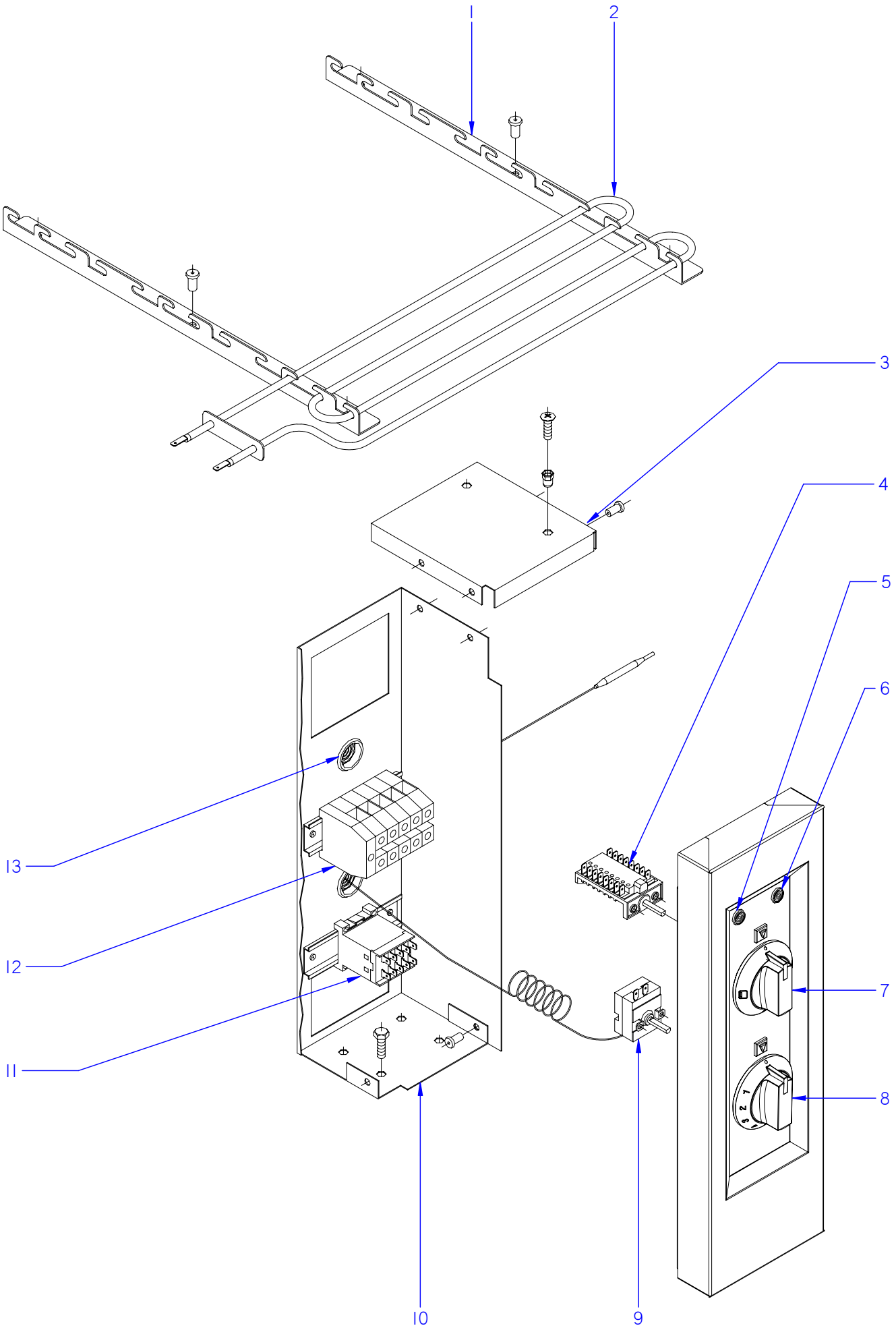


ITEM MARCADO EN COLOR = REPUESTO RECOMENDADO
COLOURED ITEM = RECOMMENDED SPARE PART

| N plano | Firma | Fecha | Aparato | CONJUNTO FUNCIONAL ELECTRICO | Lamina | |
|---|---|---|---|---|---|---|
| C-2349 | | 2009-06 | COCINA CGE9-41 | | 10 | Fagor Industrial S.Coop. FAGOR Onate |

| MOD. | COCINAS | ZONA | CONJUNTO FUNCIONAL ELECTRICO | PLANO | C-2349 |
|---|---|---|---|---|---|

| ITEM | CODIGO | DENOMINACION | TEXTO | CGE9-41 | | | | | | | NOTAS |
|---|---|---|---|---|---|---|---|---|---|---|---|
| 1 | U805613000 | ESCUADRA SOPOR. RESISTENCIAS | SUPP. BRACKET RESISTORS | 4 | | | | | | | |
| | Q419005000 | REMACHE 4x8 ALMG3 / ALUMINIO | RIVET 4X8 ALMG3 / ALUMINIUM | 12 | | | | | | | |
| 2 | U803004000 | RESISTENCIA 1000W/230V | RESISTOR 1000W -230V | 6 | | | | | | | |
| 3 | U673051000 | TAPA DE CUADRO ELECTRICO | ELECTRIC PANEL COVER | 1 | | | | | | | |
| | Q419005000 | REMACHE 4x8 ALMG3 / ALUMINIO | RIVET 4X8 ALMG3 / ALUMINIUM | 4 | | | | | | | |
| | Q419005000 | REMACHE 4x8 ALMG3 / ALUMINIO | RIVET 4X8 ALMG3 / ALUMINIUM | 2 | | | | | | | |
| | Q221342000 | REMACHE EXAGONAL M5 | HEXAGONAL RIVET M5 | 2 | | | | | | | |
| | Q012032000 | TORNILLO EXAGONAL M5x15 A304 | HEXAGONAL BOLT M5x15 | 2 | | | | | | | |
| | Q012032000 | TORNILLO EXAGONAL M5x15 A304 | HEXAGONAL BOLT M5x15 | 2 | | | | | | | |
| 4 | U673006000 | CONMUTADOR | SWITCH | 1 | | | | | | | |
| | Q151320000 | TORNILLO ALOMADO M4x6 H.ZINC. | CURVED SCREW M4X6 H. ZINC | 2 | | | | | | | |
| 5 | R693055000 | PILOTO VERDE 41227000C7 | GREEN PILOT 41227000C7 | 1 | | | | | | | ELIMINADO 01.02.13 |
| 5 | 12047390 | PILOTO VERDE 230V AC 8KW 16MM | GREEN PILOT 230V AC 8KW 16MI | 1 | | | | | | | INTRODUCIDO 01.02.13 |
| 6 | R693056000 | PILOTO AMBAR | AMBER PILOT | 1 | | | | | | | ELIMINADO 01.02.13 |
| 6 | 12024669 | PILOTO AMBAR Ø18 | AMBER PILOT Ø18 | 1 | | | | | | | INTRODUCIDO 01.02.13 |
| 7 | U173006000 | MANDO MONTADO CE Ø6 | CONTROL CE Ø6 | 1 | | | | | | | |
| 8 | U173005000 | MANDO CE Ø6 TERMOSTATO | CONTROL Ø6 THERMOSTAT | 1 | | | | | | | |
| 9 | X153000000 | TERMOSTATO 50-310º C | THERMOSTAT 50-310 C | 1 | | | | | | | |
| | Q151320000 | TORNILLO ALOMADO M4x6 H.ZINC. | CURVED SCREW M4X6 H. ZINC | 2 | | | | | | | |
| 10 | U673050000 | CUADRO ELECTRICO | ELECTRICAL PANEL | 1 | | | | | | | |
| 11 | Z213007000 | CONTACTOR 3TF2010-3AL2 | CONTACTOR 3TF2010-3AL2 | 1 | | | | | | | |
| | R663055000 | GUIA CONTACTOR L-120 | CONTACTOR GUIDE L-120 | 1 | | | | | | | |
| | Q419005000 | REMACHE 4x8 ALMG3 / ALUMINIO | RIVET 4X8 ALMG3 / ALUMINIUM | 4 | | | | | | | |
| 12 | P453025000 | BORNES 10 WDU-10203.0 | TERMINALS 10 WDU-10203.0 | 3 | | | | | | | |
| | U803009000 | BORNA PASO AZUL 16 MM. | BLUE TAP TERMINAL 16MM | 1 | | | | | | | |
| | Z263302000 | BORNA NEUTRO AZUL 57A 10mm | BLUE NEUTRAL TERMINAL 57A | 1 | | | | | | | INTRODUCIDO 21.10.11 |
| | P453026000 | BORNA TIERRA 10 WPE-10103.0 | TERMINAL TIER 10 WPE-10103.O | 1 | | | | | | | |
| | Z263303000 | TOPE FINAL | END STOP | 1 | | | | | | | |
| | R663055000 | GUIA CONTACTOR L-120 | CONTACTOR GUIDE L-120 | 1 | | | | | | | |
| 13 | X723014000 | PASAMUROS AMETRO 30 | | 2 | | | | | | | |
| | | | | | | | | | | | |

| MOD. | COCINAS | ZONA | VARIOS / MISCELLANEOUS | PLANO | |
|---|---|---|---|---|---|

| ITEM | CODIGO | DENOMINACION | TEXTO | CG9-20 | CG9-40 | CG9-60 | CG9-41 | CG9-61 | CG9-82 | CG9-61 OP | CGE9-41 | NOTAS |
|---|---|---|---|---|---|---|---|---|---|---|---|---|
| | U026508000 | FOLLETO DE INSTRUCIONES CG | INSTRUCTION LEAFLET CG | 1 | 1 | 1 | 1 | 1 | 1 | 1 | 1 | |
| | U333003000 | CABLE MASA ENCENDEDOR | LIGHTER EARTH CABLE | _ | _ | _ | _ | 1 | 1 | 1 | 1 | |
| | U323030000 | CABLE BUJIA | SPARK PLUG CABLE | _ | _ | _ | 1 | 1 | 1 | 1 | 1 | |
| | | | | | | | | | | | | |
| | | | | | | | | | | | | |
| | U673054000 | ESQUEMA TEORICO ADHESIVO | THEOR. DIAGRAM LABEL | _ | _ | _ | _ | _ | _ | _ | 1 | PLANO HC-76539 |
| | U673008000 | CABLEADO HORNO | OVEN WIRING | _ | _ | _ | _ | _ | _ | _ | 1 | |

| MOD. | COCINAS | ZONA | PIEZAS ESPECIFICAS PARA LA VERSION AUSTRALIA | PLANO | |
|---|---|---|---|---|---|

| ITEM | CODIGO | DENOMINACION | TEXTO | CG9-20 A | CG9-40 A | CG9-60 A | CG9-41 A | CG9-61 A | CG9-82 A | | NOTAS |
|---|---|---|---|---|---|---|---|---|---|---|---|
| | | **PIEZAS A ELIMINAR** | **PARTS TO BE REMOVED** | | | | | | | | |
| 2 | U112402000 | TOBERA Ø 2,10 GN (8000) | NOZZLE Ø 2,10 GN (8000) | 1 | 1 | 2 | 1 | 2 | 2 | | PLANO C-2342 / 43 |
| 8 | U112401000 | TOBERA Ø 1,55 BP (10500) | NOZZLE Ø 1.55 BP (10500) | _ | 1 | 1 | 1 | 1 | 2 | | PLANO C-2342 / 43 |
| 8 | 631600000 | TOBERA Ø 2,40 GN (10500) | NOZZLE Ø 2.40 GN (10500) | _ | 1 | 1 | 1 | 1 | 2 | | PLANO C-2342 / 43 |
| 9 | U235706000 | VENTURI 10.500 | VENTURI 10,500 | _ | 1 | 1 | 1 | 1 | 2 | | PLANO C-2342 / 43 |
| 10 | U025706000 | REGULADOR DE AIRE 10.000 | AIR CONTROL 10.000 | _ | 1 | 1 | 1 | 1 | 2 | | PLANO C-2342 / 43 |
| 12 | U235701500 | DIFUSOR 10.500 Kcal/H | DIFFUSER 10.500 Kcal/H | _ | 1 | 1 | 1 | 1 | 2 | | ELIMINA. 22.10.12 C-2342 / 43 |
| 12 | 12047137 | DIFUSOR 10.500 (AGUJ Y PINTA) | DIFFUSER 10.500 | _ | 1 | 1 | 1 | 1 | 2 | | INTROD. 22.10.12 C-2342 / 43 |
| 14 | U025712000 | PROTEC. PILOTO QUEMAD. 4000 | BURNER PILOT GUARD 4000 | 1 | 2 | 3 | 2 | 3 | 4 | | PLANO C-2342 / 43 |
| 15 | U445731500 | QUEMADOR 4000 (00545-010) | BURNER 4000 (00545-010) | 1 | 2 | 3 | 2 | 3 | 4 | | PLANO C-2342 / 43 |
| 16 | U025709000 | CUERPO QUEMADOR 4000Kcal/H | BURNER BODY 4000 Kcal/H | 1 | 2 | 3 | 2 | 3 | 4 | | PLANO C-2342 / 43 |
| 18 | U125720000 | VENTURI QUEMADOR 4000 kcl | VENTURI BURNER 4000 kcl | 1 | 2 | 3 | 2 | 3 | 4 | | PLANO C-2342 / 43 |
| 19 | X312400000 | TOBERA Ø 1,10 BP (4000) | NOZZLE Ø 1.10 BP (4000) | 1 | 2 | 3 | 2 | 3 | 4 | | PLANO C-2342 / 43 |
| 19 | R302400000 | TOBERA Ø 1,65 GN (4000) | NOZZLE Ø 1.65 GN (4000) | 1 | 2 | 3 | 2 | 3 | 4 | | PLANO C-2342 / 43 |
| S/Nº | U022620000 | POSICIONADOR PORTATOB. G900 | NOZZLE-HOLDER POSITION. G9( | _ | 1 | 1 | 1 | 1 | 2 | | PLANO C-2344 |
| 10 | U912115000 | GRIFO 18700 BY-PASS 0,75 | TAP 18700 BY-PASS 0.75 | 1 | 2 | 3 | 2 | 3 | 4 | | PLANO C-2344 |
| 10 | U912117000 | GRIFO 18700 BY-PASS 1,45 | TAP 18700 BY-PASS 1.45 | _ | 1 | 1 | 1 | 1 | 2 | | PLANO C-2344 |
| | | | | | | | | | | | |
| | | | | | | | | | | | |
| | | **PIEZAS A INTRODUCIR** | **PARTS TO BE INCLUDED** | | | | | | | | |
| 2 | 631000000 | TOBERA Ø 1,40 BP (8000) | NOZZLE Ø 1.40 BP (8000) | 1 | 3 | 4 | 3 | 4 | 6 | | PLANO C-2342 / 43 |
| 2 | U054400000 | TOBERA Ø 2,50 GN (8000) | NOZZLE Ø 2,50 GN (8000) | 1 | 4 | 6 | 4 | 6 | 8 | | PLANO C-2342 / 43 |
| 3 | U565700000 | VENTURI QUEMADOR 8000 | VENTURI BURNER 8000 | 1 | 3 | 4 | 3 | 4 | 6 | | PLANO C-2342 / 43 |
| 4 | U265702000 | REGULADOR AIRE | AIR CONTROLLER | _ | 1 | 1 | 1 | 1 | 2 | | PLANO C-2342 / 43 |
| 5 | U025710000 | CUERPO QUEMADOR 8000 Kcal/H | BURNER BODY 8000 Kcal/h | 1 | 3 | 4 | 3 | 4 | 6 | | PLANO C-2342 / 43 |
| 6 | U915703000 | PROTEC. PILOTO QUEMAD. 7000 | BURNER PILOT GUARD 7000 | _ | 2 | 3 | 2 | 3 | 4 | | PLANO C-2342 / 43 |
| 7 | U135702500 | QUEMADOR 8000 | BURNER 8000 | 1 | 3 | 4 | 3 | 4 | 6 | | PLANO C-2342 / 43 |
| 4 | U022619000 | POSICIONADOR PORTATOB. 4000 | NOZZLE-HOLDER POSITION. 400 | _ | 1 | 1 | 1 | 1 | 2 | | PLANO C-2344 |
| 10 | U912109000 | GRIFO 18700 BY-PASS 1,15 | TAP 18700 BY-PASS 1.15 | 1 | 3 | 4 | 3 | 4 | 6 | | PLANO C-2344 |
| | | | | | | | | | | | |
| | | | | | | | | | | | |

| MOD. | COCINAS | ZONA | PIEZAS ESPECIFICAS PARA LA VERSION ITALIA | PLANO | |
|---|---|---|---|---|---|

| ITEM | CODIGO | DENOMINACION | TEXTO | CG9-40 I | CG9-60 I | CG9-41 I | CG9-61 I | CG9-82 I | | | NOTAS |
|---|---|---|---|---|---|---|---|---|---|---|---|
| | | **PIEZAS A ELIMINAR** | **PARTS TO BE REMOVED** | | | | | | | | |
| 6 | U915703000 | PROTEC. PILOTO QUEMAD. 7000 | BURNER PILOT GUARD 7000 | 1 | 1 | 1 | 1 | 2 | | | PLANO C-2342 / 43 |
| 8 | U112401000 | TOBERA Ø 1,55 BP (10500) | NOZZLE Ø 1.55 BP (10500) | 1 | 1 | 1 | 1 | 2 | | | PLANO C-2342 / 43 |
| 8 | 631600000 | TOBERA Ø 2,40 GN (10500) | NOZZLE Ø 2.40 GN (10500) | 1 | 1 | 1 | 1 | 2 | | | PLANO C-2342 / 43 |
| 9 | U235706000 | VENTURI 10.500 | VENTURI 10,500 | 1 | 1 | 1 | 1 | 2 | | | PLANO C-2342 / 43 |
| 10 | U025706000 | REGULADOR DE AIRE 10.000 | AIR CONTROL 10.000 | 1 | 1 | 1 | 1 | 2 | | | PLANO C-2342 / 43 |
| 11 | U025711000 | CUERPO QUEMADOR 10.000Kcal/H | BURNER BODY 10,000 Kcal/H | 1 | 1 | 1 | 1 | 2 | | | PLANO C-2342 / 43 |
| 12 | U235701500 | DIFUSOR 10.500 Kcal/H | DIFFUSER 10.500 Kcal/H | 1 | 1 | 1 | 1 | 2 | | | ELIMINA. 22.10.12 C-2342 / 43 |
| 12 | 12047137 | DIFUSOR 10.500 (AGUJ Y PINTA) | DIFFUSER 10.500 | 1 | 1 | 1 | 1 | 2 | | | INTROD. 22.10.12 C-2342 / 43 |
| S/Nº | U022620000 | POSICIONADOR PORTATOB. G900 | NOZZLE-HOLDER POSITION. G9( | 1 | 1 | 1 | 1 | 2 | | | PLANO C-2344 |
| 10 | U912117000 | GRIFO 18700 BY-PASS 1,45 | TAP 18700 BY-PASS 1.45 | 1 | 1 | 1 | 1 | 2 | | | PLANO C-2344 |
| | | | | | | | | | | | |
| | | | | | | | | | | | |
| | | | | | | | | | | | |
| | | | | | | | | | | | |
| | | **PIEZAS A INTRODUCIR** | **PARTS TO BE INCLUDED** | | | | | | | | |
| 14 | U025712000 | PROTEC. PILOTO QUEMAD. 4000 | BURNER PILOT GUARD 4000 | _ | 1 | _ | 1 | _ | | | PLANO C-2342 / 43 |
| 15 | U445731500 | QUEMADOR 4000 (00545-010) | BURNER 4000 (00545-010) | 1 | 1 | 1 | 1 | 2 | | | PLANO C-2342 / 43 |
| 16 | U025709000 | CUERPO QUEMADOR 4000Kcal/H | BURNER BODY 4000 Kcal/H | 1 | 1 | 1 | 1 | 2 | | | PLANO C-2342 / 43 |
| 18 | U125720000 | VENTURI QUEMADOR 4000 kcl | VENTURI BURNER 4000 kcl | 1 | 1 | 1 | 1 | 2 | | | PLANO C-2342 / 43 |
| 19 | X312400000 | TOBERA Ø 1,10 BP (4000) | NOZZLE Ø 1.10 BP (4000) | 1 | 1 | 1 | 1 | 2 | | | PLANO C-2342 / 43 |
| 19 | R302400000 | TOBERA Ø 1,65 GN (4000) | NOZZLE Ø 1.65 GN (4000) | 1 | 1 | 1 | 1 | 2 | | | PLANO C-2342 / 43 |
| 4 | U022619000 | POSICIONADOR PORTATOB. 4000 | NOZZLE-HOLDER POSITION. 400 | 1 | 1 | 1 | 1 | 2 | | | PLANO C-2344 |
| 10 | U912115000 | GRIFO 18700 BY-PASS 0,75 | TAP 18700 BY-PASS 0.75 | 1 | 1 | 1 | 1 | 2 | | | PLANO C-2344 |
| | | | | | | | | | | | |
| | | | | | | | | | | | |
| | | | | | | | | | | | |
| | | | | | | | | | | | |
| | | | | | | | | | | | |
| | | | | | | | | | | | |
| | | | | | | | | | | | |

| MOD. | COCINAS | ZONA | REPUESTOS RECOMENDADOS<br>RECOMMENDED SPARE PART | PLANO | |
|---|---|---|---|---|---|

| ITEM | CODIGO | DENOMINACION | TEXTO | CG9-20 | CG9-40 | CG9-60 | CG9-41 | CG9-61 | CG9-82 | CG9-61 OP | CGE9-41 | NOTAS |
|---|---|---|---|---|---|---|---|---|---|---|---|---|
| 17 | U020528000 | BISAGRA CIERRE HORNO | OVEN LOCK HINGE | _ | _ | _ | 2 | 2 | 2 | 2 | 2 | C-2341 |
| 5 | 12005260 | PILOTO COMPL. COCINAS 1 LLAM | 1 FLAME COMPLETE PILOT | 2 | 4 | 6 | _ | _ | _ | _ | 4 | C-2344 |
| S/Nº | X012126000 | CUERPO SIN RAC. 901.210 B-P | BODY WITHOUT CONNEC. 901.2 | 2 | 4 | 6 | _ | _ | _ | _ | 4 | C-2344 |
| S/Nº | U442136000 | CUERPO SIN RACORD G-N | BODY WITHOUT CONNEC. 901.2 | 2 | 4 | 6 | _ | _ | _ | _ | 4 | C-2344 |
| S/Nº | U442137000 | INYECTOR Ø 0,4 G-N | INJECTOR Ø 0.4 GN. | 2 | 4 | 6 | _ | _ | _ | _ | 4 | C-2344 |
| S/Nº | U912107000 | CABEZA PILOTO 1 LLAMA (G 700 | PILOT HEAD 1 FLAME (G 700) | 2 | 4 | 6 | _ | _ | _ | _ | 4 | C-2344 |
| S/Nº | U442130000 | AMARRE TRASERO PI 978.009 | REAR FASTEN. PI 978.009 | 2 | 4 | 6 | _ | _ | _ | _ | 4 | C-2344 |
| S/Nº | X012116000 | TORNILLO AMA. 953.007 | FAST. BOLT 953.007 | 2 | 4 | 6 | _ | _ | _ | _ | 4 | C-2344 |
| S/Nº | X012122000 | REGULADOR AIRE 912.001 | AIR CONTROL 912.001 | 2 | 4 | 6 | _ | _ | _ | _ | 4 | C-2344 |
| S/Nº | U442131000 | AMARRE DELANTERO PI 978.021 | FRONT FASTENING PI 978.021 | 2 | 4 | 6 | _ | _ | _ | _ | 4 | C-2344 |
| 6 | U222130000 | TERMOPAR L=600 | THERMOCOUPLE L=600 | 1 | 2 | 3 | _ | _ | _ | _ | 2 | C-2344 |
| S/Nº | U262130000 | TERMOPAR L=1000 | THERMOCOUPLE L=1000 | 1 | 2 | 3 | _ | _ | _ | _ | 2 | C-2344 |
| 10 | U912115000 | GRIFO 18700 BY-PASS 0,75 | TAP 18700 BY-PASS 0.75 | 1 | 2 | 3 | _ | _ | _ | _ | 2 | C-2344 |
| 10 | U912109000 | GRIFO 18700 BY-PASS 1,15 | TAP 18700 BY-PASS 1.15 | 1 | 1 | 2 | _ | _ | _ | _ | 1 | C-2344 |
| 10 | U912117000 | GRIFO 18700 BY-PASS 1,45 | TAP 18700 BY-PASS 1.45 | _ | 1 | 1 | _ | _ | _ | _ | 1 | C-2344 |
| 5 | 12005260 | PILOTO COMPL. COCINAS 1 LLAM | 1 FLAME COMPLETE PILOT | _ | _ | _ | 4 | 6 | 8 | 6 | _ | C-2345 |
| S/Nº | X012126000 | CUERPO SIN RAC. 901.210 | BODY WITHOUT CONNEC. 901.2 | _ | _ | _ | 4 | 6 | 8 | 6 | _ | C-2345 |
| S/Nº | U442137000 | INYECTOR Ø 0,4 GN | INJECTOR Ø 0.4 GN. | _ | _ | _ | 4 | 6 | 8 | 6 | _ | C-2345 |
| S/Nº | U912107000 | CABEZA PILOTO 1 LLAMA (G 700 | PILOT HEAD 1 FLAME (G 700) | _ | _ | _ | 4 | 6 | 8 | 6 | _ | C-2345 |
| S/Nº | U442130000 | AMARRE TRASERO PI 978.009 | REAR FASTEN. PI 978.009 | _ | _ | _ | 4 | 6 | 8 | 6 | _ | C-2345 |
| S/Nº | X012116000 | TORNILLO AMA. 953.007 | FAST. BOLT 953.007 | _ | _ | _ | 4 | 6 | 8 | 6 | _ | C-2345 |
| S/Nº | X012122000 | REGULADOR AIRE 912.001 | AIR CONTROL 912.001 | _ | _ | _ | 4 | 6 | 8 | 6 | _ | C-2345 |
| S/Nº | U442131000 | AMARRE DELANTERO PI 978.021 | FRONT FASTENING PI 978.021 | _ | _ | _ | 4 | 6 | 8 | 6 | _ | C-2345 |
| 6 | U222130000 | TERMOPAR L=600 | THERMOCOUPLE L=600 | _ | _ | _ | 2 | 3 | 4 | 3 | _ | C-2345 |
| S/Nº | U262130000 | TERMOPAR L=1000 | THERMOCOUPLE L=1000 | _ | _ | _ | 2 | 3 | 4 | 3 | _ | C-2345 |
| 10 | U912115000 | GRIFO 18700 BY-PASS 0,75 | TAP 18700 BY-PASS 0.75 | _ | _ | _ | 2 | 3 | 4 | 3 | _ | C-2345 |
| 10 | U912109000 | GRIFO 18700 BY-PASS 1,15 | TAP 18700 BY-PASS 1.15 | _ | _ | _ | 1 | 2 | 2 | 2 | _ | C-2345 |
| 10 | U912117000 | GRIFO 18700 BY-PASS 1,45 | TAP 18700 BY-PASS 1.45 | _ | _ | _ | 1 | 1 | 2 | 1 | _ | C-2345 |
| 14 | 12043897 | PIEZOELECTRICO COMPLETO | COMPLETE PIEZOELECTRIC | _ | _ | _ | 1 | 1 | 2 | 1 | _ | C-2345 |
| S/Nº | 12043907 | ANILLO ADAPTADOR | ADAPTER RING | _ | _ | _ | 1 | 1 | 2 | 1 | _ | C-2345 |
| | | | | | | | | | | | | |

| MOD. | COCINAS | ZONA | REPUESTOS RECOMENDADOS<br>RECOMMENDED SPARE PART | PLANO | |
|---|---|---|---|---|---|

| ITEM | CODIGO | DENOMINACION | TEXTO | CG9-20 | CG9-40 | CG9-60 | CG9-41 | CG9-61 | CG9-82 | CG9-61 OP | CGE9-41 | NOTAS |
|---|---|---|---|---|---|---|---|---|---|---|---|---|
| 15 | U322118000 | PILOTO COMPLETO 100.062 | COMPLETE PILOT LIGHT 100,062 | _ | _ | _ | 1 | 1 | 2 | 1 | _ | C-2345 |
| S/Nº | U442137000 | INYECTOR Ø 0,4 GN | INJECTOR Ø 0.4 GN. | _ | _ | _ | 1 | 1 | 2 | 1 | _ | C-2345 |
| S/Nº | U562130000 | TERMOPAR L=850 | THERMOCOUPLE L=850 | _ | _ | _ | 1 | 1 | 2 | 1 | _ | C-2345 |
| | Q012031000 | TORNILLO EXAGONAL M5x15 A304 | HEXAGONAL BOLT M5x15 A304 | _ | _ | _ | 2 | 2 | 4 | 2 | _ | C-2345 |
| 16 | U134324000 | VALVULA MINISIT 0710.654 | VALVE MINISIT 0710.654 | _ | _ | _ | 1 | 1 | 2 | 1 | _ | C-2345 |
| S/Nº | Q307041000 | JUNTA TORICA 25,4x20,2x2,6 | O-RING 25.4x20.2x2.6 | _ | _ | _ | 2 | 2 | 4 | 2 | _ | C-2345 |
| S/Nº | U134317000 | MANDO NEGRO MINI 916.124 | BLACK CTRL. MINI 916.124 | _ | _ | _ | 1 | 1 | 2 | 1 | _ | C-2345 |
| S/Nº | U134318000 | CUBIERTA MINISIT 903.052 | COVER MINISIT 903.052 | _ | _ | _ | 1 | 1 | 2 | 1 | _ | C-2345 |
| S/Nº | Q031322000 | TORNILLO ALOMADO M4x15 | CURVED SCREW M4X15 | _ | _ | _ | 8 | 8 | 16 | 8 | _ | C-2345 |
| S/Nº | U264300000 | RACOR 3/8 906,252 | CONNECTION 3/8 906.252 | _ | _ | _ | 2 | 2 | 4 | 2 | _ | C-2345 |
| S/Nº | U134323000 | RACORD BICONO 6 958.031 | BICONE CONNECTION 6 958.031 | _ | _ | _ | 1 | 1 | 2 | 1 | _ | C-2345 |
| 4 | U965613000 | JUNTA HORNO FIBRA DE VIDRIO | FURNACE FIBERGLASS BOARD | _ | _ | _ | 1 | 1 | 2 | _ | _ | C-2346 |
| 10 | 12041846 | GUIA BISAGRA G700 Y G900 | HINGE GUIDE G700 Y G900 | _ | _ | _ | 2 | 2 | 4 | _ | _ | C-2346 |
| 5 | U105605000 | JUNTA PUERTA HG (INOX) | HG DOOR SEAL INOX. | _ | _ | _ | _ | _ | _ | 1 | _ | C-2347 |
| 11 | 12041846 | GUIA BISAGRA G700 Y G900 | HINGE GUIDE G700 Y G900 | _ | _ | _ | _ | _ | _ | 2 | _ | C-2347 |
| 3 | U965613000 | JUNTA HORNO FIBRA DE VIDRIO | FURNACE FIBERGLASS BOARD | _ | _ | _ | _ | _ | _ | _ | 1 | C-2348 |
| 8 | 12041846 | GUIA BISAGRA G700 Y G900 | HINGE GUIDE G700 Y G900 | _ | _ | _ | _ | _ | _ | _ | 2 | C-2348 |
| 2 | U803004000 | RESISTENCIA 1000W/230V | RESISTOR 1000W -230V | _ | _ | _ | _ | _ | _ | _ | 6 | C-2349 |
| 4 | U673006000 | CONMUTADOR | SWITCH | _ | _ | _ | _ | _ | _ | _ | 1 | C-2349 |
| 5 | 12047390 | PILOTO VERDE 230V AC 8KW 16MM | GREEN PILOT 230V AC 8KW 16M | _ | _ | _ | _ | _ | _ | _ | 1 | C-2349 |
| 6 | 12024669 | PILOTO AMBAR Ø18 | AMBER PILOT Ø18 | _ | _ | _ | _ | _ | _ | _ | 1 | C-2349 |
| | | | | | | | | | | | | |
| | | | | | | | | | | | | |
| | | | | | | | | | | | | |
| | | | | | | | | | | | | |
| | | | | | | | | | | | | |
| | | | | | | | | | | | | |
| | | | | | | | | | | | | |
| | | | | | | | | | | | | |
| | | | | | | | | | | | | |
| | | | | | | | | | | | | |

# HE9-10

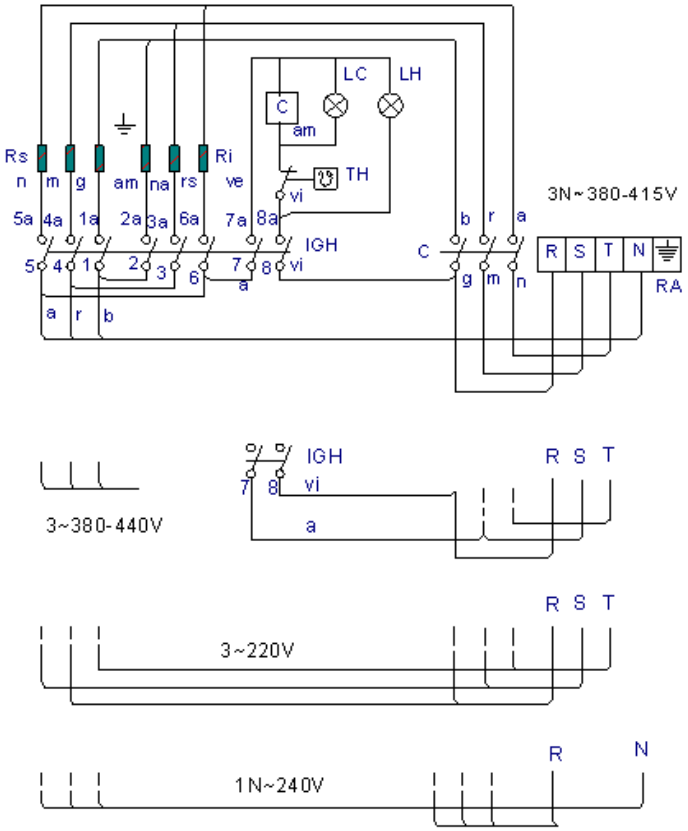


RA: Regleta de Alimentacion

IGH :Conmutador General Horno

C: Contactor

LC : Lampara Calentamiento Horno

LH: Lampara Horno Encendido

TH : Termostato de Horno

Rs : Resistencia Horno Superior

Ri : Resistencia Horno Inferior

r = rojo-red-rouge
m = marron-brown-marron
g = gris-grey-gris
n = negro-black-noir
a = azul-blue-bleu
b = blanco-white-blanc
vi = violeta-violette-violet
am = amarillo-yellow-jaune
na = naranja-orange-orange
rs = rosa-rose-pink
ve = verde-green-vert
am/ve = amarillo/verde-yellow/green-jaune/vert

| | 1 _ 2 1a 2a | 3 _ 4 3a 4a | 5 _ 6 5a 6a | 7 7a | 8 8a |
|---|---|---|---|---|---|
| 0 | | | | | |
| 1 | X | X | X | X | X |
| 2 | X | X | X | X | X |
| 3 | | X | X | X | X |

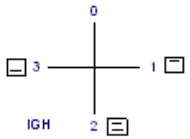


**U673054**

| | | | | | | |
|---|---|---|---|---|---|---|
| | Esquema teorico adhesivo | | | U-673054000 | | |
| N° | Pieza | Cant. | Material | N° Clasificacion | Acabado | |
| N° | Modificacion | | Propuesta de | Fecha | Tolerancias generales | |
| | | | | | <5± | 50–100± : |
| | | | | | 5–25± : | >100± |
| | | | | | 25–50± : | OX± |

| | Firma | Fecha |
|---|---|---|
| Dibujado | M.Arrillo | 01-11-2002 |
| Proyectado | | |
| Comprobado | | |

FAGOR

Fagor Industrial,Koop.Elk., Mugarra

Escala: 1/1

Mecanizado superficial

COCINAS HE9-10

Plano numero: HC-76539

Sustituye al N°

Sustituido por

Planos bajo dalle reales y verificados por ingeniería