FAGOR

SPARE PARTS CATALOGUE
ERSATZTEILKATALOG
CATALOGUE PIECES DETACHEES
CATALOGO PARTI RICAMBIO
CATALOGO DE PIEZAS DE RECAMBIO
CATALOGO PECAS DE REPOSICAO

LU60B

14-02-2018

Tav.1: Carrozzeria
Tav.2: Impianto elettrico
Tav.3: Componenti in vasca
Tav.4: Circuito di lavaggio
Tav.5: Circuito di risciacquo
Tav.6: Lance di lavaggio
Tav.7: Pompa di lavaggio
Tav.8: Pompa di scarico

Tab.1: Carrocería
Tab.2: Instalación eléctrica
Tab.3: Componentes en cuba
Tab.4: Circuito de lavado
Tab.5: Circuito d'enjuague
Tab.6: Brazos de lavado
Tab.7: Bomba de lavado
Tab.8: Bomba de descarga

Taf.1: Verkleidung
Taf.2: Elektrische Anlage
Taf.3: Bauteile im Waschtank
Taf.4: Spuelschaltung
Taf.5: Nachspuelschaltung
Taf.6: Wascharme
Taf.7: Spuelpumpe
Taf.8: Laugenpumpe

Tav.1: Machine body
Tav.2: Electrical components
Tav.3: Components in the tank
Tav.4: Washing circuit
Tav.5: Rinsing circuit
Tav.6: Washing arms
Tav.7: Washing pump
Tav.8: Draining pump

Tab.1: Carrosserie
Tab.2: Installation électrique
Tab.3: Composants de cuve
Tab.4: Circuit de lavage
Tab.5: Circuit de rinçage
Tab.6: Bras de lavage
Tab.7: Pompe de lavage
Tab.8: Pompe de vidange

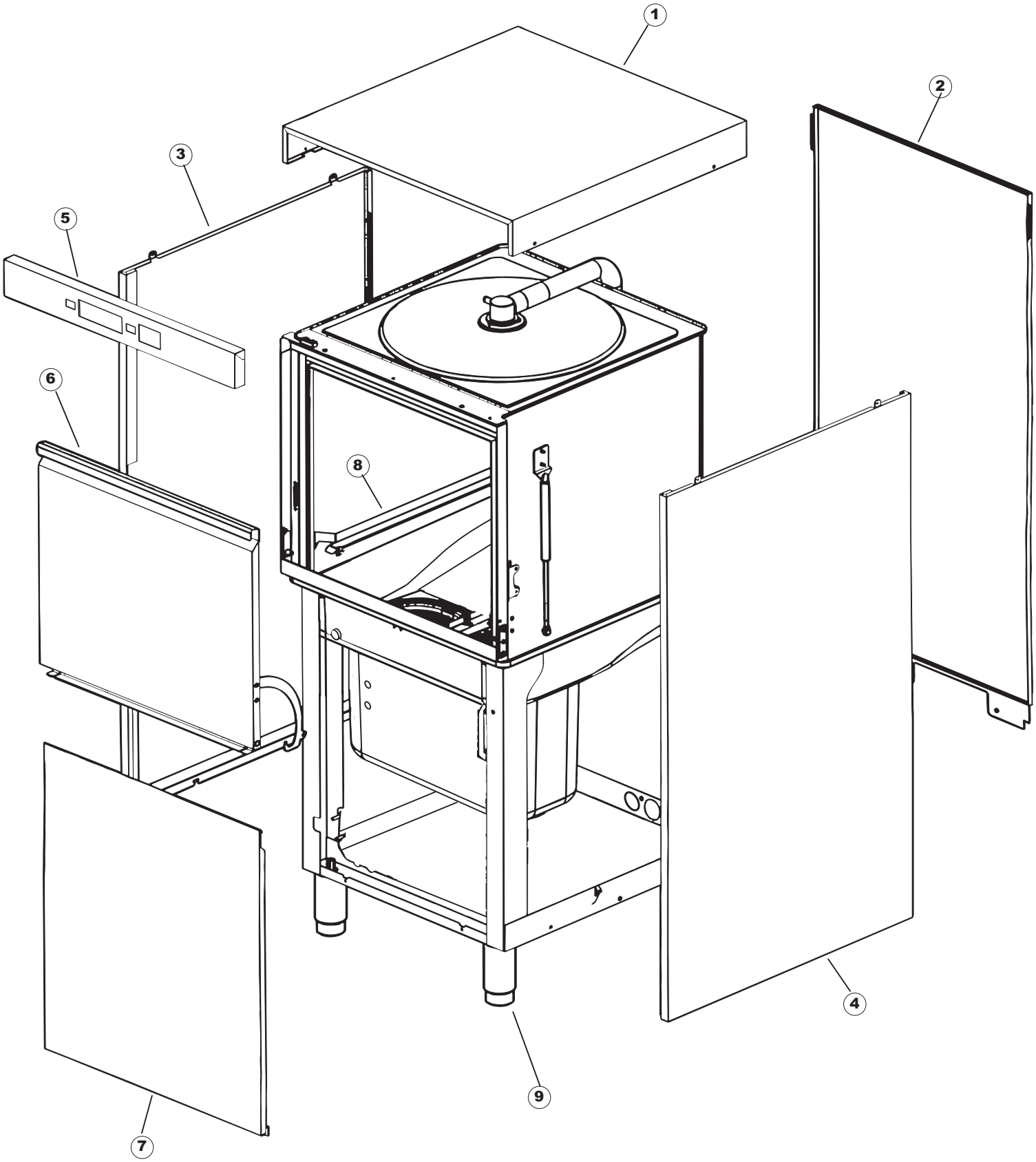
1
2
3
5
6
8
4
9
7

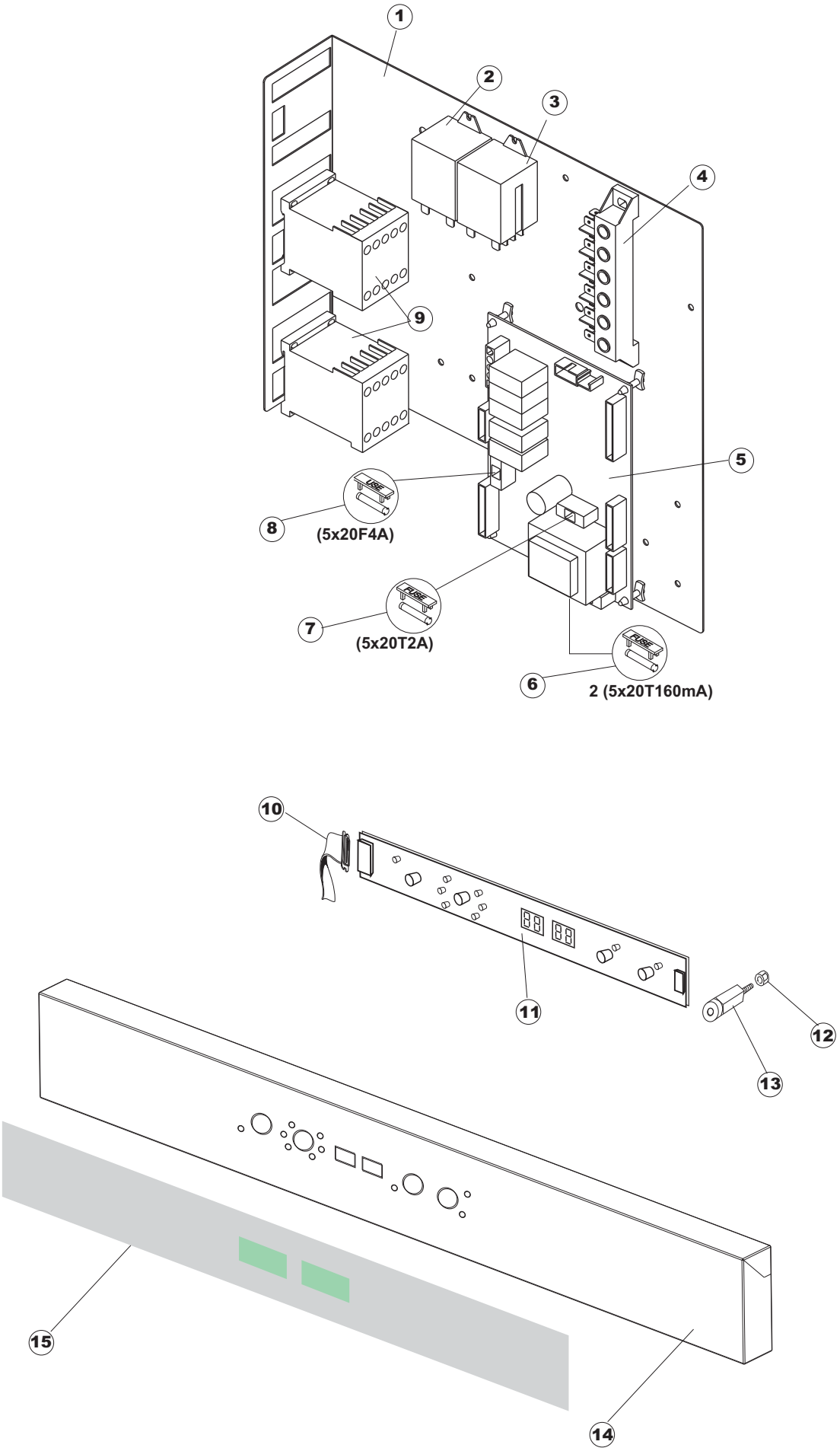
1
2
3
4
9
5
8
(5x20F4A)
7
(5x20T2A)
6
2 (5x20T160mA)
10
11
12
13
15
14

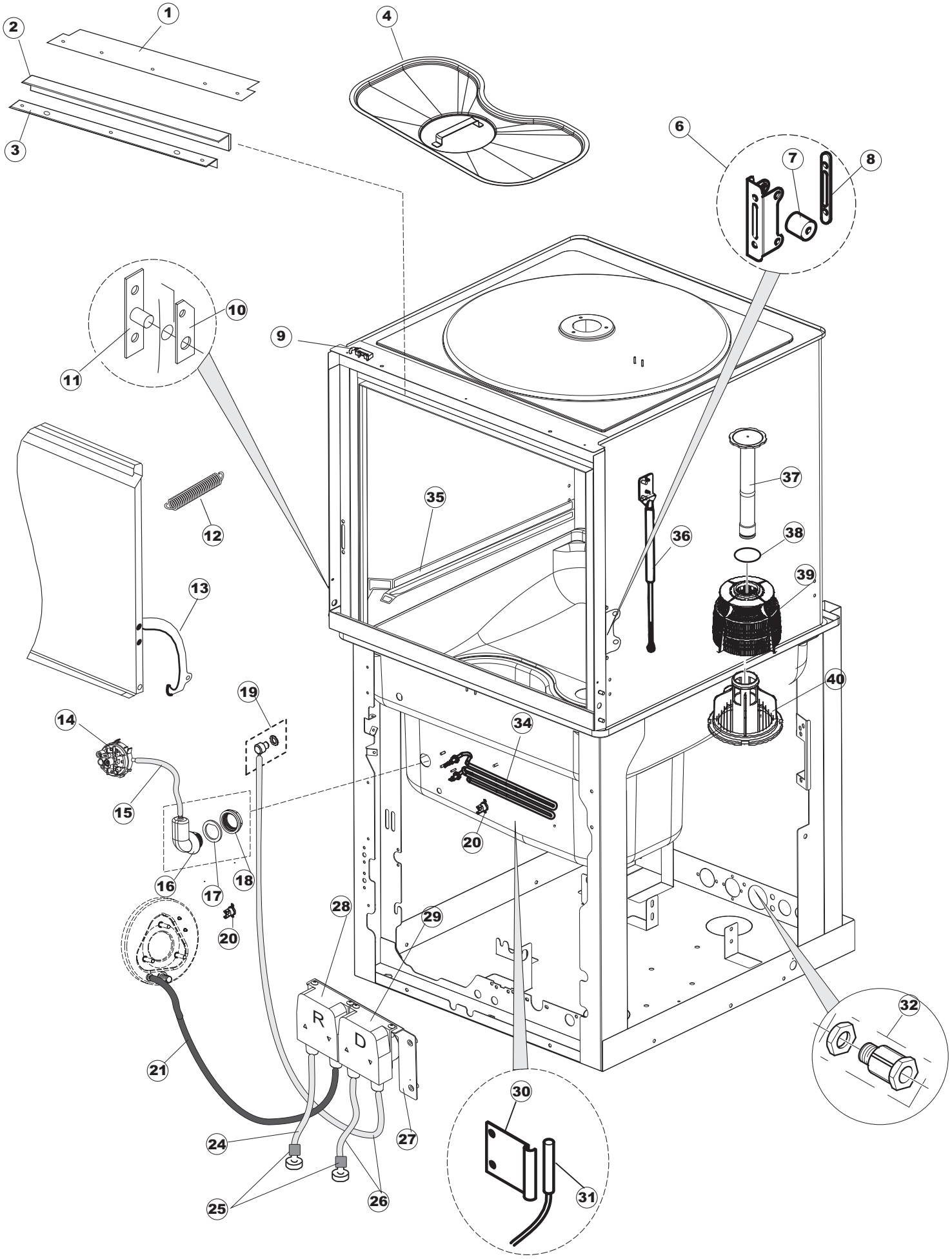
1
2
3
4
6
7
8
9
10
11
12
13
14
15
16
17
18
19
20
21
24
25
26
27
28
29
30
31
32
34
35
36
37
38
39
40
R
D

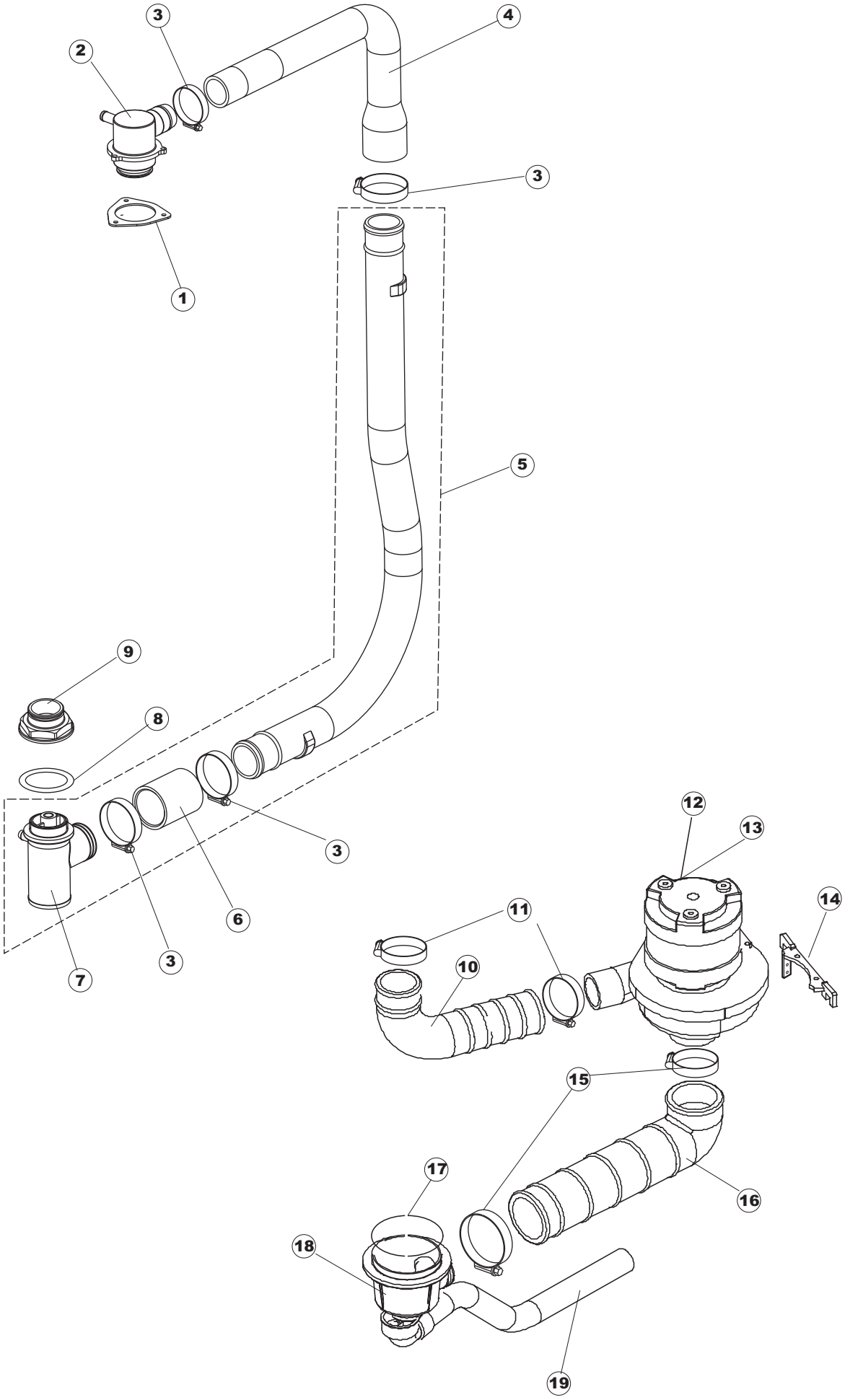
3
4
2
3
1
5
9
8
3
6
3
7
12
13
14
11
10
15
17
16
18
19

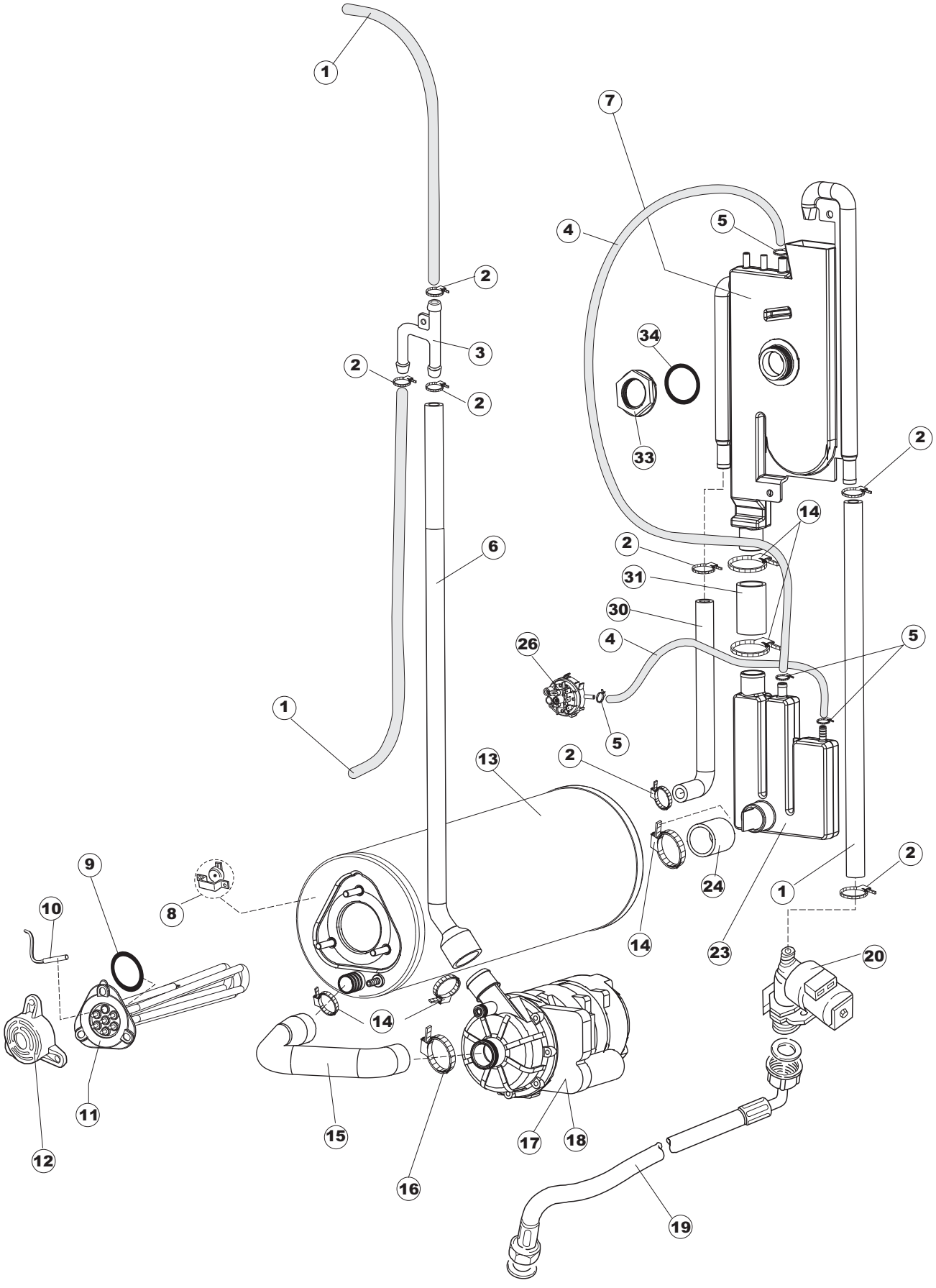
1
7
4
5
2
34
3
2
2
33
2
14
6
2
31
30
26
4
5
1
5
13
2
9
8
24
2
1
10
14
23
20
14
11
15
17
18
12
16
19

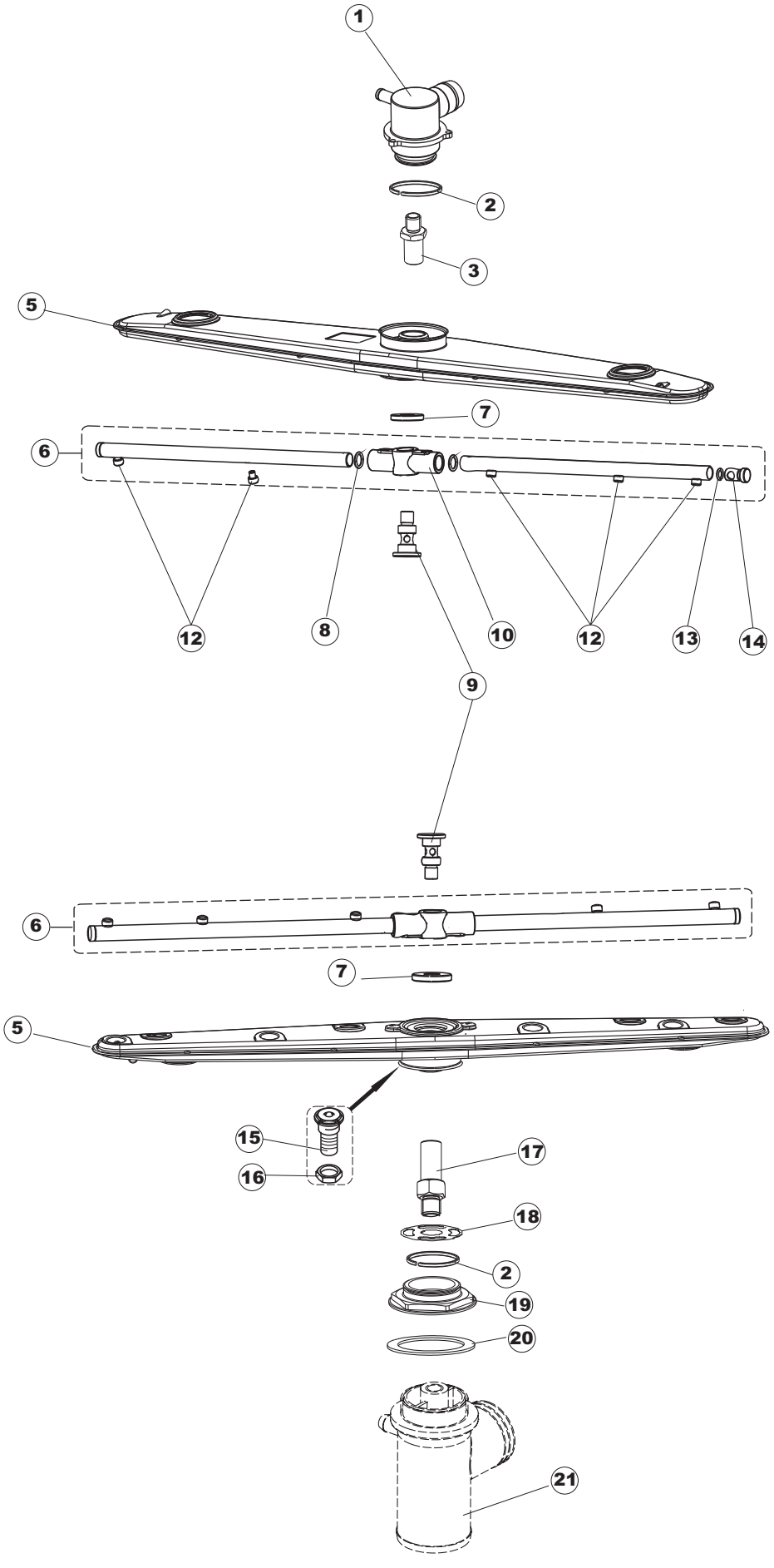
1
2
3
5
7
6
12
8
10
12
13
14
9
6
7
5
15
16
17
18
2
19
20
21

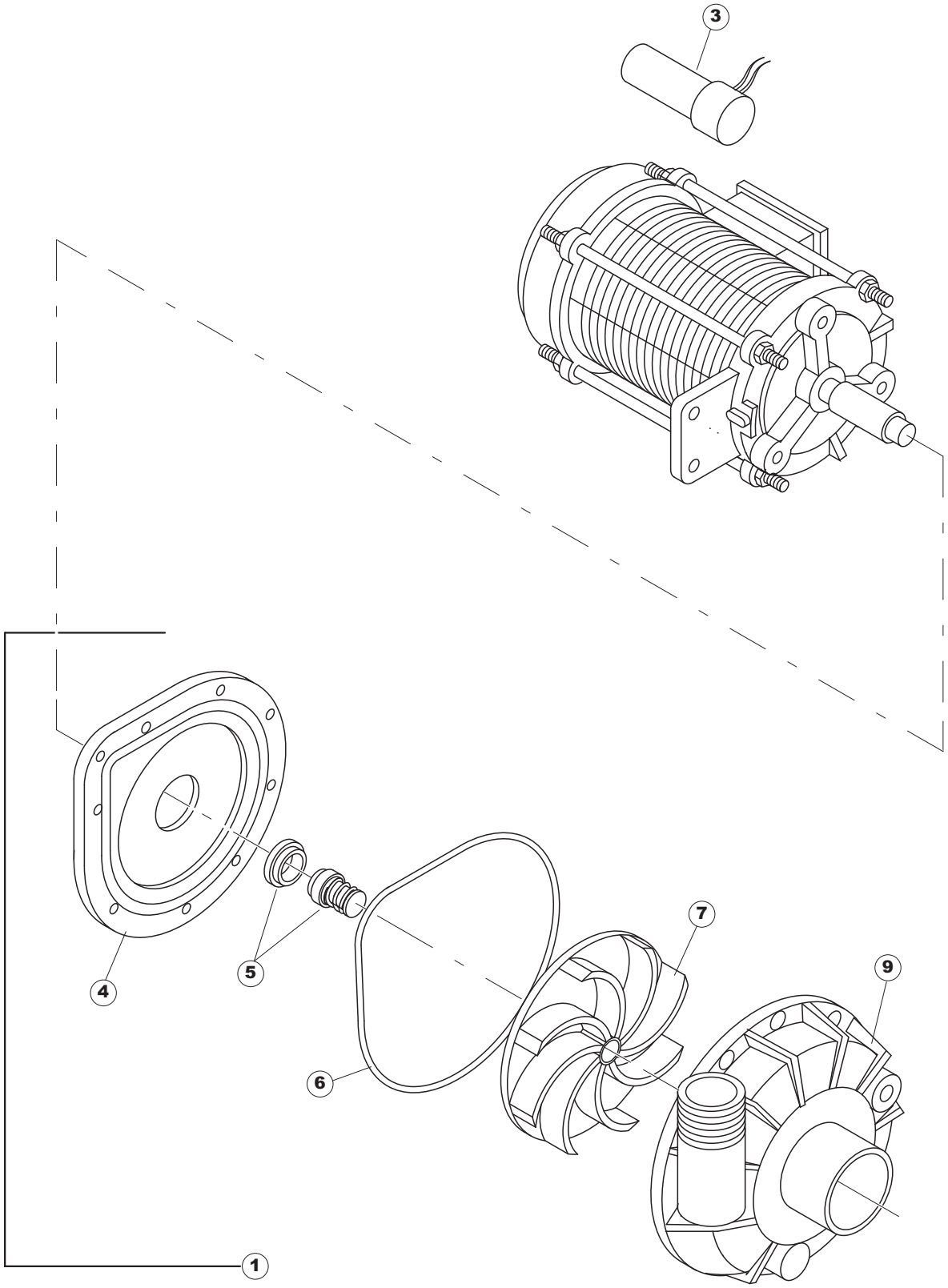

(CAM1733)

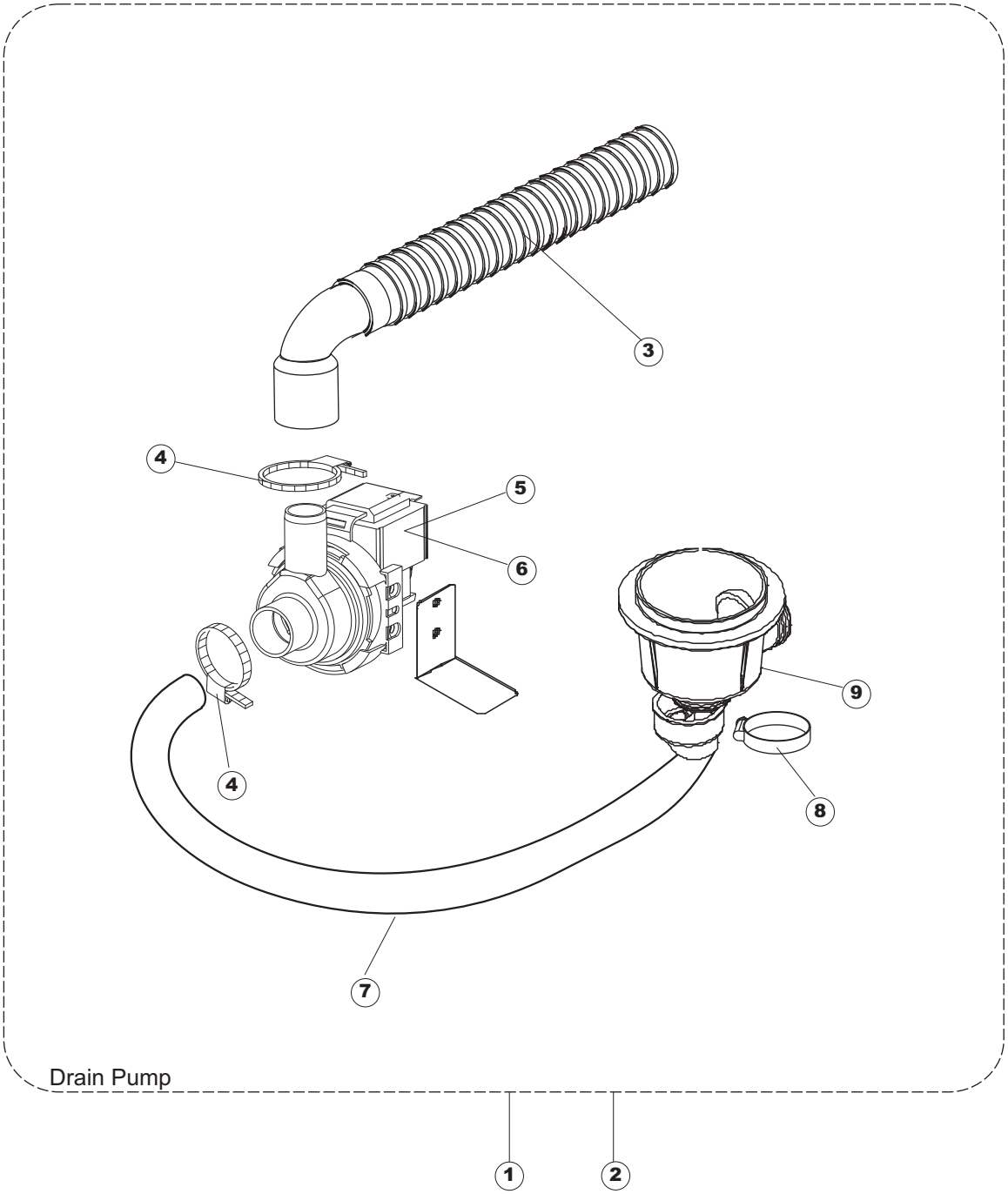

Drain Pump

KLP92FG POT&PAN WASHER LP92 LU60B FAGOR

(*) Recommended spare part.

Page	Spare part position	Spare part code no.	Old code number	Description	U.m.
1	1	35030		COVER	NR
1	2	35045		BACK PANEL	NR
1	3	35040		LEFT SIDE PANEL	NR
1	4	35035		RIGHT SIDE PANEL	NR
1	5	35056		CONTROL PANEL	NR
1	6	35008		DOOR	NR
1	7	35050		FRONT PANEL	NR
1	8	35500		NOT IN PRICE-LIST	
1	9	927006	DWP127	FOOT	NR
2	1	80459		WIRING PANEL	NR
2	2	DER111		RELAY 30A 230AC 653182300300	NR
2	3	929115	DER1108	RELAY 16A 230V	NR
2	4	220011	REB220011	TERMINAL BLOCK	NR
2	5	215032-1		MAIN BOARD	NR
2	6	228012		FUSE	NR
2	7	228011		FUSE	NR
2	8	228004		FUSE	NR
2	9	80350		CONTACTOR	NR
2	10	80933		FLAT CABLE	NR
2	11	227084		PUSH BUTTONS ASSEMBLY	NR
2	12	417119		NUT	NR
2	13	419036		INTERFACE BOARD DISTANCE KEEPERS	NR
2	14	35056		CONTROL PANEL	NR
2	15	35172		CONTROL ADHESIVE INTERFACE	NR
3	1	35005PZ		SQ.FISSAGGIO CRUSCOTTO LP92 LASERATO	NR
3	2	35017		DOOR GASKET LP92/GS60	NR
3	3	35016		NOT IN PRICE-LIST	
3	4	80410		STAINER	NR
3	6	35300		DOOR-STOP BAR	NR
3	7	35105		STOP RUN HOOD	NR
3	8	307012		DOOR STOPPER DRIVE	NR
3	9	80871		MAGNETIC DOOR SWITCH	NR

KLP92FG POT&PAN WASHER LP92 LU60B FAGOR

(*) Recommended spare part.

Page	Spare part position	Spare part code no.	Old code number	Description	U.m.
3	10	35510		SPESSORE LATERALE SPORTELLO LP92	NR
3	11	35060		CERNIERA SPORTELLO LP92	NR
3	12	35020		SPRING DOOR	NR
3	13	35300		DOOR-STOP BAR	NR
3	14	69850		PRESSURE SWITCH TYPE 45/22	NR
3	15	143131	SPG47	PIPE	MT
3	16	70600		AIR TRAP for pressure switch	NR
3	17	437098		GASKET	NR
3	18	417120		NUT	NR
3	19	999348		DETERGENT TANK FITTING	NR
3	20	926189	DRT140	CONTACT SAFETY-THERMOSTAT (REPLACES	NR
3	21	143005	SPG10	LINEN RUBBER PIPE 5X12 - BLACK	MT
3	24	H.775601		PIPE	MT
3	25	121993		filter aid dispenser	NR
3	26	143194	REB143194	PIPE	MT
3	27	80675		support bracket	NR
3	28	209042		DOSING PUMP	NR
3	29	209043		DETERGENT DOSING PUMP	NR
3	30	H.775489-001		Support temperature probe	NR
3	31	231016		TEMPERATURE PROBE	NR
3	32	929103	DEP520	CABLE GLAND	NR
3	34	70562		HEATING ELEMENT	NR
3	35	35500		NOT IN PRICE-LIST	
3	36	35070		SPRING	NR
3	37	80249	C.80249	OVERFLOW PIPE	NR
3	38	CGR4131NT		O-RING	NR
3	39	121081	REB121081	STAINER	NR
3	40	429038	REB429038	RING NUT	NR
4	1	437064	REB437064	GASKET	NR
4	2	35604		lower MAIN MANIFOLD	NR
4	3	CFS1A		HOSE CLAMP	NR
4	4	35603		PIPE	NR

KLP92FG POT&PAN WASHER LP92 LU60B FAGOR

(*) Recommended spare part.

Page	Spare part position	Spare part code no.	Old code number	Description	U.m.
4	5	35400		PIPE	NR
4	6	80189		DELIVERY WASH HOSE	NR
4	7	80179		PIPE FITTING	NR
4	8	80182		GASKET	NR
4	9	80285		RING NUT	NR
4	10	80188	C.80188	DELIVERY WASH HOSE	NR
4	11	CFS2		CLAMP, TORRO W1/W2B 50-70/12	NR
4	12	80134		WASHPUMP	NR
4	13	80113HZ		WASHPUMP	NR
4	14	80545		support bracket	NR
4	15	CFS3		CLAMP, HOSE-TYPE TORRO W2B 60-80/12	NR
4	16	80186	C.80186	suction pipe	NR
4	17	456040	REB456040	O-ring	NR
4	18	136020	REB136020	ASPIRATION AND DRAIN BODY	NR
4	19	143136	REB143136	DRAIN HOSE	NR
5	1	CFS18		HOSE CLAMP	NR
5	2	927322	CFS14	HOSE CLAMP	NR
5	3	H.882974-001		MAINFOLD	NR
5	4	143131	SPG47	PIPE	MT
5	5	423026		CABLE TIE	NR
5	6	41525		RINSE DELIVERY TUBE(CRP)	NR
5	7	144021		BREAK TANK	NR
5	8	926189	DRT140	CONTACT SAFETY-THERMOSTAT (REPLACES	NR
5	9	456002	REB456002	O-ring	NR
5	10	231016		TEMPERATURE PROBE	NR
5	11	230083C	REB230083C	HEATING ELEMENT	NR
5	12	69870		BOILER HEATING ELEMENT PROTECTION	NR
5	13	104061		BOILER	NR
5	14	CFS18		HOSE CLAMP	NR
5	15	69068		PIPE	NR
5	16	423008	CFS24	HOSE CLAMP	NR
5	17	80627		rinse pump 50 Hz	NR

KLP92FG POT&PAN WASHER LP92 LU60B FAGOR

(*) Recommended spare part.

Page	Spare part position	Spare part code no.	Old code number	Description	U.m.
5	18	80629		rinse pump 60 Hz	NR
5	19	143270		INLET WRAS PIPE	NR
5	20	240018		SOLENOID VALVE	NR
5	23	144032		LOADING SYSTEM BOILER CRP WITH BELL PRESSURE SWITCH	NR
5	24	127095		BOILER PIPE	NR
5	26	224002	REB224002	PRESSURE SWITCH TYPE 110-60	NR
5	30	143131	SPG47	PIPE	MT
5	31	929171	SPG2230	RUBBER PIPE 20X29	MT
5	33	417125		NUT	NR
5	34	437104		GASKET	NR
6	1	35604		lower MAIN MANIFOLD	NR
6	2	80184		SEALING RING	NR
6	3	80282	C.80282	PIVOT	NR
6	5	80311	C.80311	COMPLETE WASH ARM	NR
6	6	69721		COMPLETE RINSE ARM	NR
6	7	K80679		RING NUT M12 WITH TEFLON WASHER	NR
6	8	456019	REB456019	O-ring	NR
6	9	80644		PIVOT	NR
6	10	69632		BODY ARM	NR
6	12	927068	CSP290	RINSE-NOZZLE FOR RACK-CONVEYOR	NR
6	13	456030		O-ring	NR
6	14	926132		PLASTIC RINSE ARM CAP	NR
6	15	80310		GREY WASH ARM HOLDER (RAL 7001)	NR
6	16	80314	C.80314	RING NUT	NR
6	17	80283		BOTTOM PIVOT	NR
6	18	80316	C.80316	FLOW REDUCER	NR
6	19	80285		RING NUT	NR
6	20	80182		GASKET	NR
6	21	80179		PIPE FITTING	NR
7	1	80134		WASHPUMP	NR
7	2			NOT IN PRICE-LIST	
7	3	80191		CAPACITOR	NR

(*) Recommended spare part.

Page	Spare part position	Spare part code no.	Old code number	Description	U.m.
7	4	80196		FLANGE	NR
7	5	80193		GASKET	NR
7	6	80199		GASKET	NR
7	7	80197		ELECTROPUMP IMPELLER	NR
7	8			NOT IN PRICE-LIST	
7	9	80198		ELECTROPUMP HOUSING	NR
8	1	69702		NOT IN PRICE-LIST	
8	2	69702HZ		DRAIN PUMP KIT	NR
8	3	DZS151		DRAIN HOSE	NR
8	4	CFS18		HOSE CLAMP	NR
8	5	130177		DRAIN PUMP 50HZ	NR
8	6	130181		DRAIN PUMP 60 HZ	NR
8	7	127056	REB127056	PUMP ASPIRATION SLEEVE	NR
8	8	CFS1A		HOSE CLAMP	NR
8	9	136020	REB136020	ASPIRATION AND DRAIN BODY	NR