APPENDIX 5: EXPLODED VIEWS OF 120 SILVER MIXER AND PARTS LIST

EXPLODED VIEW OF MIXER BODY

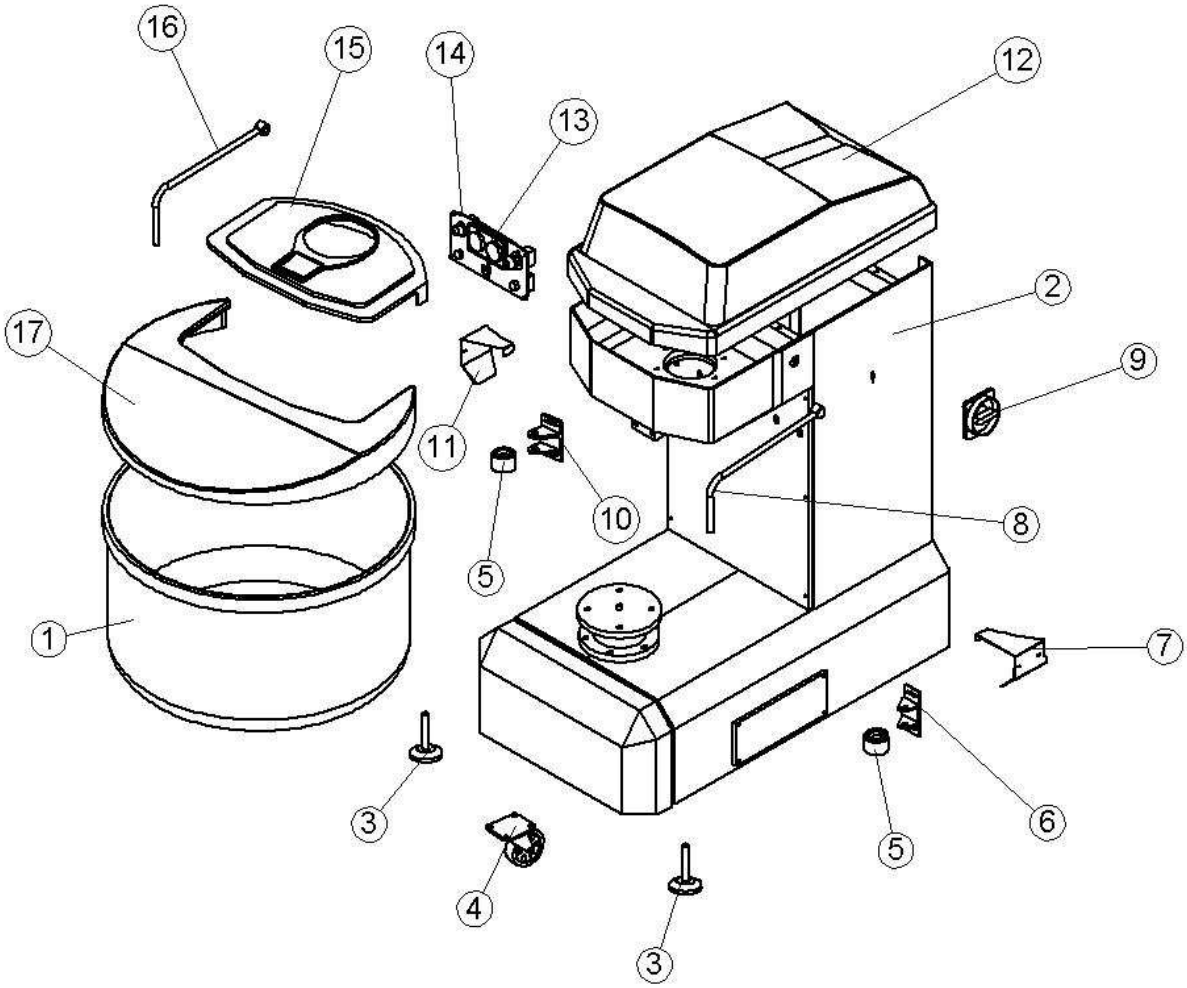

Pos.	Description	Qty	Part number
1	Bowl	1	261.009
2	Mixer body	1	285.051
3	Foot pin	2	C00920
4	Revolving support with wheel	2	C00765
5	Thrust roller	2	200.000
6	Support for right thrust roller	1	216.088
7	Covering plate for right thrust roller assembly	1	108.000
8	Right arm	1	118.026
9	Main switch	1	*[*]
10	Support for left thrust roller	1	216.087
11	Covering plate for left thrust roller assembly	1	108.001
12	Head cover	1	125.051
13	Timer	1	*[*]
14	Front control panel plate for double-scale digital timer (SITEC 72x144)	1	239.067
	Front control panel plate for electronic control panel	1	239.054
15	Fixed bowl cover in ABS plastic	1	205.045
	Fixed bowl cover in stainless steel	1	205.009
16	Left Arm	1	118.025
17	Mobile bowl cover in ABS plastic	1	202.022
	Mobile bowl cover – stainless steel grid	1	202.066

[*] **REFER TO ELECTRIC MATERIALS LEGEND**

EXPLODED VIEW OF THE HEAD GROUP

Tavola 1 codice 290.513

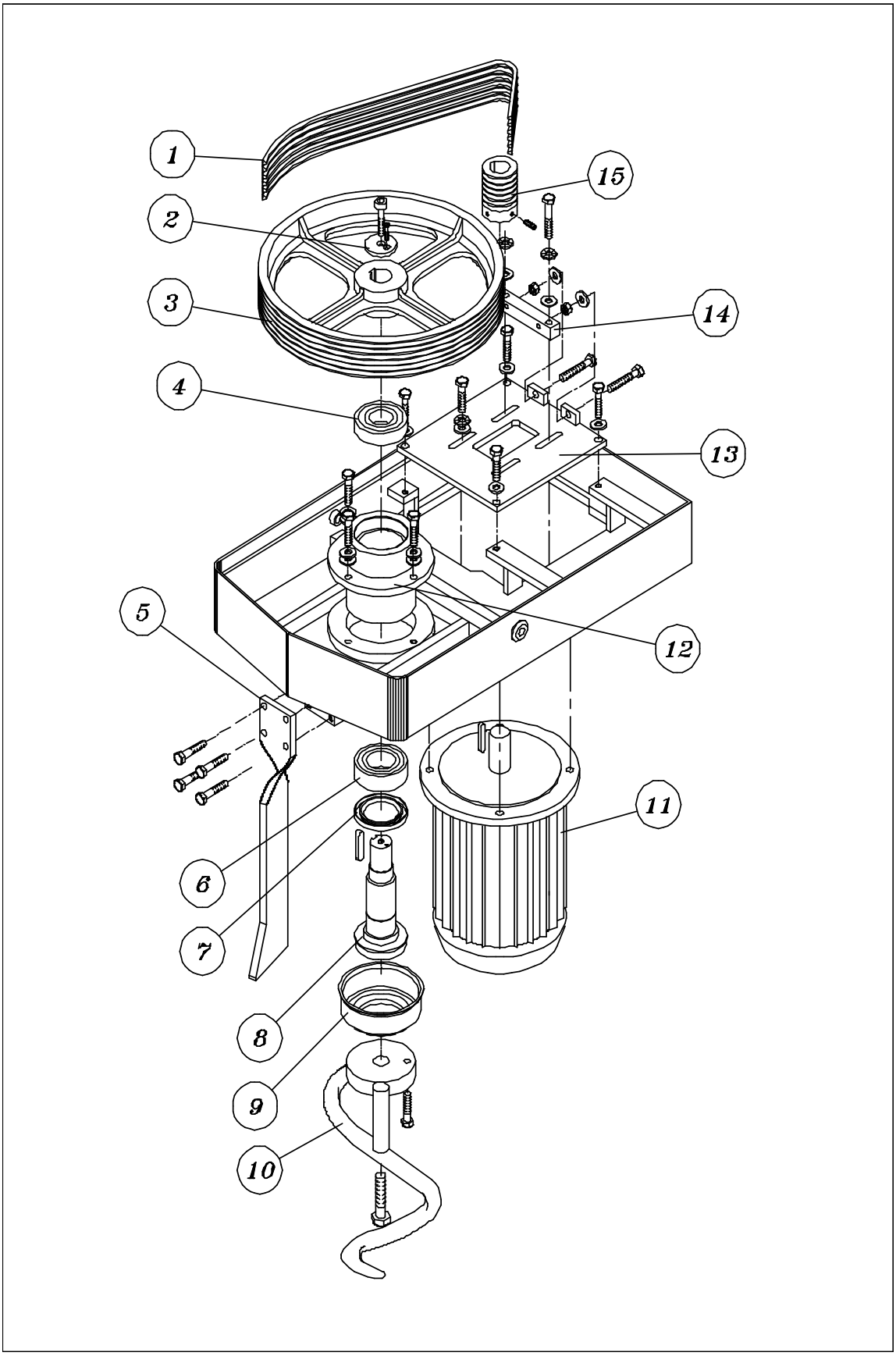

Pos.	Description	Qty	Part no.
1	Belt SPZ 1637	10	C00155
2	Washer	1	211.000
3	Belt pulley	1	180.005
4	Bearing 6309 2RS	1	C00888
5	Breaking column	1	177.025
6	Bearing 3211	1	C00903
7	Sealing ring MIM65/100/12	1	C00093
8	Spiral tool holder shaft	1	100.004
9	Cup	1	135.000
10	Spiral tool	1	220.009
11	Spiral tool motor KW 2.06 – 4.8	1	E00545*
12	Hub for spiral tool	1	213.011
13	Sliding plate for spiral tool motor	1	191.080
14	Belt tensioning block	1	113.000
15	Motor pulley	1	183.037

* FOR MIXERS IN 400/415V 50 HZ

EXPLODED VIEW OF THE BASE GROUP

code: 290501

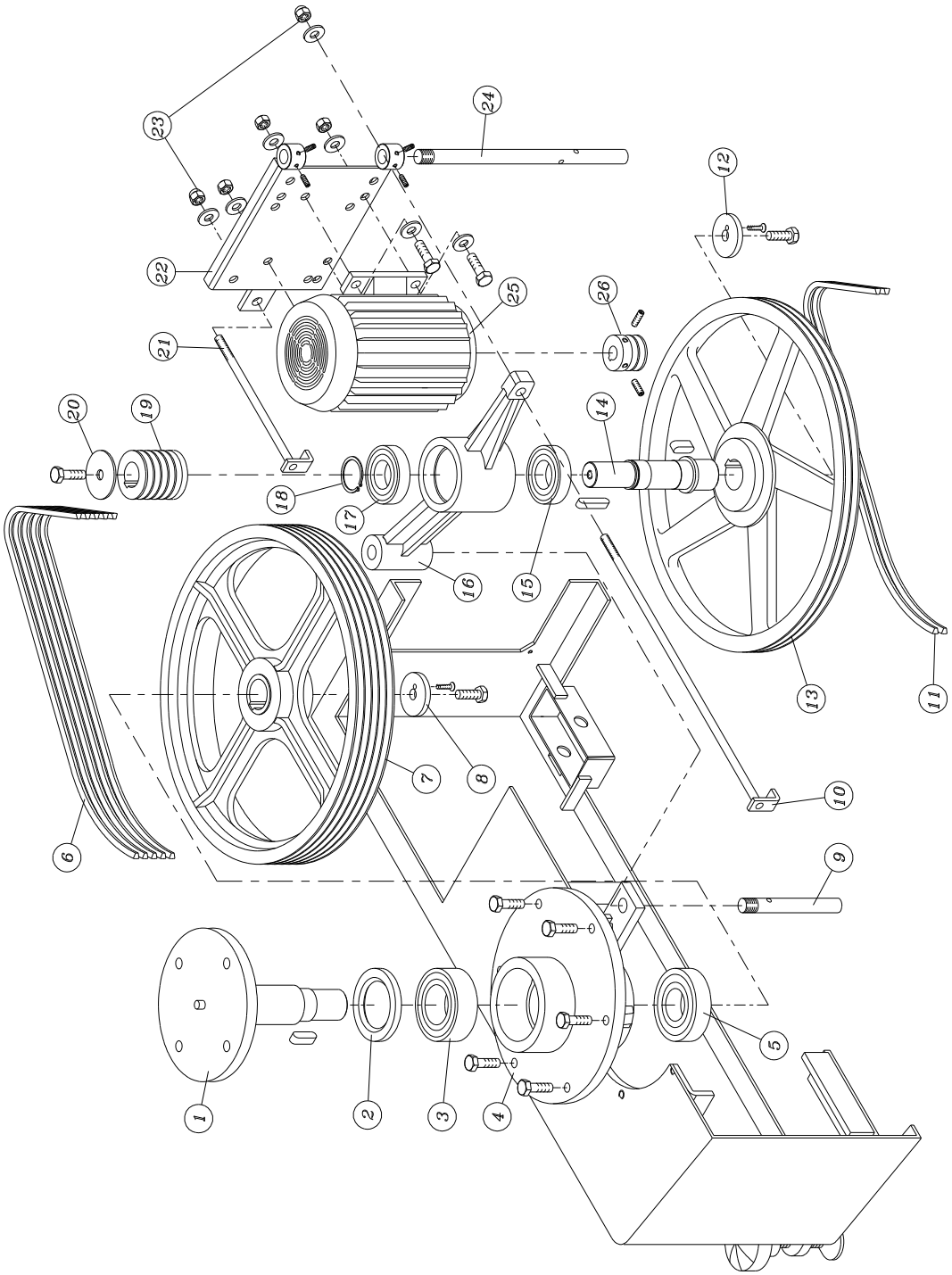

Pos.	Description	Qty	Part number
1	Bowl holder shaft	1	100.010
2	Sealing ring MIM 65/100/12	1	C00093
3	Bearing 3211	1	C00903
4	Bowl shaft support	1	213.015
5	Bearing 6309 2RS	1	C00888
6	Belt SPZ 1600	5	C00154
7	Pulley	1	180.000
8	Washer	1	211.000
9	Driving gear support pin	1	186.001
10	Tie-rod	1	154.000
11	Belt SPZ 1600	2	C00154
12	Washer	1	211.000
13	Pulley	1	180.004
14	Bowl driving gear shaft	1	100.003
15	Bearing 6208 2RS	1	C00902
16	Bowl driving gear support	1	213.001
17	Bearing 6208 2RS	1	C00902
18	Snap ring UNI 3653 E 39	1	C00058
19	Pulley	1	183.005
20	Washer	1	211.000
21	Tie-rod	1	154.000
22	Sliding plate for bowl motor	1	231.000
23	Cap nut UNI 5721 M10	2	C00053
24	Pin for bowl motor sliding plate	1	186.093
25	Motor KW 0.55	1	E00204*
26	Pulley	1	183.002

* FOR MIXERS IN 400/415V 50 HZ

N.B.
(i) Technical data is not binding. The data can be changed in order to improve the product.
(ii) Drawings and illustrations are only indicative.