# Hornos Mixtos
# Fours Mixtes
# Combi Ovens
# HeiBluftdämpfer
# Forno Misti

## Modelos:

**HEI-20/11**
**HEM-20/11**
**HEP-20/11**

***Diciembre 2007 December***

FAGOR

Fagor Industrial

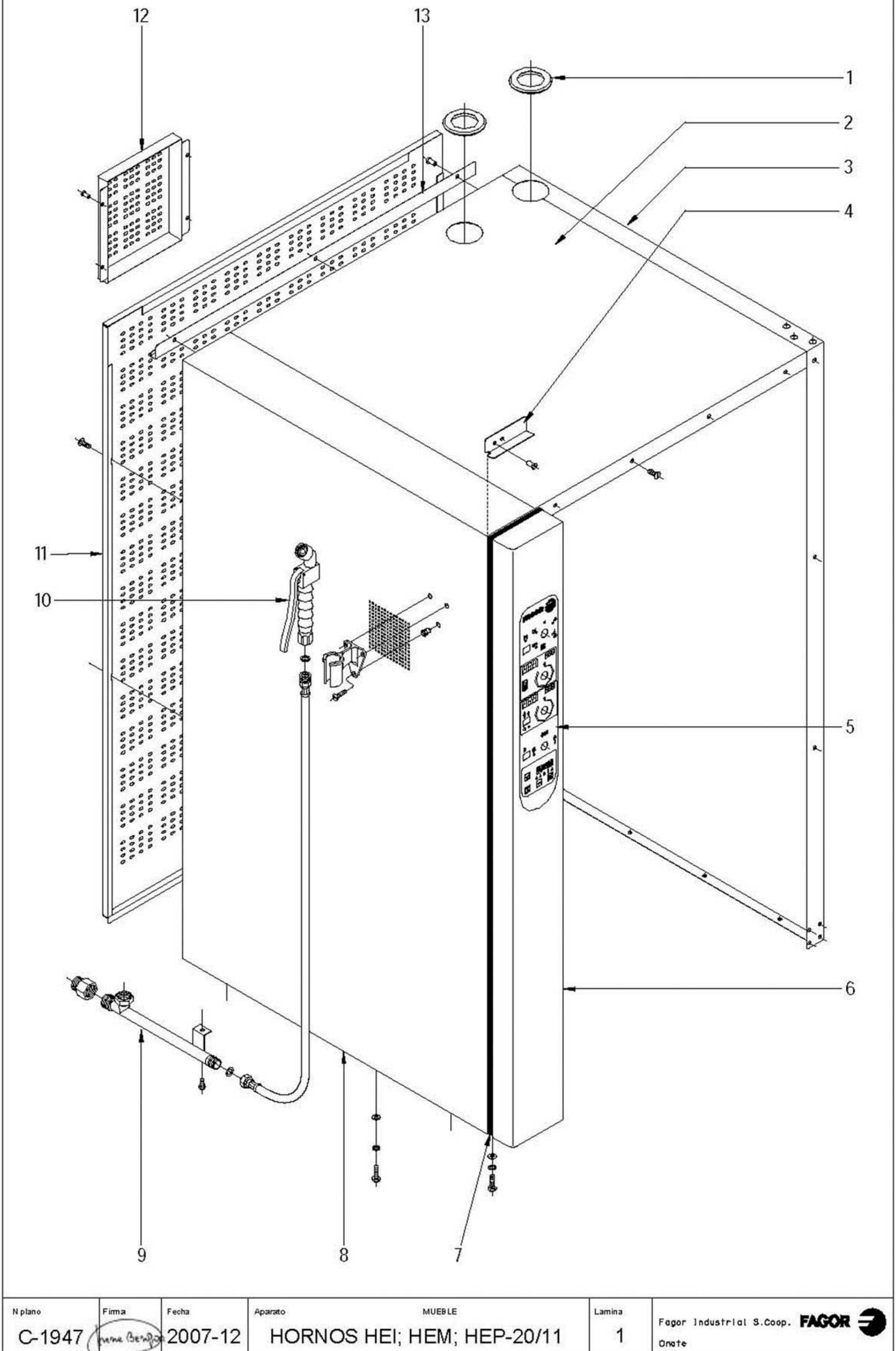


| N plano | Firma | Fecha | Aparato | | Lamina | |
|---|---|---|---|---|---|---|
| C-1947 | Irene Berrojo | 2007-12 | MUEBLE<br>HORNOS HEI; HEM; HEP-20/11 | | 1 | Fagor Industrial S.Coop.<br>Onate |

| MOD. | HORNOS | ZONA | MUEBLE | PLANO | C-1947 |
|---|---|---|---|---|---|

| ITEM | CODIGO | DENOMINACION | TEXTO | HEI 20/11 | HEM 20/11 | HEP 20/11 | | | | | NOTAS |
|---|---|---|---|---|---|---|---|---|---|---|---|
| 1 | R662813000 | PASAMUROS CHIMENEA 101003361 | FEEDTHROUGH FLUE PIPE 1010 | 2 | 2 | 2 | | | | | |
| 2 | R092880000 | PANEL SUPERIOR 20/11 | UPPER PANEL | 1 | 1 | 1 | | | | | |
| | Q221343000 | REMACHE EXAGONAL M6 | HEXAGONAL RIVET M.6 | 4 | 4 | 4 | | | | | |
| | Q232040000 | ARANDELA A6 | FLAT WASHER A.6 | 4 | 4 | 4 | | | | | |
| | Q262040000 | ARANDELA GROW. A6 A.304 | GROWER WASHER A.6 | 4 | 4 | 4 | | | | | |
| | Q012042000 | TORNILLO EXAGONAL M6x15 | HEXAGONAL BOLT M6x15 | 4 | 4 | 4 | | | | | |
| 3 | R092879000 | PANEL LATERAL DERECHO 20/11 | RIGHT SIDE PANEL | 1 | 1 | 1 | | | | | |
| | Q012042000 | TORNILLO EXAGONAL M6x15 | HEXAGONAL BOLT M6x15 | 4 | 4 | 4 | | | | | |
| | Q262040000 | ARAND.GROW. A6 A.304 | GROWER WASHER A.6 | 4 | 4 | 4 | | | | | |
| | Q232040000 | ARANDELA A6 | FLAT WASHER A.6 | 4 | 4 | 4 | | | | | |
| 4 | R662811000 | FIJACION PORTAMANDOS | CONTROL PANEL FIXATION | 1 | 1 | 1 | | | | | |
| | Q412002000 | REMACHE AVINOX Ø4x10MM | TUBULAR RIVET 4x7,5 | 2 | 2 | 2 | | | | | |
| 5 | R703042000 | SERIGRAFIA HEI-10/11 | SERIGRAPHY HEI-10 / 11 | 1 | _ | _ | | | | | |
| 5 | R673067000 | SERIGRAFIA HEM-10/11 20/11 | SERIGRAPHY HEM-10/11 20/11 | _ | 1 | _ | | | | | |
| 5 | R673068000 | SERIGRAFIA HEP-10/11 20/11 | SERIGRAPHY HEP-10/11 20/11 | _ | _ | 1 | | | | | |
| 6 | T102817000 | PANEL PORTAMANDOS HGC-20/11 | CONTROL PANEL | 1 | _ | _ | | | | | |
| 6 | R092867000 | PORTAMANDOS COMPLETO 20/11 | COMPLETE CONTROL HOLDER 2 | _ | 1 | 1 | | | | | |
| 7 | 3715400000 | JUNTA PANEL PORTAMANDOS | SEAL CONTROL HOLDER PANEL | 3 | 3 | 3 | | | | | |
| 8 | R092870000 | PANEL LATERAL IZDO 20/11 | LEFT SIDE PANEL 20/11 | 1 | 1 | 1 | | | | | |
| | Q012042000 | TORNILLO EXAGONAL M6x15 | HEXAGONAL BOLT M6x15 | 4 | 4 | 4 | | | | | |
| | Q262040000 | ARAND.GROW. A6 A.304 | GROWER WASHER A.6 | 4 | 4 | 4 | | | | | |
| | Q232040000 | ARANDELA A6 | FLAT WASHER A.6 | 4 | 4 | 4 | | | | | |
| 9 | R675002000 | SUPLEMENTO DUCHA | SUPPLEMENT FOR SHOWER SE | _ | 1 | 1 | | | | | |
| | Q306039000 | ARANDELA JUNTA 23,8X16,2X1,5 | JOINT WASHER 23,8x16,2x1,5 | _ | 1 | 1 | | | | | |
| | Q012042000 | TORNILLO EXAGONAL M6x15 | HEXAGONAL BOLT M6x15 | _ | 1 | 1 | | | | | |
| 10 | R095009000 | DUCHA COMPLETA | COMPLETE SHOWER | _ | 1 | 1 | | | | | |
| | Q042022000 | TORNILLO AVELLANADO M4x15 | COUNTERSUNK SCREW M.4x15 | _ | 3 | 3 | | | | | |
| 11 | R092869000 | PANEL POSTER. EXT. HEM/P 20/11 | EXT. REAR PANEL HEM/P 20/11 | 1 | 1 | 1 | | | | | |
| | Q152017000 | TORNILLO AMARRE M6X13 A304 | SCREW M.6x13 | 4 | 4 | 4 | | | | | |
| | Q221343000 | REMACHE EXAGONAL M6 | HEXAGONAL RIVET M.6 | 4 | 4 | 4 | | | | | |
| | | | | | | | | | | | |

| MOD. | HORNOS | ZONA | MUEBLE | PLANO | C-1947 |
|---|---|---|---|---|---|

| ITEM | CODIGO | DENOMINACION | TEXTO | HEI 20/11 | HEM 20/11 | HEP 20/11 | | | | | NOTAS |
|---|---|---|---|---|---|---|---|---|---|---|---|
| 12 | R092822000 | TAPA VENTILACION MOTOR | FAN MOTOR COVER | 2 | 2 | 2 | | | | | |
| | Q221342000 | REMACHE EXAGONAL M5 | HEXAGONAL RIVET M.5 | 8 | 8 | 8 | | | | | |
| 13 | R672811000 | CANALETA RECOGEAGUAS | REAR DRIP COLLECTOR | 1 | 1 | 1 | | | | | |
| | Q412002000 | REMACHE AVINOX Ø4x10MM | TUBULAR RIVET 4x7,5 | 3 | 3 | 3 | | | | | |

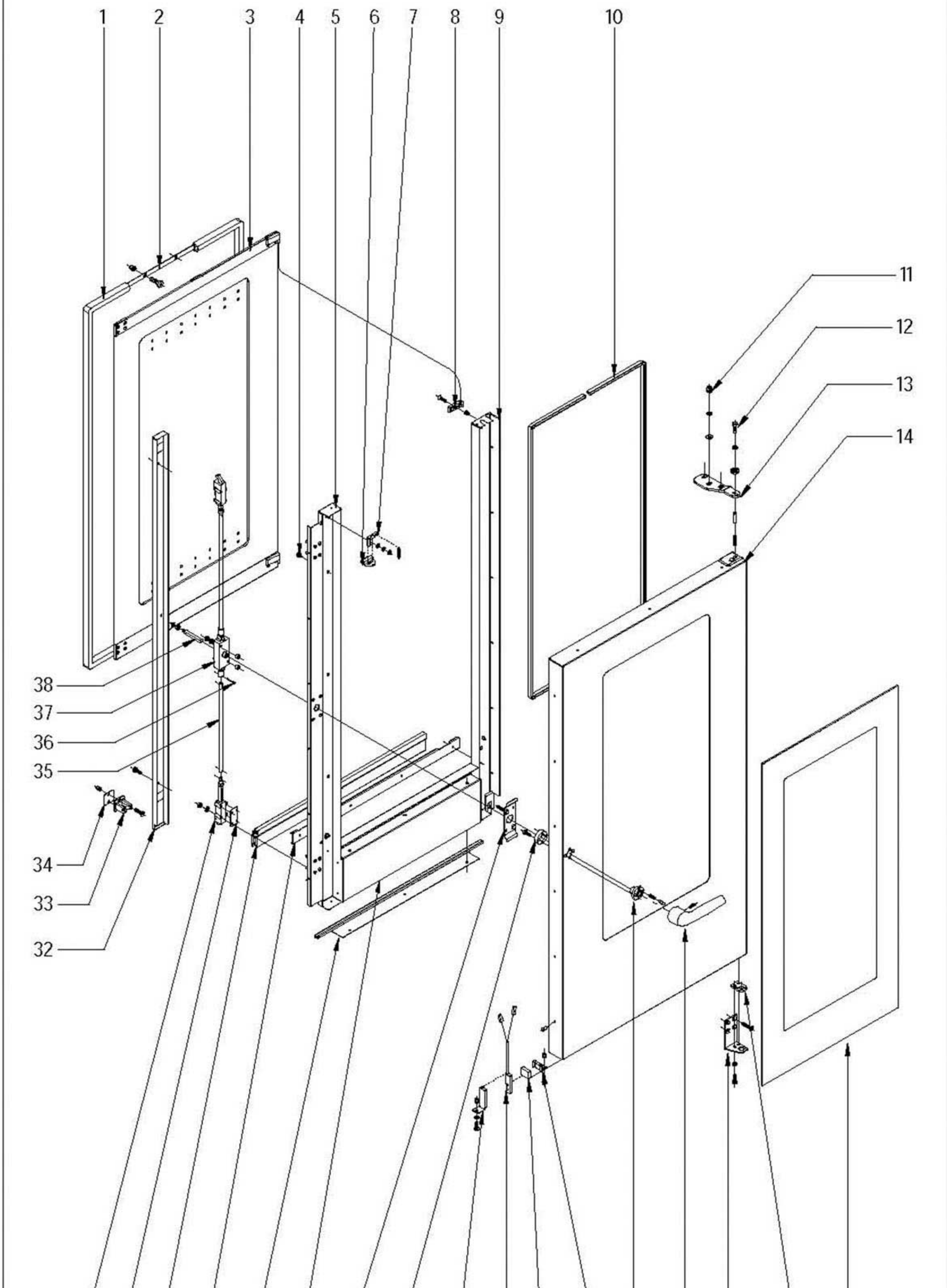


| N plano | Firma | Fecha | Aparato | | Lamina | |
|---|---|---|---|---|---|---|
| C-1948 | | 2007-12 | PUERTA<br>HORNOS HEI; HEM; HEP-20/11 | | 2 | Fagor Industrial S.Coop.<br>Oñate |

| MOD. | HORNOS | ZONA | PUERTA | PLANO | C-1948 |
|---|---|---|---|---|---|

| ITEM | CODIGO | DENOMINACION | TEXTO | HEI 20/11 | HEM 20/11 | HEP 20/11 | | | | | NOTAS |
|---|---|---|---|---|---|---|---|---|---|---|---|
| | **1100003126** | **KIT PUERTA 20/11 COMPL.** | DOOR 20/11 KIT | **1** | **1** | **1** | | | | | |
| 1 | R090510000 | JUNTA DE PUERTA 20-11 | DOOR JOINT | 1 | 1 | 1 | | | | | |
| 2 | R090512000 | FIJACION JUNTA COMP 20/11 | COMPLETE FIXATION JOINT | 1 | 1 | 1 | | | | | |
| | Q032021000 | TORN.ALOM.M4X10 | CURVED SCREW M.4x10 | 40 | 40 | 40 | | | | | |
| | Q222041000 | REMACHE EXAGONAL M4 (INOX) | HEXAGONAL RIVET M.4 | 40 | 40 | 40 | | | | | |
| **3** | **1100003125** | **KIT CRISTAL INTER. 20/11 COMPL.** | 20/11 INNER GLASS KIT | **1** | **1** | **1** | | | | | |
| 4 | T300513000 | TOPE CRISTAL INTERIOR 10/21 | INNER GLASS DOOR STOP | 8 | 8 | 8 | | | | | |
| 5 | R090569000 | CONTRAP MANILLA COMPL 20/11 | COMPLETE HANDLE DOOR 20/11 | 1 | 1 | 1 | | | | | |
| 6 | T300514000 | PESTILLO 10/21 | INNER GLASS FASTENING LATCI | 2 | 2 | 2 | | | | | |
| 7 | R090558000 | BASE DE PESTILLO | LATCH BASE | 2 | 2 | 2 | | | | | |
| | Q302022000 | ARANDELA 16X6X1.2 A.304 | FLAT WASHER 16x6x1,2 | 2 | 2 | 2 | | | | | |
| | Q162040000 | TUERCA EXAGONAL M6 | HEXAGONAL NUT M.6 | 2 | 2 | 2 | | | | | |
| | Q242040000 | ARANDELA ABANICO A6 A.304 | FAN SHAPED WASHER A.6 | 2 | 2 | 2 | | | | | |
| | R660605000 | MUELLE TENSOR | LATCH TENSOR SPRING | 2 | 2 | 2 | | | | | |
| 8 | R670615000 | BASE DE BISAGRA | HINGE BASE | 2 | 2 | 2 | | | | | |
| | Q222011000 | REMACHE EXAGONAL M.5 | HEXAGONAL RIVET M.5 | 2 | 2 | 2 | | | | | |
| | Q042032000 | TORNILLO AVELLANADO M5X15 | COUNTERSUNK SCREW M.5x15 | 2 | 2 | 2 | | | | | |
| 9 | R090567000 | CONTRAPUERTA BISA COMP 20/11 | COMP. HINGE DOOR REVERSE 2 | 1 | 1 | 1 | | | | | |
| 10 | 3715200000 | JUNTA CRISTAL | WINDOW SEAL | 1 | 1 | 1 | | | | | |
| 11 | Q212051000 | TUERCA SOMBRERETE M8 | CAP NUT M.8 | 3 | 3 | 3 | | | | | |
| | Q242050000 | ARANDELA ABANICO A8 A.304 | FAN SHAPED WASHER A.8 | 3 | 3 | 3 | | | | | |
| | Q302025000 | ARANDELA 8,4x20x1,5 A.304 | FLAT WASHER 8,4x20x1,5 | 3 | 3 | 3 | | | | | |
| 12 | Q012042000 | TORNILLO EXAGONAL M6x15 | HEXAGONAL BOLT M6x15 | 1 | 1 | 1 | | | | | |
| | Q242040000 | ARANDELA ABANICO A6 A.304 | FAN SHAPED WASHER A.6 | 1 | 1 | 1 | | | | | |
| | R662807000 | ARANDELA AMARRE | DOOR ANCHORING WASHER | 1 | 1 | 1 | | | | | |
| 13 | T300520000 | BISAGRA SUPERIOR | UPPER HINGE | 1 | 1 | 1 | | | | | |
| | R660534000 | EJE SUPERIOR | UPPER SHAFT | 1 | 1 | 1 | | | | | |
| | Z850519000 | RESORTE 06329 | SPRING | 1 | 1 | 1 | | | | | |
| 14 | R090565000 | PUERTA COMPLETA 20-11 | COMPLETE DOOR | 1 | 1 | 1 | | | | | |
| | Q412002000 | REMACHE AVINOX Ø4x10MM | TUBULAR RIVET 4x7,5 | 14 | 14 | 14 | | | | | |
| 15 | R090562000 | CRISTAL EXTERIOR 20/11 | EXTERNAL GLASS | 1 | 1 | 1 | | | | | |

| MOD. | HORNOS | ZONA | PUERTA | PLANO | C-1948 |
|---|---|---|---|---|---|

| ITEM | CODIGO | DENOMINACION | TEXTO | HEI 20/11 | HEM 20/11 | HEP 20/11 | | | | | NOTAS |
|---|---|---|---|---|---|---|---|---|---|---|---|
| 16 | R660549000 | GUIA EJE INFERIOR FUNDIDO | LOWER SHAFT GUIDE | 1 | 1 | 1 | | | | | |
| | Q062040000 | TORNILLO AVELLANADO M6X16 | COUNTERSUNK SCREW M.6x16 | 4 | 4 | 4 | | | | | |
| 17 | R090561000 | BISAGRA INFERIOR PLEGADA | LOWER FOLDER HINGE | 1 | 1 | 1 | | | | | |
| | Q242040000 | ARANDELA ABANICO A6 A.304 | FAN SHAPED WASHER A.6 | 2 | 2 | 2 | | | | | |
| | Q012041000 | TORNILLO EXAGONAL M6x10 A304 | HEXAGONAL SCREW M.6x10 | 2 | 2 | 2 | | | | | |
| 18 | T130502000 | MANILLA COMPLETA | HANDLE | 1 | 1 | 1 | | | | | |
| | Q132042000 | VARILLA ROSCADA M6X15 | THREADED ROD M.6x15 | 1 | 1 | 1 | | | | | |
| | T130510000 | TAPON Ø 16 BAGAL Ext. | COVER Ø 16 BAGAL Ext. | 1 | 1 | 1 | | | | | |
| 19 | T130515000 | GUIA MANILLA | HANDLE GUIDE | 1 | 1 | 1 | | | | | |
| | T490518000 | PITON ENGANCHE PUERTA | DOOR FASTENER SPIKE | 2 | 2 | 2 | | | | | |
| | T130506000 | RESORTE 34548 | SPRING | 2 | 2 | 2 | | | | | |
| 20 | T300525000 | SOPORTE IMAN | MAGNET HOLDER | 1 | 1 | 1 | | | | | |
| | Q222011000 | REMACHE EXAGONAL M.5 | HEXAGONAL RIVET M.5 | 1 | 1 | 1 | | | | | |
| | Q032031000 | TORNILLO ALOMADO M5X10 | CURVED SCREW M.5x10 | 1 | 1 | 1 | | | | | |
| 21 | T300526000 | IMAN | MAGNET | 1 | 1 | 1 | | | | | |
| 22 | Z100522000 | INTERRUPTOR MAGNETICO | MAGNETIC SWITCH (DOOR) | 1 | 1 | 1 | | | | | |
| 23 | T302819000 | SOPORTE MICRO PUERTA | DOOR MAGNETIC SWITCH HOLD | 1 | 1 | 1 | | | | | |
| | Q222011000 | REMACHE EXAGONAL M.5 | HEXAGONAL RIVET M.5 | 1 | 1 | 1 | | | | | |
| | Q242030000 | ARANDELA ABANICO A5 A.304 | FAN SHAPED WASHER A.5 | 1 | 1 | 1 | | | | | |
| | Q152004000 | TORNIL. APLASTADO M5X13 A 304 | FLAT SCREW M.5x13 | 1 | 1 | 1 | | | | | |
| 24 | T130514000 | SOPORTE RESORTE | SPRING HOLDER | 1 | 1 | 1 | | | | | |
| | Q032032000 | TORNILLO ALOMADO M5x15 | CURVED SCREW M.5x15 | 2 | 2 | 2 | | | | | |
| 25 | T130511000 | SUPLEMENTO SUJ. CERRADURA | LOCK FIXING SUPPLEMENT | 1 | 1 | 1 | | | | | |
| 26 | R090570000 | CHAPA AMARRE CONTRAP 20/11 | DOOR REVERSE PLATE FASTEN | 1 | 1 | 1 | | | | | |
| 27 | R090571000 | SUPERIOR CIERRE PUERTA 20/11 | DOOR UPPER LOCK 20/11 | 1 | 1 | 1 | | | | | |
| 28 | R090553000 | CHAPA JUNTA CONTRAPUERTA | DOOR REVERSE SEAL PLATE | 1 | 1 | 1 | | | | | |
| 29 | R090551000 | JUNTA CIERRE INFERIOR 20/11 | SEAL LOWER LOCK 20/11 | 1 | 1 | 1 | | | | | |
| 30 | T080503000 | SUPLEMENTO ELEMENTO CIERRE | CLOSING ELEMENT SUPPLEMEN | 6 | 6 | 6 | | | | | |
| 31 | T080504000 | ELEMENTO CIERRE | CLOSING COMPONENT | 2 | 2 | 2 | | | | | |
| | Q262040000 | ARAND.GROW. A6 A.304 | GROWER WASHER A.6 | 8 | 8 | 8 | | | | | |
| | Q162040000 | TUERCA EXAGONAL M6 | HEXAGONAL NUT M.6 | 8 | 8 | 8 | | | | | |

| MOD. | HORNOS | ZONA | PUERTA | PLANO | C-1948 |
|---|---|---|---|---|---|

| ITEM | CODIGO | DENOMINACION | TEXTO | HEI 20/11 | HEM 20/11 | HEP 20/11 | | | | | NOTAS |
|---|---|---|---|---|---|---|---|---|---|---|---|
| 32 | R090557000 | TAPA CIERRE PUERTA 20/11 | DOOR LOCK COVER 20/11 | 1 | 1 | 1 | | | | | |
| | Q032021000 | TORNILLO ALOMADO M4X10 | CURVED SCREW M.4x10 | 4 | 4 | 4 | | | | | |
| | Q222041000 | REMACHE EXAGONAL M4 (INOX) | HEXAGONAL RIVET M.4 | 4 | 4 | 4 | | | | | |
| 33 | T110506000 | ENGANCHE PUERTA | FASTENER | 2 | 2 | 2 | | | | | |
| | Q043145000 | TORN. AVELLANADO 6X30 LATON | BOLT, BRASS COUNTERSUNK 6X | 4 | 4 | 4 | | | | | |
| 34 | R660538000 | CALZO DE ENGANCHE | COUPLING CHOCK | 6 | 6 | 6 | | | | | |
| | Q221343000 | REMACHE EXAGONAL M.6 | HEXAGONAL RIVET M.6 | 4 | 4 | 4 | | | | | |
| 35 | R090514000 | TUBO ALARGADERA 20-11/20-21 | ROD | 2 | 2 | 2 | | | | | |
| 36 | Q352001000 | PASADOR DE ALETAS 2X20 | COTTER PIN 2x15 | 4 | 4 | 4 | | | | | |
| 37 | T130509000 | MECANISMO CIERRE | CLOSING MECHANISM | 1 | 1 | 1 | | | | | |
| | Q262040000 | ARAND.GROW. A6 A.304 | GROWER WASHER A.6 | 2 | 2 | 2 | | | | | |
| | Q162040000 | TUERCA EXAGONAL M6 | HEXAGONAL NUT M.6 | 2 | 2 | 2 | | | | | |
| | Z608410000 | CASQUILLO AMARRE TECLADO | COLLAR | 2 | 2 | 2 | | | | | |
| 38 | T490519000 | EJE DE MANILLA PUERTA | DOOR HANDLE SHAFT | 1 | 1 | 1 | | | | | |
| | T130505000 | CASQUILLO | BUSHING | 1 | 1 | 1 | | | | | |

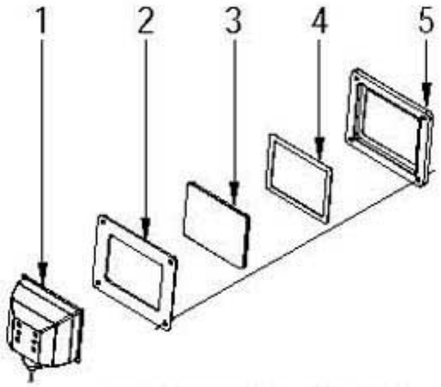


DETALLE DE LAMPARA




| N plano | Firma | Fecha | Aparato | Lamina | |
|---|---|---|---|---|---|
| C-1949 | | 2007-12 | MUEBLE INTERIOR<br>HORNOS HEI; HEM; HEP-20/11 | 3 | Fagor Industrial S.Coop. FAGOR<br>Oñate |

| MOD. | HORNOS | ZONA | MUEBLE INTERIOR | PLANO | C-1949 |
|---|---|---|---|---|---|

| ITEM | CODIGO | DENOMINACION | TEXTO | HEI 20/11 | HEM 20/11 | HEP 20/11 | | | | | NOTAS |
|---|---|---|---|---|---|---|---|---|---|---|---|
| 1 | T303023000 | PORTALAMPARAS | LAMP HOLDER | 2 | 2 | 2 | | | | | |
| 2 | T303026000 | JUNTA EXTERIOR LAMPARA | LAMP OUTER JOINT | 2 | 2 | 2 | | | | | |
| 3 | T303025000 | CRISTAL LAMPARA | LAMP GLASS | 2 | 2 | 2 | | | | | |
| 4 | T303027000 | JUNTA INTERIOR LAMPARA | LAMP INNER JOINT | 2 | 2 | 2 | | | | | |
| 5 | T303047000 | MARCO LAMPARA | LAMP ANCHORING PLATEN | 2 | 2 | 2 | | | | | |
| | R663013000 | LAMPARA 10W-12V | LIGHT 10W 12V | 2 | 2 | 2 | | | | | |
| | Q222041000 | REMACHE EXAGONAL M.4 INOX | HEXAGONAL RIVET M.4 | 8 | 8 | 8 | | | | | |
| | Q032021000 | TORNILLO ALOMADO M4X10 | CURVED SCREW M.4x10 | 8 | 8 | 8 | | | | | |
| 6 | R092652000 | SOPORTE AISLANTE POST. 20/11 | REAR INSULATION SUPPORT | 1 | 1 | 1 | | | | | |
| | Q221343000 | REMACHE EXAGONAL M.6 | HEXAGONAL RIVET M.6 | 12 | 12 | 12 | | | | | |
| | Q232040000 | ARANDELA A6 | FLAT WASHER A.6 | 24 | 24 | 24 | | | | | |
| | Q262040000 | ARAND.GROW. A6 A.304 | GROWER WASHER A.6 | 24 | 24 | 24 | | | | | |
| | Q012042000 | TORNILLO EXAGONAL M6x15 | HEXAGONAL BOLT M6x15 | 24 | 24 | 24 | | | | | |
| 7 | R662614000 | AISLANTE 650X650X20 | BASE&ROOF INSULATION 650x65 | 6 | 6 | 6 | | | | | |
| 8 | T133036000 | BASE SUJECION SONDA | FIXING CORE PROBE | _ | 1 | 1 | | | | | |
| 9 | R092622000 | AISLANTE 1370X650X20 | INSULATION 1370X650X20 | 5 | 5 | 5 | | | | | |
| 10 | T133037000 | TAPA SUJECION SONDA | COVER CORE PROBE | _ | 1 | 1 | | | | | |
| 11 | R092644000 | CUERPO INTERIOR HEI-20/11 | INNER BODY HEI-20/11 | 1 | _ | _ | | | | | |
| 11 | R092640000 | CUERPO INTERIOR HEM-20/11 | INNER BODY HEM-20/11 | _ | 1 | 1 | | | | | |
| | R662636000 | REFUERZO BASE 2011 | BASE REINFORCEMENT 2011 | 1 | 1 | 1 | | | | | |
| | Q162040000 | TUERCA EXAGONAL M6 | HEXAGONAL NUT M.6 | 8 | 8 | 8 | | | | | |
| 12 | R092683000 | SEPARADOR CENTRAL 20-11E | CENTRAL REPARATOR 20-11E | 1 | 1 | 1 | | | | | |
| | Q232040000 | ARANDELA A6 | FLAT WASHER A.6 | 2 | 2 | 2 | | | | | |
| | Q262040000 | ARAND.GROW. A6 A.304 | GROWER WASHER A.6 | 2 | 2 | 2 | | | | | |
| | Q162040000 | TUERCA EXAGONAL M6 | HEXAGONAL NUT M.6 | 2 | 2 | 2 | | | | | |
| 13 | T322606000 | REDUCC. CUBREVENT. 60HzD160 | FANCOVER REDUC. 60HzD160 | 2 | 2 | 2 | | | | | SOLO HORNOS A 60 HZ |
| 14 | R092680000 | FIJACIÓN SUPLEMENTO DOBLE | DOUBLE SUPLEMENT ATTACHN | 2 | 2 | 2 | | | | | |
| | Q412002000 | REMACHE AVINOX Ø4x10MM | TUBULAR RIVET 4x7,5 | 8 | 8 | 8 | | | | | |
| 15 | R092677000 | ESCUADRA SUJECCION | FASTENING BRACKET | 2 | 2 | 2 | | | | | |
| | Q412002000 | REMACHE AVINOX Ø4x10MM | TUBULAR RIVET 4x7,5 | 4 | 4 | 4 | | | | | |
| | | | | | | | | | | | |

| MOD. | HORNOS | ZONA | MUEBLE INTERIOR | PLANO | C-1949 |
|---|---|---|---|---|---|

| ITEM | CODIGO | DENOMINACION | TEXTO | HEI 20/11 | HEM 20/11 | HEP 20/11 | | | | | NOTAS |
|---|---|---|---|---|---|---|---|---|---|---|---|
| 16 | T302643000 | FIJACIÓN SUPLEMENTO | FAN COVER SUPPLEMENT BINDI | 8 | 8 | 8 | | | | | |
| | Q412002000 | REMACHE AVINOX Ø4x10MM | TUBULAR RIVET 4x7,5 | 16 | 16 | 16 | | | | | |
| 17 | T132644000 | 2011G SUPL. CUBREVENTILADOR | 2011G SUPPL. FAN COVER | 2 | 2 | 2 | | | | | |
| 18 | T302643000 | FIJACIÓN SUPLEMENTO | FAN COVER SUPPLEMENT BINDI | 2 | 2 | 2 | | | | | |
| | Q412002000 | REMACHE AVINOX Ø4x10MM | TUBULAR RIVET 4x7,5 | 4 | 4 | 4 | | | | | |
| 19 | R092643000 | CUBREVENTILADOR 20/11E | FAN COVER 20/11E | 1 | 1 | 1 | | | | | |
| | Q412002000 | REMACHE AVINOX Ø4x10MM | TUBULAR RIVET 4x7,5 | 23 | 23 | 23 | | | | | |
| 20 | R092682000 | FILTRO DESAGÜE | DRAINAGE FILTER | 1 | 1 | 1 | | | | | |
| | Q232030000 | ARANDELA A5 | FLAT WASHER A.5 | 1 | 1 | 1 | | | | | |
| | Q162030000 | TUERCA EXAGONAL M5 | HEXAGONAL NUT M.5 | 1 | 1 | 1 | | | | | |
| 21 | T132831000 | REFUERZO APOYOS COMP.20/11 | COMP.SUPPORT REINFORCEMB | 1 | 1 | 1 | | | | | |
| | Q412002000 | REMACHE AVINOX Ø4x10MM | TUBULAR RIVET 4x7,5 | 24 | 24 | 24 | | | | | |
| 22 | R092878000 | BASE EXTERIOR DE HORNO 20/11 | OVEN OUTER BASE 20/11 | 1 | 1 | 1 | | | | | |
| 23 | T132610000 | SOPORTE LATER. AISLANTE 20/11 | SIDE SUPPORT INSULATION 20/ | 1 | 1 | 1 | | | | | |
| 24 | R092830000 | PATA REF. AA179EOAQ47CCN | REGULABLE LEG | 4 | 4 | 4 | | | | | |
| | Q221343000 | REMACHE EXAGONAL M6 | HEXAGONAL RIVET M.6 | 16 | 16 | 16 | | | | | |
| | Q242040000 | ARANDELA ABANICO A6 A.304 | FAN SHAPED WASHER A.6 | 16 | 16 | 16 | | | | | |
| | Q012042000 | TORNILLO EXAGONAL M6x15 | HEXAGONAL BOLT M6x15 | 16 | 16 | 16 | | | | | |
| 25 | R092693000 | FIJACION PANEL LATERAL | SIDE PANEL ATTACHMENT | 1 | 1 | 1 | | | | | |
| | Q412002000 | REMACHE AVINOX Ø4x10MM | TUBULAR RIVET 4x7,5 | 3 | 3 | 3 | | | | | |
| 26 | R092672000 | REFUERZO PEDESTAL | PEDESTAL REINFORCEMENT | 2 | 2 | 2 | | | | | |
| | Q412002000 | REMACHE AVINOX Ø4x10MM | TUBULAR RIVET 4x7,5 | 8 | 8 | 8 | | | | | |
| 27 | R342802000 | GUIA CUADRO ELECTRICO " | SWITCHBOARD GUIDE" | 1 | 1 | 1 | | | | | |
| 28 | R092670000 | PROTECTOR PORTAMANDOS | CONTROL HOLDER PROTECTOR | 1 | 1 | 1 | | | | | |
| | Q412002000 | REMACHE AVINOX Ø4x10MM | TUBULAR RIVET 4x7,5 | 6 | 6 | 6 | | | | | |
| 29 | R092624000 | AISLANTE 670X400X20 | CENTRAL INSULATOR 670x400x | 1 | 1 | 1 | | | | | |
| 30 | R662616000 | AISLANTE 560X60X20 | REAR INSULATION 560x60x20 | 6 | 6 | 6 | | | | | |
| 31 | R672631000 | AISLANTE 670X200X20 | INSULATION 670x230x20 | 2 | 2 | 2 | | | | | |
| | | | | | | | | | | | |
| | | | | | | | | | | | |
| | | | | | | | | | | | |

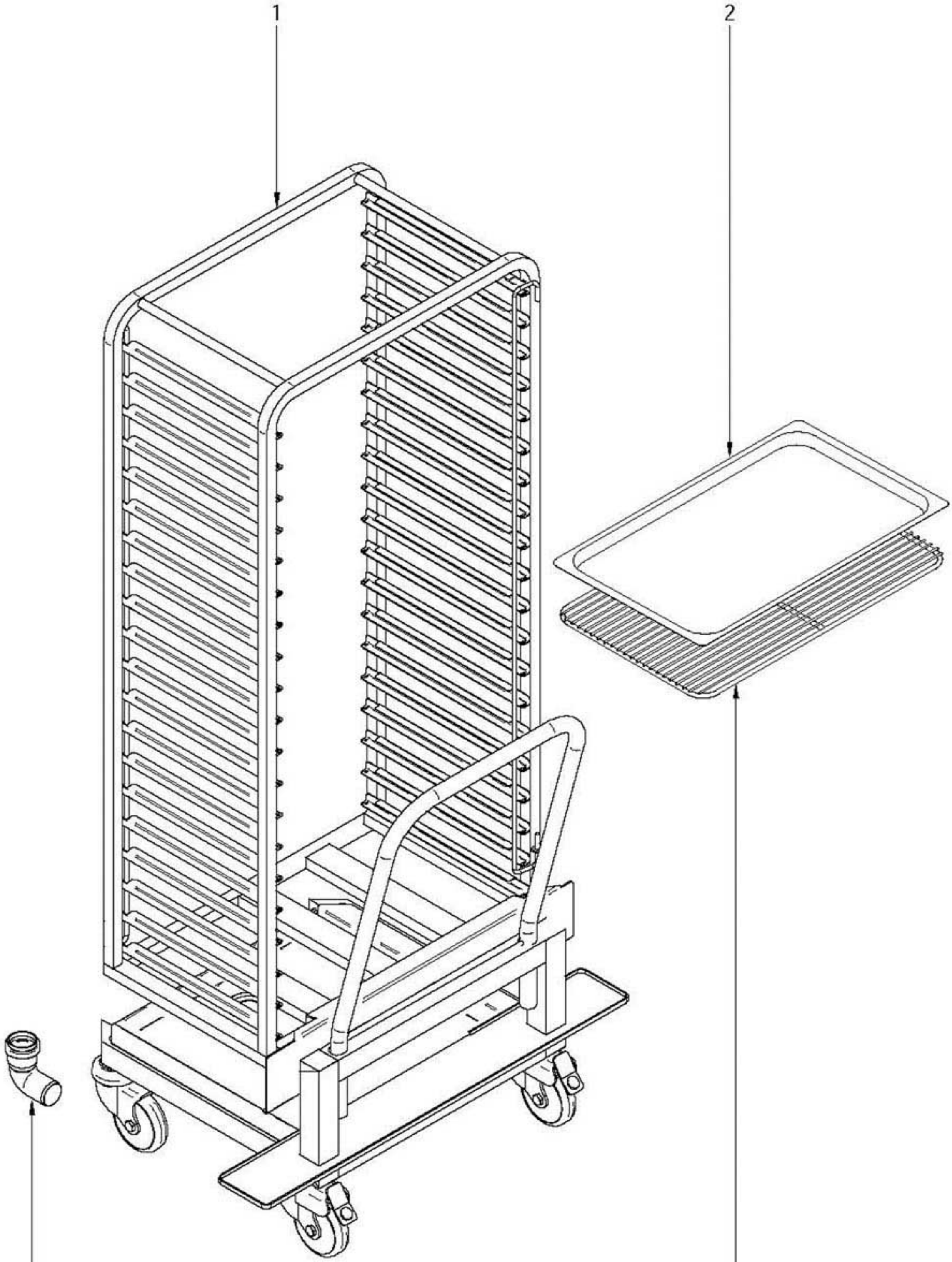


| N plano | Firma | Fecha | Aparato | | Lamina | |
|---|---|---|---|---|---|---|
| C-1950 | | 2007-12 | CARRO<br>HORNOS HEI; HEM; HEP-20/11 | | 4 | Fagor Industrial S.Coop.<br>Onate |

| MOD. | HORNOS | ZONA | CARRO | PLANO | C-1950 |
|---|---|---|---|---|---|

| ITEM | CODIGO | DENOMINACION | TEXTO | HEI 20/11 | HEM 20/11 | HEP 20/11 | | | | | NOTAS |
|---|---|---|---|---|---|---|---|---|---|---|---|
| 1 | R092857000 | CARRO 20/11 | TROLLEY 20/11 | 1 | 1 | 1 | | | | | |
| 2 | R252816000 | BANDEJA 1/1 P:20 | TRAY GN-1/1 h=20 | 1 | 1 | 1 | | | | | |
| 3 | R672665000 | PARRILLA 1X1 (REF. 2025201) | GRILLE 1X1 (REF. 2025201) | 1 | 1 | 1 | | | | | |
| 4 | T492853000 | CODO DESAGÜE CARRO 20/21 | TROLLEY DRAINAGE L-BEND 20/ | 1 | 1 | 1 | | | | | |

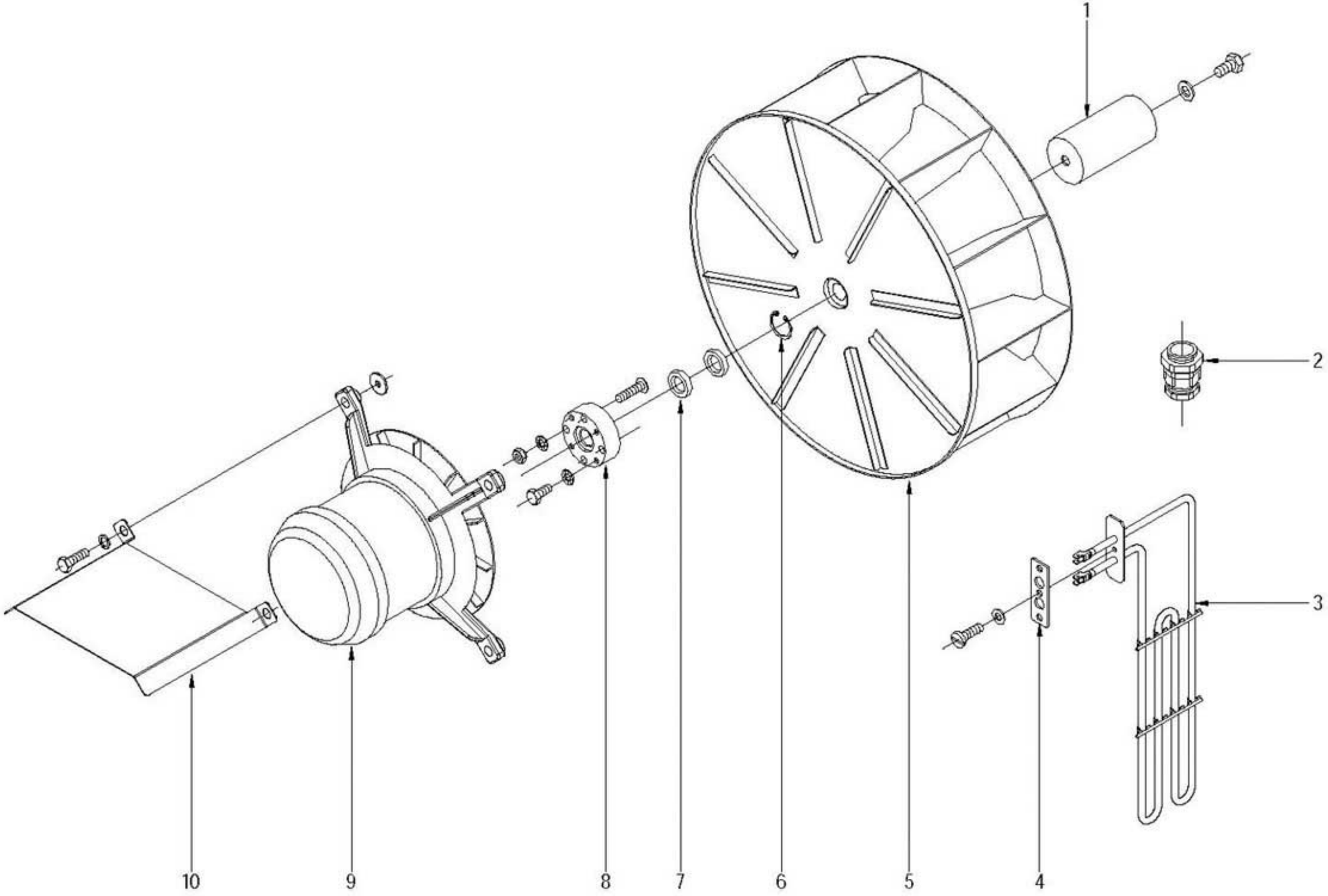


| N plano | Firma | Fecha | Aparato | | Lamina | |
|---|---|---|---|---|---|---|
| C-1951 | | 2007-12 | TUREINA<br>HORNO HEI 20/11 | | 5 | Fagor Industrial S.Coop.<br>Onate |

| MOD. | HORNOS | ZONA | TURBINA | PLANO | C-1951 |
|---|---|---|---|---|---|

| ITEM | CODIGO | DENOMINACION | TEXTO | HEI 20/11 | | | | | | | NOTAS |
|---|---|---|---|---|---|---|---|---|---|---|---|
| 1 | R665025000 | DISTRIBUIDOR INYECTOR | INJECTION DISTRIBUTOR | 2 | | | | | | | |
| 2 | R033002000 | PRENSA ESTOPAS | WIRES PROTECTION | 1 | | | | | | | |
| 3 | R093002000 | RESISTENCIA CONVECCION 23 | ELEMENT 2000+2000W 230V | 6 | | | | | | | |
| 4 | R673063000 | JUNTA RESISTENCIAS 10-11 | ELEMENT SEAL 10-11 | 6 | | | | | | | |
| | Q232040000 | ARANDELA A6 | FLAT WASHER A.6 | 18 | | | | | | | |
| | Q242040000 | ARANDELA ABANICO A6 A.304 | FAN SHAPED WASHER A.6 | 18 | | | | | | | |
| | Q012042000 | TORNILLO EXAGONAL M6x15 | HEXAGONAL BOLT M6x15 | 18 | | | | | | | |
| 5 | R703050000 | TURBINA REC D350X127 HANNING | TURBINE REC D350X127 HANNIN | 2 | | | | | | | |
| | R763010000 | ARANDELA SEGURIDAD HANNING | HANNING SAFETY WASHER | 2 | | | | | | | |
| | Q012063000 | TORNIL. EXAGONAL M10X20 A.304 | HEXAGONAL SCREW M.10x20 | 2 | | | | | | | |
| 6 | Q302023000 | ANILLO DE SEGURIDAD D 28X1.2 | SAFETY RING 28x1,2 | 2 | | | | | | | |
| 7 | R662627000 | RETEN 17X28X7V | RETAINER 28x17x7 | 4 | | | | | | | |
| 8 | R662684000 | CASQUILLO RETEN | SEAL BUSHING | 2 | | | | | | | |
| | R662685000 | JUNTA CASQUILLO RETEN | SEAL BUSHING GASKET | 2 | | | | | | | |
| | Q262040000 | ARANDELA GROW. A6 A.304 | GROWER WASHER A.6 | 8 | | | | | | | |
| | Q162040000 | TUERCA EXAGONAL M6 | HEXAGONAL NUT M.6 | 8 | | | | | | | |
| | Q232040000 | ARANDELA A6 | FLAT WASHER A.6 | 8 | | | | | | | |
| | Q262040000 | ARANDELA GROW. A6 A.304 | GROWER WASHER A.6 | 8 | | | | | | | |
| | Q162040000 | TUERCA EXAGONAL M6 | HEXAGONAL NUT M.6 | 8 | | | | | | | |
| 9 | R703049000 | MOTOR DOBLE GIRO 1VEL.450W. | DOUBLE ROTATION MOTOR 1VE | 2 | | | | | | | |
| | Q012046000 | TORN.EXA. M6X40 A.304 | HEXAGONAL SCREW M.6x40 | 8 | | | | | | | |
| | Q242050000 | ARANDELA ABANICO A8 A.304 | FAN SHAPED WASHER A.8 | 8 | | | | | | | |
| | Q162050000 | TUERCA EXAGONAL M8x1 INOX. | HEXAGONAL NUT M.8x1 | 8 | | | | | | | |
| 10 | T142635000 | TEJADILLO MOTOR | MOTOR ROOF | 2 | | | | | | | |
| | | | | | | | | | | | |
| | | | | | | | | | | | |
| | | | | | | | | | | | |
| | | | | | | | | | | | |
| | | | | | | | | | | | |
| | | | | | | | | | | | |
| | | | | | | | | | | | |

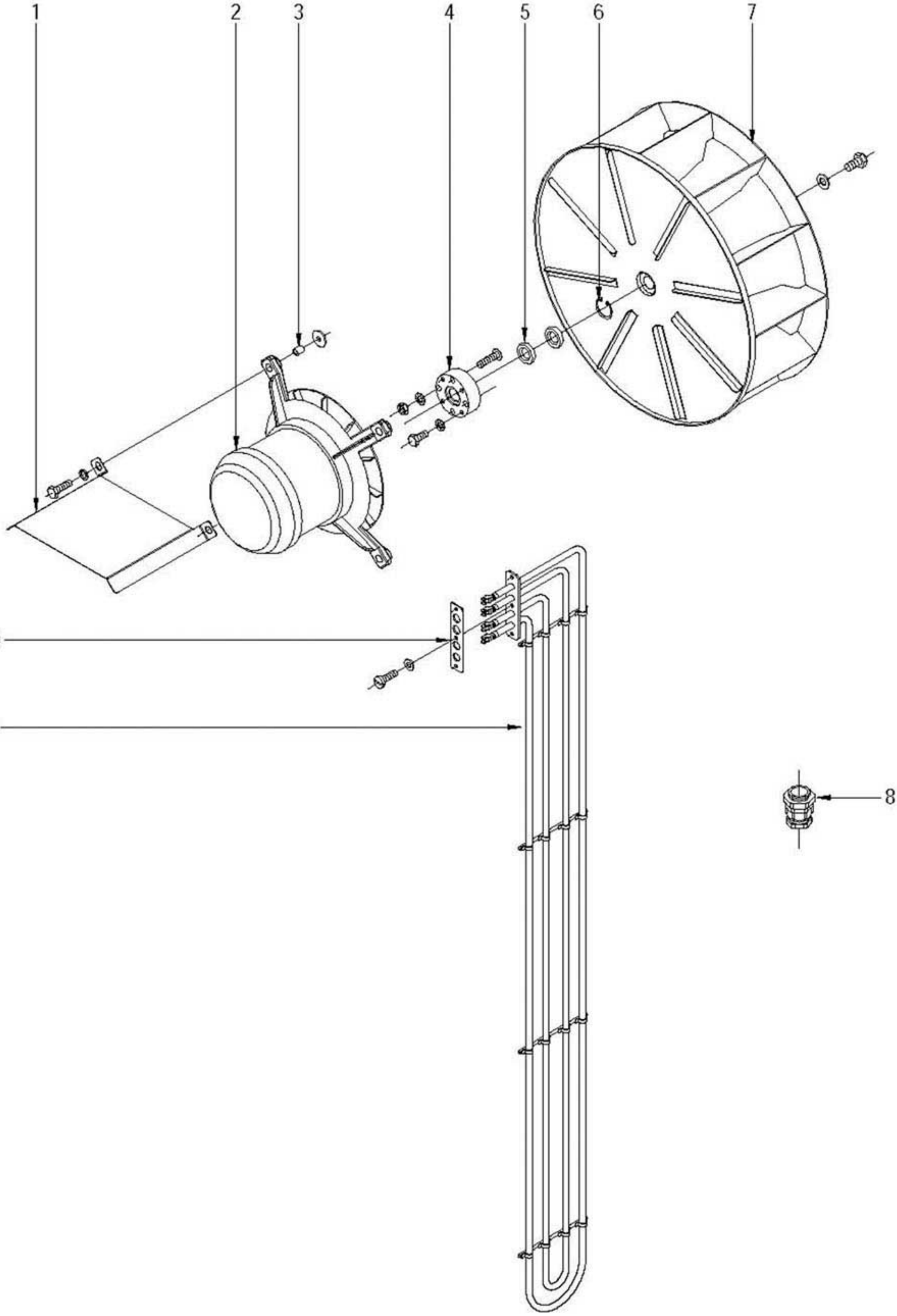


| N plano | Firma | Fecha | Aparato | Lamina | |
|---|---|---|---|---|---|
| C-1952 | | 2007-12 | TURBINA<br>HORNOS HEM; HEP-20/11 | 6 | Fagor Industrial S.Coop. FAGOR<br>Onate |

| MOD. | HORNOS | ZONA | TURBINA | PLANO | C-1952 |
|---|---|---|---|---|---|

| ITEM | CODIGO | DENOMINACION | TEXTO | HEM 20/11 | HEP 20/11 | | | | | | NOTAS |
|---|---|---|---|---|---|---|---|---|---|---|---|
| 1 | T142635000 | TEJADILLO MOTOR | MOTOR ROOF | 2 | 2 | | | | | | |
| 2 | T493003000 | MOTOR 20/21 2V 400V | MOTOR 20/21 2 SPEED 400V | 2 | 2 | | | | | | |
| 2 | T493004000 | MOTOR 20/21 2V 230V. | MOTOR 20/21 2V 230V. | 2 | 2 | | | | | | |
| | Q012046000 | TORN.EXA. M6X40 A.304 | HEXAGONAL SCREW M.6x40 | 8 | 8 | | | | | | |
| | Q242050000 | ARANDELA ABANICO A8 A.304 | FAN SHAPED WASHER A.8 | 8 | 8 | | | | | | |
| | Q162050000 | TUERCA EXAGONAL M8x1 INOX. | HEXAGONAL NUT M.8x1 | 8 | 8 | | | | | | |
| 3 | R663057000 | CASQUILLO AMARRE MOTOR | CAP RETAINER | 8 | 8 | | | | | | |
| | Q301304000 | ARANDELA PLANA 23X6.5X2 | FLAT WASHER 23X6.5X2 | 8 | 8 | | | | | | |
| 4 | R662684000 | CASQUILLO RETEN | SEAL BUSHING | 2 | 2 | | | | | | |
| | R662685000 | JUNTA CASQUILLO RETEN | SEAL BUSHING GASKET | 2 | 2 | | | | | | |
| | Q262040000 | ARANDELA GROW. A6 A.304 | GROWER WASHER A.6 | 8 | 8 | | | | | | |
| | Q162040000 | TUERCA EXAGONAL M6 | HEXAGONAL NUT M.6 | 8 | 8 | | | | | | |
| | Q232040000 | ARANDELA A6 | FLAT WASHER A.6 | 8 | 8 | | | | | | |
| | Q262040000 | ARANDELA GROW. A6 A.304 | GROWER WASHER A.6 | 8 | 8 | | | | | | |
| | Q162040000 | TUERCA EXAGONAL M6 | HEXAGONAL NUT M.6 | 8 | 8 | | | | | | |
| 5 | R662627000 | RETEN 17X28X7V | RETAINER 28x17x7 | 4 | 4 | | | | | | |
| 6 | Q302023000 | ANILLO DE SEGURIDAD D 28X1.2 | SAFETY RING 28x1,2 | 2 | 2 | | | | | | |
| 7 | T493017000 | TURBINA RECTA D350X127 FIR | STRAIGHT FAN D350X127 FIR | 2 | 2 | | | | | | |
| | R763010000 | ARANDELA SEGURIDAD HANNING | HANNING SAFETY WASHER | 2 | 2 | | | | | | |
| | Q012063000 | TORNIL. EXAGONAL M10X20 A.304 | HEXAGONAL SCREW M.10x20 | 2 | 2 | | | | | | |
| 8 | R033002000 | PRENSA ESTOPAS | WIRES PROTECTION | 1 | 1 | | | | | | |
| 9 | R093002000 | RESISTENCIA CONVECCION 23 | ELEMENT 2000+2000W 230V | 6 | 6 | | | | | | |
| 10 | R673063000 | JUNTA RESISTENCIAS 10-11 | ELEMENT SEAL 10-11 | 6 | 6 | | | | | | |
| | Q232040000 | ARANDELA A6 | FLAT WASHER A.6 | 18 | 18 | | | | | | |
| | Q242040000 | ARANDELA ABANICO A6 A.304 | FAN SHAPED WASHER A.6 | 18 | 18 | | | | | | |
| | Q012042000 | TORNILLO EXAGONAL M6x15 | HEXAGONAL BOLT M6x15 | 18 | 18 | | | | | | |
| | | | | | | | | | | | |
| | | | | | | | | | | | |
| | | | | | | | | | | | |
| | | | | | | | | | | | |
| | | | | | | | | | | | |

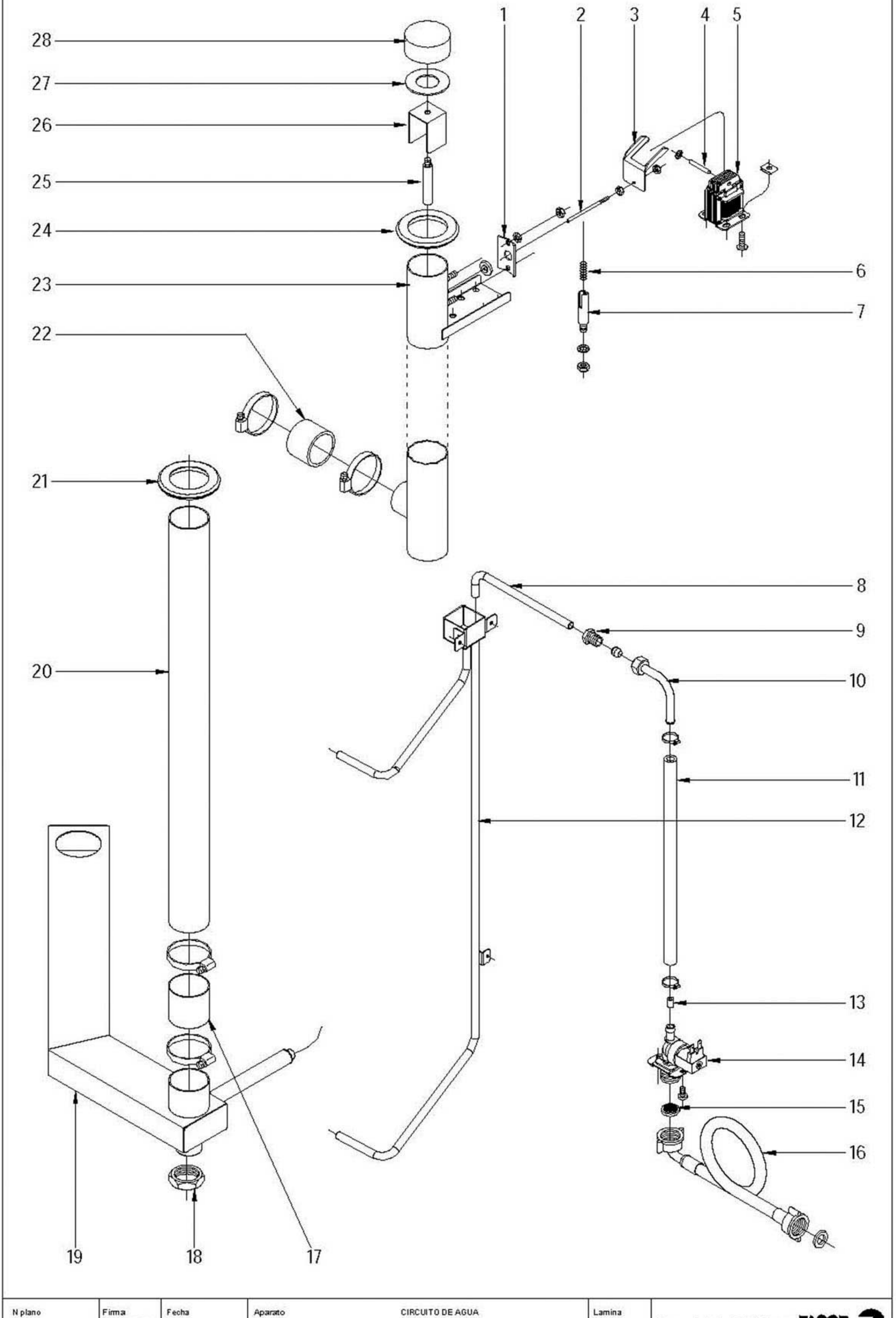


| N plano | Firma | Fecha | Aparato | Lamina | |
|---|---|---|---|---|---|
| C-1953 | | 2007-12 | CIRCUITO DE AGUA<br>HORNO HEI 20/11 | 7 | Fagor Industrial S.Coop.<br>Oñate |

| MOD. | HORNOS | ZONA | CIRCUITO DE AGUA | PLANO | C-1953 |
|---|---|---|---|---|---|

| ITEM | CODIGO | DENOMINACION | TEXTO | HEI 20/11 | | | | | | | NOTAS |
|---|---|---|---|---|---|---|---|---|---|---|---|
| 1 | T115105000 | AMARRE CONDUCCION VAHOS | VAPOUR DUCT FASTENING | 1 | | | | | | | |
| | R675033000 | JUNTA PALANCA ACCIONAMIENTO | JOINT | 1 | | | | | | | |
| | Q242030000 | ARANDELA ABANICO A5 A.304 | FAN SHAPED WASHER A.5 | 2 | | | | | | | |
| | Q162030000 | TUERCA EXAGONAL M5 | HEXAGONAL NUT M.5 | 2 | | | | | | | |
| 2 | R675014000 | PALANCA ACCIONAMIENTO | MOVING ROD | 1 | | | | | | | |
| 3 | R672640000 | ESCUADRA ACCIONAMIENTO | MOVING STEEL ANGLE | 1 | | | | | | | |
| | Q162020000 | TUERCA EXAGONAL M4 | HEXAGONAL NUT M.4 | 2 | | | | | | | |
| | Q242020000 | ARANDELA ABANICO A4 A.304 | FAN SHAPED WASHER A.4 | 1 | | | | | | | |
| 4 | R675016000 | PASADOR ELECTROIMAN | PIN | 1 | | | | | | | |
| 5 | R663030000 | ELECTROIMAN JOVE TIPO 501 | ELECTROMAGNETIC | 1 | | | | | | | |
| | Q221009000 | TUERCA RAPIDA SEGURID. AC.RE | NUT M.5 | 2 | | | | | | | |
| | Q152004000 | TORNILLO APLAST. M5X13 A 304 | FLAT SCREW M.5x13 | 2 | | | | | | | |
| 6 | Z883001000 | RESORTE 20153 | SPRING | 1 | | | | | | | |
| 7 | R665027000 | GUIA RESORTE | PIN | 1 | | | | | | | |
| | Q242040000 | ARANDELA ABANICO A6 A.304 | FAN SHAPED WASHER A.6 | 1 | | | | | | | |
| | Q162040000 | TUERCA EXAGONAL M6 | HEXAGONAL NUT M.6 | 1 | | | | | | | |
| 8 | R095010000 | TUBO ENTRADA INYECTOR | INJECTOR INPUT PIPE | 1 | | | | | | | |
| 9 | R695003000 | MANGUITO CIERRE | CLOSING SLEEVE | 1 | | | | | | | |
| | R695004000 | BICONO | BICONE | 1 | | | | | | | |
| 10 | R695017000 | TUBO CONDUCCION AGUA | COMPLETE WATER CONDUCTIO | 1 | | | | | | | |
| 11 | 3676900000 | TUBO GOMA NEGRA Ø17*10 | BLACK RUBBER PIPE Ø17*10 | 1 | | | | | | | |
| | Q881302000 | ABRAZADERA ELASTICA 12*20 | CLAMP 12-20 | 2 | | | | | | | |
| 12 | R095013000 | INYECTOR COMPLETO HEI 20/11 | COMPLETE INJECTOR HEI 20/11 | 1 | | | | | | | |
| | Q412002000 | REMACHE AVINOX Ø4x10MM | TUBULAR RIVET 4x7,5 | 3 | | | | | | | |
| 13 | R665041000 | REGULADOR 0,25L. ROJO | FLOW REGULATOR 0,25 l/min (PI | 1 | | | | | | | |
| 14 | Z701135000 | E.V.SIMP.220V COD.255.208 | INLET VALVE 230 V. | 1 | | | | | | | |
| | Q032021000 | TORNILLO ALOMADO M4x10 | CURVED SCREW M.4x10 | 4 | | | | | | | |
| 15 | Z701132000 | FILTRO DE JUNTA N-3 | FILTER JOINT | 1 | | | | | | | |
| 16 | Z601114000 | MANGUERA ENTRADA AGUA | WATER INLET HOSE | 1 | | | | | | | |
| 17 | R345020000 | TUBO EMPALME GENERADOR | GENERATOR COUPLING TUBING | 1 | | | | | | | |
| | Q881307000 | ABRAZADERA 40-60 | CLAMP 40-60 | 2 | | | | | | | |

| MOD. | HORNOS | ZONA | CIRCUITO DE AGUA | PLANO | C-1953 |
|---|---|---|---|---|---|

| ITEM | CODIGO | DENOMINACION | TEXTO | HEI 20/11 | | | | | | | NOTAS |
|---|---|---|---|---|---|---|---|---|---|---|---|
| 18 | Q223014000 | CONTRATUERCA 1 LATON | LOCK NUT 1 PUL | 1 | | | | | | | |
| 19 | ---------- | TUBO DESA. (CUERPO INTERIOR) | DRAIN PIPE. (INNER BODY) | 1 | | | | | | | |
| 20 | R095014000 | CHIMENEA COMPLETA 20/11E | CHIMNEY | 1 | | | | | | | |
| 21 | R662813000 | PASAMUROS CHIMENEA 101003361 | FEEDTHROUGH FLUE PIPE 1010 | 1 | | | | | | | |
| 22 | 3715800000 | TUBO SILICONA Ø43*51 | SILICONE TUBE Ø43*51 | 1 | | | | | | | |
| | Q881307000 | ABRAZADERA 40-60 | CLAMP 40-60 | 2 | | | | | | | |
| 23 | R695008000 | CONJUNTO CHIMENEA HMI | COMPLETE CHIMNEY | 1 | | | | | | | |
| 24 | R662813000 | PASAMUROS CHIMENEA 101003361 | FEEDTHROUGH FLUE PIPE 1010 | 1 | | | | | | | |
| 25 | R675008000 | UNION RETENCION VAPORES | MOVING ROD CHIMNEY | 1 | | | | | | | |
| 26 | R675005000 | GUIA RETENCION VAPORES | MOVING GUIDE | 1 | | | | | | | |
| 27 | R675007000 | JUNTA RETENCION VAPORES | RUBBER SEAL | 1 | | | | | | | |
| 28 | R675006000 | RETENCION DE VAPORES | CLOSE CHIMNEY | 1 | | | | | | | |

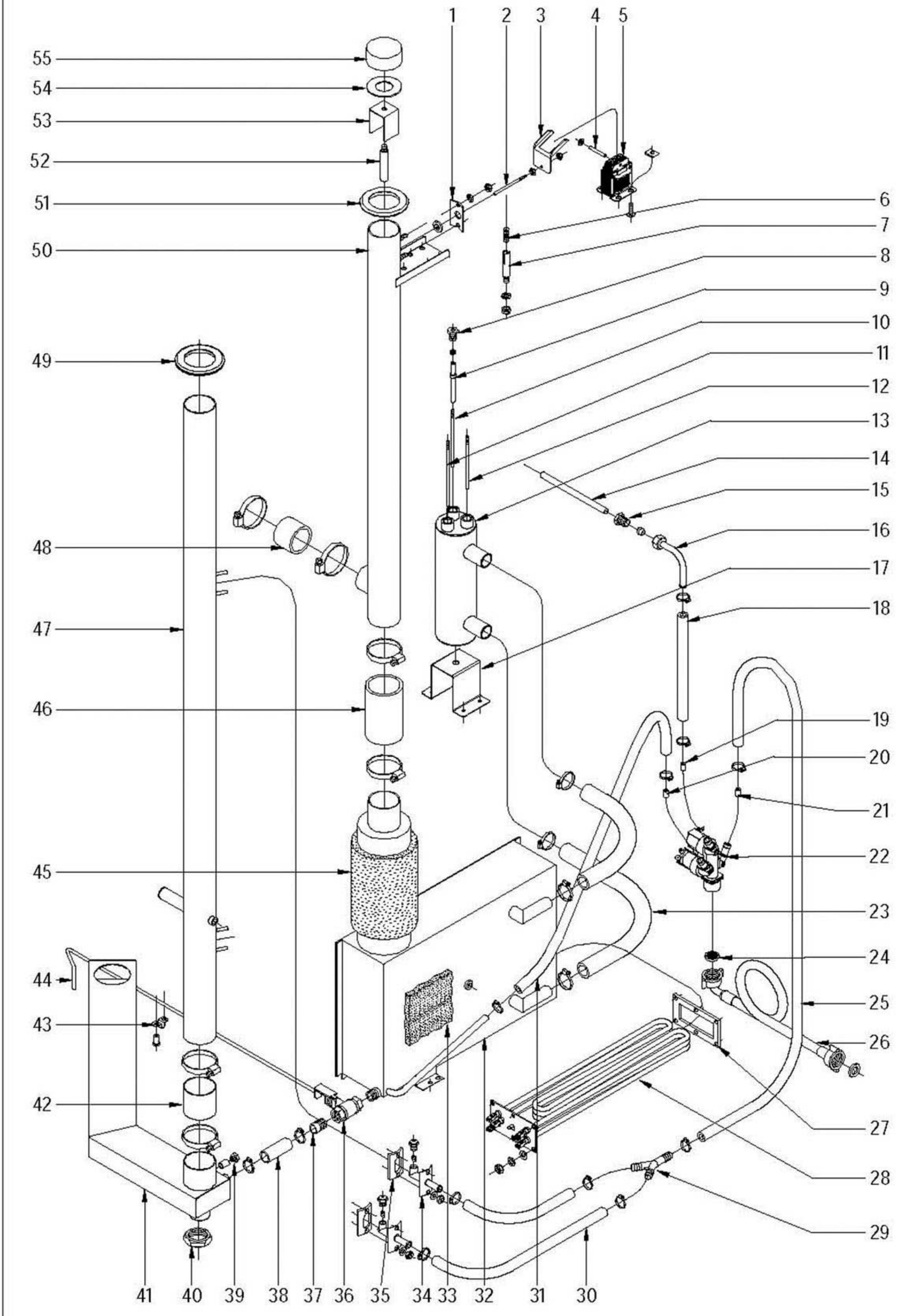


| N plano | Firma | Fecha | Aparato | Lamina | |
|---|---|---|---|---|---|
| C-1954 | | 2007-12 | CIRCUITO DE AGUA<br>HORNOS HEM; HEP-20/11 | 8 | Fagor Industrial S.Coop. FAGOR<br>Onate |

| MOD. | HORNOS | ZONA | CIRCUITO DE AGUA | PLANO | C-1954 |
|---|---|---|---|---|---|

| ITEM | CODIGO | DENOMINACION | TEXTO | HEM 20/11 | HEP 20/11 | | | | | | NOTAS |
|---|---|---|---|---|---|---|---|---|---|---|---|
| 1 | T115105000 | AMARRE CONDUCCION VAHOS | VAPOUR DUCT FASTENING | 1 | 1 | | | | | | |
| | R675033000 | JUNTA PALANCA ACCIONAMIENTO | JOINT | 1 | 1 | | | | | | |
| | Q242030000 | ARANDELA ABANICO A5 A.304 | FAN SHAPED WASHER A.5 | 2 | 2 | | | | | | |
| | Q162030000 | TUERCA EXAGONAL M5 | HEXAGONAL NUT M.5 | 2 | 2 | | | | | | |
| 2 | R675014000 | PALANCA ACCIONAMIENTO | MOVING ROD | 1 | 1 | | | | | | |
| 3 | R672640000 | ESCUADRA ACCIONAMIENTO | MOVING STEEL ANGLE | 1 | 1 | | | | | | |
| | Q162020000 | TUERCA EXAGONAL M4 | HEXAGONAL NUT M.4 | 2 | 2 | | | | | | |
| | Q242020000 | ARANDELA ABANICO A4 A.304 | FAN SHAPED WASHER A.4 | 1 | 1 | | | | | | |
| 4 | R675016000 | PASADOR ELECTROIMAN | PIN | 1 | 1 | | | | | | |
| 5 | R663030000 | ELECTROIMAN JOVE TIPO 501 | ELECTROMAGNETIC | 1 | 1 | | | | | | |
| | Q221009000 | TUERCA RAPIDA SEGURID. AC.RE | NUT M.5 | 2 | 2 | | | | | | |
| | Q152004000 | TORNILLO APLAST. M5X13 A 304 | FLAT SCREW M.5x13 | 2 | 2 | | | | | | |
| 6 | Z883001000 | RESORTE 20153 | SPRING | 1 | 1 | | | | | | |
| 7 | R665027000 | GUIA RESORTE | PIN | 1 | 1 | | | | | | |
| | Q242040000 | ARANDELA ABANICO A6 A.304 | FAN SHAPED WASHER A.6 | 1 | 1 | | | | | | |
| | Q162040000 | TUERCA EXAGONAL M6 | HEXAGONAL NUT M.6 | 1 | 1 | | | | | | |
| 8 | R345058000 | RACORD | ELECTRODES ANCHORING ADAI | 3 | 3 | | | | | | |
| | Q163020000 | TUERCA EXAGONAL M4 | HEXAGONAL NUT M.4 | 6 | 6 | | | | | | |
| 9 | R345059000 | GUIA AISLANTE | ELECTRODE INSULATOR GUIDE | 3 | 3 | | | | | | |
| 10 | R345063000 | ELECTRODO NIVEL BAJO | LOW LEVEL ELECTRODE | 1 | 1 | | | | | | |
| 11 | R345064000 | ELECTRODO DE MASA | EARTH ELECTRODE L=131 | 1 | 1 | | | | | | |
| 12 | R345060000 | ELECTRODO NIVEL ALTO | HIGH LEVEL ELECTRODE | 1 | 1 | | | | | | |
| 13 | T325040000 | CUERPO NIVELES COMPLETO | COMPLETE LEVELS BODY | 1 | 1 | | | | | | |
| | Q232040000 | ARANDELA A6 | FLAT WASHER A.6 | 1 | 1 | | | | | | |
| | Q262040000 | ARANDELA GROW. A6 A.304 | GROWER WASHER A.6 | 1 | 1 | | | | | | |
| | Q162040000 | TUERCA EXAGONAL M6 | HEXAGONAL NUT M.6 | 2 | 2 | | | | | | |
| 14 | R665024000 | TUBO CONDUCCION INYECTOR | INJECTOR CONDUCTION TUBINC | 1 | 1 | | | | | | |
| 15 | R695003000 | MANGUITO CIERRE | CLOSING SLEEVE | 1 | 1 | | | | | | |
| | R695004000 | BICONO | BICONE | 1 | 1 | | | | | | |
| 16 | R695017000 | TUBO CONDUCCION AGUA | COMPLETE WATER CONDUCTIO | 1 | 1 | | | | | | |
| 17 | R025032000 | CHAPA CUERPO NIVELES E102011 | PLATE BODY LEVELS E102011 | 1 | 1 | | | | | | |

| MOD. | HORNOS | ZONA | CIRCUITO DE AGUA | PLANO | C-1954 |
|---|---|---|---|---|---|

| ITEM | CODIGO | DENOMINACION | TEXTO | HEM 20/11 | HEP 20/11 | | | | | | NOTAS |
|---|---|---|---|---|---|---|---|---|---|---|---|
| 18 | 3676900000 | TUBO GOMA NEGRA Ø17*10 | BLACK RUBBER PIPE Ø17*10 | 1 | 1 | | | | | | |
| | Q881302000 | ABRAZADERA ELASTICA 12*20 | CLAMP 12-20 | 2 | 2 | | | | | | |
| 19 | R665041000 | REGULADOR 0,25L. ROJO | FLOW REGULATOR 0,25 l/min (Pl | 1 | 1 | | | | | | |
| 20 | P443042000 | REGULADOR 3L. VERDE 254.023 | FLOW REDUCER 3 l/min (BLACK) | 1 | 1 | | | | | | |
| 21 | Z601156000 | REGULADOR 8L RO. 254.034 | FLOW REDUCER 8 l/min (RED) | 1 | 1 | | | | | | |
| 22 | Z611123000 | E.V. TRIPLE COD.255.641 | ELECTROVALVE | 1 | 1 | | | | | | |
| | Q032021000 | TORNILLO ALOMADO M4x10 | CURVED SCREW M.4x10 | 4 | 4 | | | | | | |
| 23 | 3715600000 | TUBO SILICONA FORRADO 26X18 | LINED SILICONE TUBE 26X18 | 2 | 2 | | | | | | |
| | Q881305000 | ABRAZADERA 25-40 | CLAMP 25-40 | 4 | 4 | | | | | | |
| 24 | Z701132000 | FILTRO DE JUNTA N-3 | FILTER JOINT | 2 | 2 | | | | | | |
| 25 | 3676900000 | TUBO GOMA NEGRA Ø17*10 | BLACK RUBBER PIPE Ø17*10 | 1 | 1 | | | | | | |
| | Q881302000 | ABRAZADERA ELASTICA 12*20 | CLAMP 12-20 | 2 | 2 | | | | | | |
| 26 | Z601114000 | MANGUERA ENTRADA AGUA | WATER INLET HOSE | 1 | 1 | | | | | | |
| 27 | R145012000 | JUNTA CIERRE RESISTENCIAS | JOINT | 2 | 2 | | | | | | |
| 28 | R143000000 | RESISTENCIA 3000WX3 | HEATING ELEMENT 3000W.x3 23 | 2 | 2 | | | | | | |
| | Q163030000 | TUERCA EXAGONAL M5 LATON | HEXAGONAL NUT M.5 | 12 | 12 | | | | | | |
| | Q242030000 | ARANDELA ABANICO A5 A.304 | FAN SHAPED WASHER A.5 | 12 | 12 | | | | | | |
| 29 | Z201106000 | RACORD EN Y | UNION "Y" | 1 | 1 | | | | | | |
| 30 | 3676900000 | TUBO GOMA NEGRA Ø17*10 | BLACK RUBBER PIPE Ø17*10 | 2 | 2 | | | | | | |
| | Q881302000 | ABRAZADERA ELASTICA 12*20 | CLAMP 12-20 | 4 | 4 | | | | | | |
| 31 | 3676900000 | TUBO GOMA NEGRA Ø17*10 | BLACK RUBBER PIPE Ø17*10 | 2 | 2 | | | | | | |
| | Q881302000 | ABRAZADERA ELASTICA 12*20 | CLAMP 12-20 | 4 | 4 | | | | | | |
| 32 | R675024000 | GENERADOR DE VAPOR 20/11 | STEAM BOILER | 1 | 1 | | | | | | |
| 33 | R345011000 | AISLANTE GENERADOR E-10-20/11 | FRONT INSULATION BOILER | 1 | 1 | | | | | | |
| 34 | R015007000 | CONDUCCION VAHOS COMPLETO | CONNECTION | 2 | 2 | | | | | | |
| | Z651931000 | TOBERA ACLARADO | INJECTOR | 2 | 2 | | | | | | |
| | Z651932000 | RODETE | RUNNER | 2 | 2 | | | | | | |
| | Q162030000 | TUERCA EXAGONAL M5 | HEXAGONAL NUT M.5 | 2 | 2 | | | | | | |
| | Q242030000 | ARANDELA ABANICO A5 A.304 | FAN SHAPED WASHER A.5 | 2 | 2 | | | | | | |
| 35 | R345108000 | JUNTA DE VAHOS 5102805 | JOINT | 2 | 2 | | | | | | |
| 36 | R015034000 | CUERPO GRIFO VACIADO | BOILER DRAIN TAP | 1 | 1 | | | | | | |

| MOD. | HORNOS | ZONA | CIRCUITO DE AGUA | PLANO | C-1954 |
|---|---|---|---|---|---|

| ITEM | CODIGO | DENOMINACION | TEXTO | HEM 20/11 | HEP 20/11 | | | | | | NOTAS |
|---|---|---|---|---|---|---|---|---|---|---|---|
| 37 | R345014000 | MANGUITO GRIFO VACIADO | EMPTYING TAP SLEEVE | 1 | 1 | | | | | | |
| | Q881304000 | ABRAZADERA 20-32 | CLAMP 20-32 | 2 | 2 | | | | | | |
| 38 | 3715600000 | TUBO SILICONA 26X18 | SILICONE PIPE 26X18 | 1 | 1 | | | | | | |
| | Q881305000 | ABRAZADERA 25-40 | CLAMP 25-40 | 4 | 4 | | | | | | |
| 39 | R662629000 | RACORD CIERRE SONDA | PROBE CLOSING ADAPTOR | 1 | 1 | | | | | | |
| | 3712400000 | TUBO SILICONA NEGRO D 8*3 | BLACK SILICONE PIPE D 8*3 | 1 | 1 | | | | | | |
| 40 | Q223014000 | CONTRATUERCA 1 LATON | LOCK NUT 1 PUL | 1 | 1 | | | | | | |
| 41 | ---------- | TUBO DESA. (CUERPO INTERIOR) | DRAIN PIPE. (INNER BODY) | 1 | 1 | | | | | | |
| 42 | R345020000 | TUBO EMPALME GENERADOR | GENERATOR COUPLING TUBING | 1 | 1 | | | | | | |
| | Q881307000 | ABRAZADERA 40-60 | CLAMP 40-60 | 2 | 2 | | | | | | |
| 43 | Q901306000 | GRAPA METALICA DOS PIES | TAP HANDLE FASTENING | 1 | 1 | | | | | | |
| | Q412002000 | REMACHE AVINOX Ø4x10mm | TUBULAR RIVET 4x7,5 | 2 | 2 | | | | | | |
| 44 | R342803000 | PALANCA GRIFO VACIADO | DRAIN TAP LEVER | 1 | 1 | | | | | | |
| 45 | T115066000 | AISLANTE CHIMENEA 10-20/11 | FLUE PIPE INSULATION 10-20/11 | 1 | 1 | | | | | | |
| 46 | R345020000 | TUBO EMPALME GENERADOR | GENERATOR COUPLING TUBING | 1 | 1 | | | | | | |
| | Q881307000 | ABRAZADERA 40-60 | CLAMP 40-60 | 2 | 2 | | | | | | |
| 47 | R675043000 | CHIMENEA COMPLETA 20/11E | COMPLETE FLUE PIPE 20/11E | 1 | 1 | | | | | | |
| 48 | 3715800000 | TUBO SILICONA Ø43*51 | SILICONE TUBE Ø43*51 | 1 | 1 | | | | | | |
| | Q881307000 | ABRAZADERA 40-60 | CLAMP 40-60 | 2 | 2 | | | | | | |
| 49 | R662813000 | PASAMUROS CHIMENEA 101003361 | FEEDTHROUGH FLUE PIPE 1010 | 1 | 1 | | | | | | |
| 50 | R095004000 | CHIMENEA COMPLETA 20/11 E-M-P | COMPLETE CHIMNEY | 1 | 1 | | | | | | |
| 51 | R662813000 | PASAMUROS CHIMENEA 101003361 | FEEDTHROUGH FLUE PIPE 1010 | 1 | 1 | | | | | | |
| 52 | R675008000 | UNION RETENCION VAPORES | MOVING ROD CHIMNEY | 1 | 1 | | | | | | |
| 53 | R675005000 | GUIA RETENCION VAPORES | MOVING GUIDE | 1 | 1 | | | | | | |
| 54 | R675007000 | JUNTA RETENCION VAPORES | RUBBER SEAL | 1 | 1 | | | | | | |
| 55 | R675006000 | RETENCION DE VAPORES | CLOSE CHIMNEY | 1 | 1 | | | | | | |
| | | | | | | | | | | | |
| | | | | | | | | | | | |
| | | | | | | | | | | | |
| | | | | | | | | | | | |
| | | | | | | | | | | | |

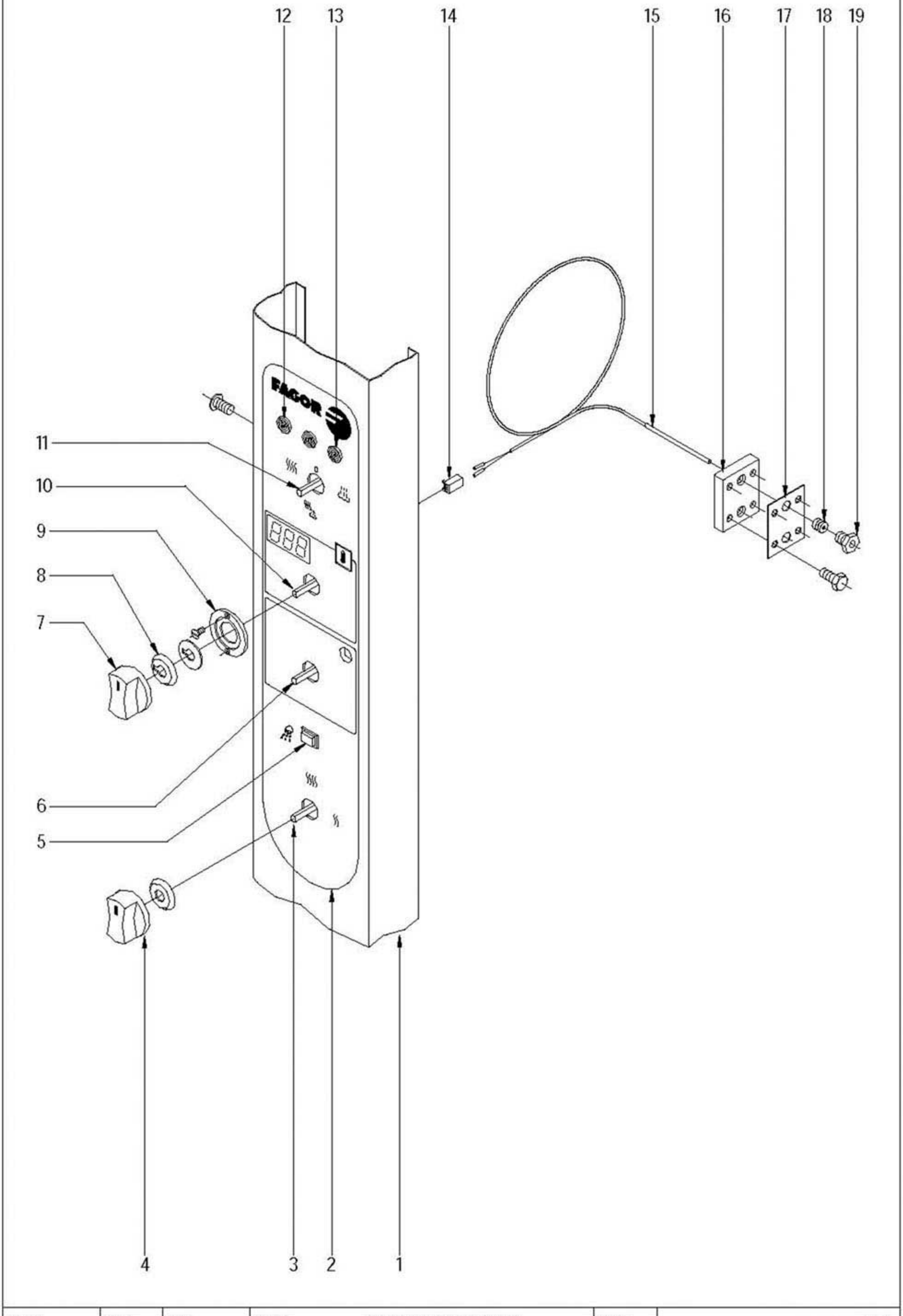


| N plano | Firma | Fecha | Aparato | | Lamina | |
|---|---|---|---|---|---|---|
| C-1955 | | 2007-12 | SISTEMA ELECTRICO PORTAMANDOS | HORNO HEI-20/11 | 9 | Fagor Industrial S.Coop. FAGOR Onate |

| MOD. | HORNOS | ZONA | PARTE ELECTRICA PORTAMANDOS | PLANO | C-1955 |
|---|---|---|---|---|---|

| ITEM | CODIGO | DENOMINACION | TEXTO | HEI 20/11 | | | | | | | NOTAS |
|---|---|---|---|---|---|---|---|---|---|---|---|
| 1 | T102817000 | PANEL PORTAMANDOS HGC-20/11 | CONTROL PANEL | 1 | | | | | | | |
| | Q152004000 | TORNILLO APLAST. M5X13 A 304 | FLAT SCREW M.5x13 | 3 | | | | | | | |
| | R692806000 | SOPORTE COMPONENTES HMI | SUPPORT | 1 | | | | | | | |
| | R663036000 | FIJACION CIRCUITO | CIRCUIT BINDINGS | 4 | | | | | | | |
| | R693011000 | RESISTENCIA 1K8 4W | HEATING ELEMENT 1K8 (4KW) | 1 | | | | | | | |
| 2 | R703042000 | SERIGRAFIA HEI-10/11 | SERIGRAPHY HEI-10 / 11 | 1 | | | | | | | |
| 3 | R753000000 | CONMUTADOR DE POTENCIA | POWER SWITCH | 1 | | | | | | | |
| 4 | R663062000 | BOTÓN DE MANDO COMPLETO | COMPLETE CONTROL BUTTON | 3 | | | | | | | |
| | R663046000 | JUNTA CONMUTADOR | SWITCH JOINT | 3 | | | | | | | |
| 5 | R663032000 | PULSADOR L41M8M959F | PUSH BUTTON | 1 | | | | | | | |
| 6 | R723000000 | TEMPORIZADOR MANUAL | TIMER | 1 | | | | | | | |
| 7 | R663063000 | BOTÓN DE MANDO COMPLETO | KNOB ELECTRONIC | 1 | | | | | | | |
| 8 | R663045000 | JUNTA POTENCIOMETRO | RUBBER SEAL | 1 | | | | | | | |
| | R662810000 | ARANDELA GUIA | GUIDE WASHER | 1 | | | | | | | |
| 9 | R662809000 | GUIA BOTON DE MANDO | KNOB GUIDE | 1 | | | | | | | |
| | Q151346000 | TORNILLO AVELLANADO M3x5 | BOLT M.3x5 | 2 | | | | | | | |
| 10 | R743013000 | TERMOSTATO ELECTRONICO 270ºC | THERMOSTAT 0-270ºC | 1 | | | | | | | |
| 11 | R693004000 | CONMUTADOR DE FUNCIONES | SWITCH | 1 | | | | | | | |
| 12 | R693056000 | PILOTO AMBAR 41227000A4 | AMBAR PILOT 41227000A4 | 2 | | | | | | | |
| 13 | R693055000 | PILOTO VERDE 41227000C7 | GREEN PILOT 41227000C7 | 1 | | | | | | | |
| 14 | R663092000 | CONECTOR 2 VIAS | 2-WAY CONNECTOR | 1 | | | | | | | |
| 15 | R663090000 | CONJUNTO TERMOPAR | THERMOCOUPLE SET | 1 | | | | | | | |
| 16 | R662659000 | APOYO RACORD SONDA | PROBE RACORD SUPPORT | 1 | | | | | | | |
| 17 | R692811000 | JUNTA PASAMUROS DOBLE | DOUBLE FEEDTHROUGH GASKE | 1 | | | | | | | |
| 18 | R662652000 | BICONO CIERRE SONDA | PROBE CLOSING BICONE | 1 | | | | | | | |
| 19 | R662629000 | RACORD CIERRE SONDA | PROBE CLOSING ADAPTOR | 1 | | | | | | | |
| | Q032021000 | TORNILLO ALOMADO M4X10 | CURVED SCREW M.4x10 | 4 | | | | | | | |
| | Q232020000 | ARANDELA A-4 | FLAT WASHER A.4 | 4 | | | | | | | |
| | | | | | | | | | | | |
| | | | | | | | | | | | |
| | | | | | | | | | | | |

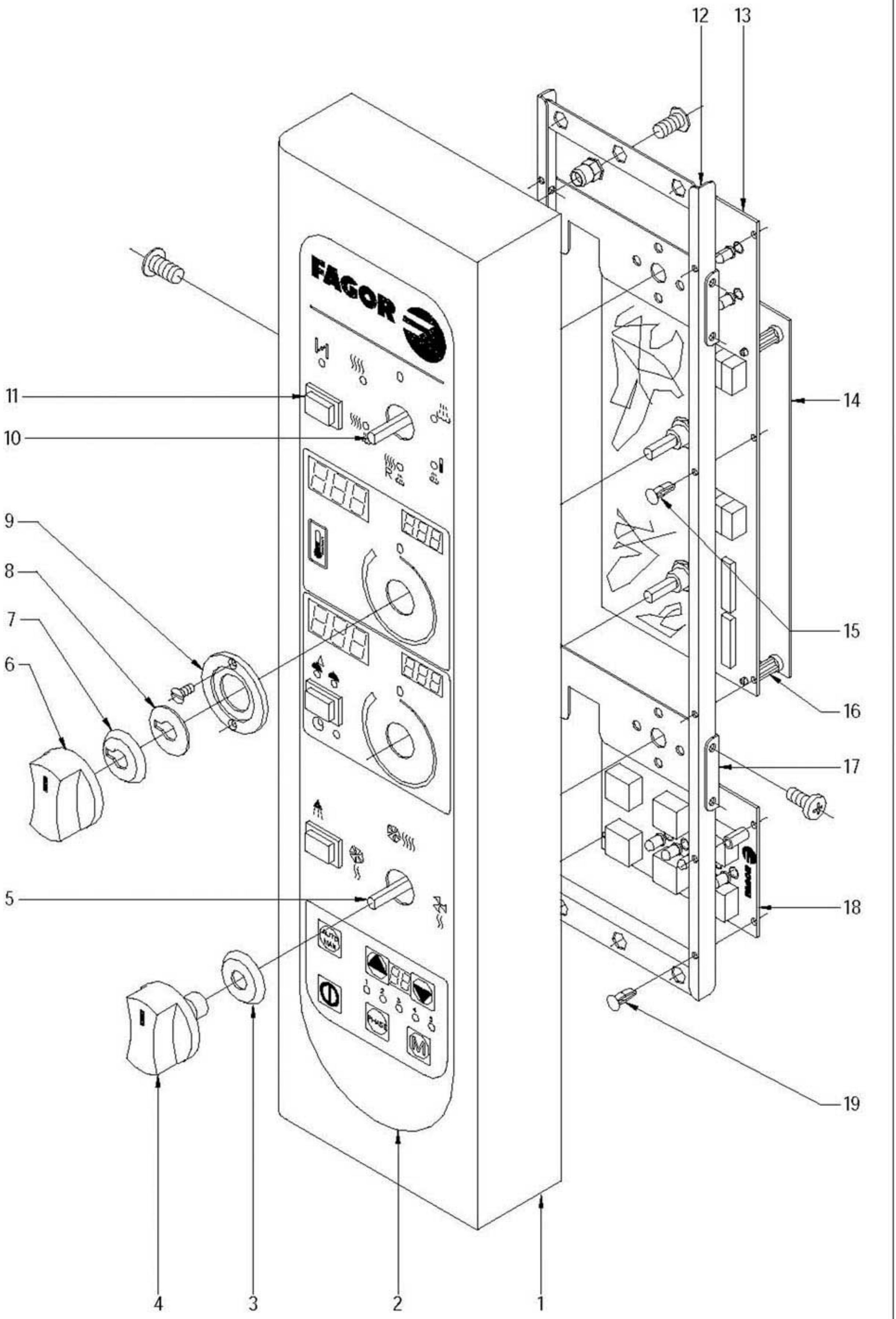


| N plano | Firma | Fecha | Aparato | Lamina | |
|---|---|---|---|---|---|
| C-1956 | | 2007-12 | SISTEMA ELECTRICO PORTAMANDOS<br>HORNOS HEM; HEP-20/11 | 10 | Fagor Industrial S.Coop.<br>Onate |

| MOD. | HORNOS | ZONA | PARTE ELECTRICA PORTAMANDOS | PLANO | C-1956 |
|---|---|---|---|---|---|

| ITEM | CODIGO | DENOMINACION | TEXTO | HEM 20/11 | HEP 20/11 | | | | | | NOTAS |
|---|---|---|---|---|---|---|---|---|---|---|---|
| 1 | R092867000 | PORTAMANDOS COMPLETO 20/11 | COMPLETE CONTROL HOLDER 2 | 1 | 1 | | | | | | |
| | Q152004000 | TORNILLO APLAST. M5X13 A 304 | FLAT SCREW M.5x13 | 5 | 5 | | | | | | |
| | Q221342000 | REMACHE EXAGONAL M5 | HEXAGONAL RIVET M.5 | 2 | 2 | | | | | | |
| 2 | R673067000 | SERIGRAFIA HEM-10/11 20/11 | SERIGRAPHY HEM-10/11 20/11 | 1 | _ | | | | | | |
| 2 | R673068000 | SERIGRAFIA HEP-10/11 20/11 | SERIGRAPHY HEP-10/11 20/11 | _ | 1 | | | | | | |
| 3 | R663046000 | JUNTA CONMUTADOR | SWITCH JOINT | 2 | 2 | | | | | | |
| 4 | R663062000 | BOTÓN DE MANDO COMPLETO | COMPLETE CONTROL BUTTON | 2 | 2 | | | | | | |
| 5 | R663026000 | CONMUTADOR FUNC 3P HME/P | FUNCTION SWITCH | 1 | 1 | | | | | | |
| 6 | R663063000 | BOTÓN DE MANDO COMPLETO | KNOB ELECTRONIC | 2 | 2 | | | | | | |
| 7 | R663045000 | JUNTA POTENCIOMETRO | RUBBER SEAL | 2 | 2 | | | | | | |
| 8 | R662810000 | ARANDELA GUIA | GUIDE WASHER | 2 | 2 | | | | | | |
| 9 | R662809000 | GUIA BOTON DE MANDO | KNOB GUIDE | 2 | 2 | | | | | | |
| | Q151346000 | TORNILLO AVELLANADO M3x5 | BOLT M.3x5 | 4 | 4 | | | | | | |
| 10 | R663025000 | CONMUTADOR FUNC 6P HME/P | MODE SWITCH | 1 | 1 | | | | | | |
| 11 | R663032000 | PULSADOR L41M8M959F | PUSH BUTTON | 3 | 3 | | | | | | |
| 12 | R663005000 | SOPORTE CIRCUITO IMPRESO | ELECTRONIC SUPPORT FRAME | 1 | 1 | | | | | | |
| 13 | R663050000 | CIRCUITO IMPRESO MANDO | ELECTRONIC DISPLAYS | 1 | 1 | | | | | | |
| 14 | R663085000 | CIRCUITO IMPR. CONTROL PROGR | ELECTROC BOARD HMP | 1 | 1 | | | | | | |
| 15 | R663036000 | FIJACION CIRCUITO | CIRCUIT BINDINGS | 6 | 6 | | | | | | |
| 16 | R663035000 | SEPARADOR 19,1 MM. HME/P | PLASTIC SEPARATOR | 4 | 4 | | | | | | |
| 17 | R663008000 | SOPORTE CONMUTADOR | COMMUTATOR SUPPORT | 2 | 2 | | | | | | |
| | Q151320000 | TORN. ALOMADO M4X6 H.ZINCADO | CURVED SCREW M.4x6 | 8 | 8 | | | | | | |
| 18 | R663004000 | CIRCUITO IMPRESO PROGRAMA | ELECTRONIC PROGRAMER | _ | 1 | | | | | | |
| 19 | R663036000 | FIJACION CIRCUITO | CIRCUIT BINDINGS | _ | 4 | | | | | | |
| | | | | | | | | | | | |
| | | | | | | | | | | | |
| | | | | | | | | | | | |
| | | | | | | | | | | | |
| | | | | | | | | | | | |
| | | | | | | | | | | | |
| | | | | | | | | | | | |

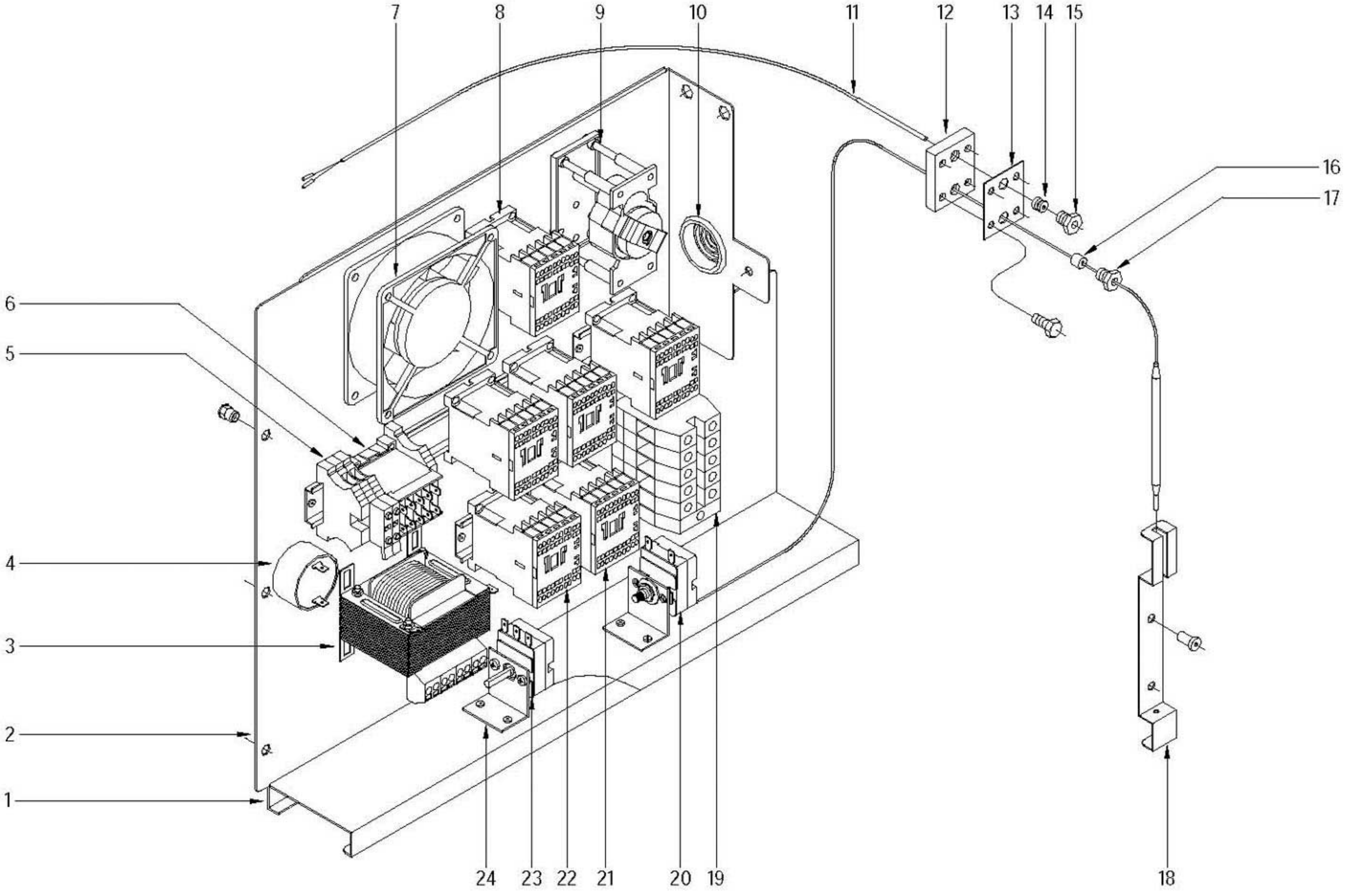


| N plano | Firma | Fecha | Aparato | | Lamina | |
|---|---|---|---|---|---|---|
| C-1957 | | 2007-12 | CUADRO ELECTRICO<br>HORNO HEI-20/11 | | 11 | Fagor Industrial S.Coop. FAGOR<br>Oñate |

| MOD. | HORNOS | ZONA | CUADRO ELECTRICO | PLANO | C-1957 |
|---|---|---|---|---|---|

| ITEM | CODIGO | DENOMINACION | TEXTO | HEI 20/11 | | | | | | | NOTAS |
|---|---|---|---|---|---|---|---|---|---|---|---|
| 1 | R723101000 | CONTRAGUIA CUADRO HCG | SWITCHBOARD COUNTERGUIDE | 1 | | | | | | | |
| | Q412002000 | REMACHE AVINOX Ø4x10MM | TUBULAR RIVET 4x7,5 | 7 | | | | | | | |
| 2 | R663081000 | PANEL CUADRO 6-10-20/11 ELECT | SWITCHBOARD PANEL 6-10-20/1 | 1 | | | | | | | |
| | Q221342000 | REMACHE EXAGONAL M5 | HEXAGONAL RIVET M.5 | 3 | | | | | | | |
| 3 | R503005000 | TRANSFORMADOR | TRANSFORMER | 1 | | | | | | | |
| | Q032021000 | TORNILLO ALOMADO M4x10 | CURVED SCREW M.4x10 | 4 | | | | | | | |
| | Q162020000 | TUERCA EXAGONAL M4 | HEXAGONAL NUT M4 | 4 | | | | | | | |
| 4 | R693067000 | ZUMBADOR | BUZZER | 1 | | | | | | | |
| 5 | R073005000 | BORNAS PORTA FUSIBLES | FUSE SUPPORT | 2 | | | | | | | |
| | Z263303000 | TOPE FINAL | END BUFFER 10 | 1 | | | | | | | |
| 6 | Z683087000 | CONTACTOR 3TF20 01-3AL2 230 | CONTACTOR 230V 50-60 Hz | 1 | | | | | | | |
| | Z263303000 | TOPE FINAL | END BUFFER 10 | 1 | | | | | | | |
| 7 | Z103066000 | VENTILADOR 230V.50-60HZ | FAN 230V 50/60HZ | 1 | | | | | | | |
| 8 | Z743009000 | CONTAC. SIRIUS 3RT10 16-2AP02 | SIRIUS 3RT10, 16-2APO2 CONTA | 1 | | | | | | | |
| 9 | R763006000 | PROGRAMADOR INVERSION GIRO | PROGRAMMER | 1 | | | | | | | |
| | Z123018000 | GUIA CONTACTOR L-55 | CONTACTOR GUIDE L=55 | 1 | | | | | | | |
| 10 | N103013000 | PASA CABLES | BUSHING | 1 | | | | | | | |
| 11 | R663090000 | CONJUNTO TERMOPAR | THERMOCOUPLE SET | 1 | | | | | | | |
| 12 | R662659000 | APOYO RACORD SONDA | PROBE RACORD SUPPORT | 1 | | | | | | | |
| 13 | R692811000 | JUNTA PASAMUROS DOBLE | DOUBLE FEEDTHROUGH GASKE | 1 | | | | | | | |
| 14 | R662652000 | BICONO CIERRE SONDA | PROBE CLOSING BICONE | 1 | | | | | | | |
| 15 | R662629000 | RACORD CIERRE SONDA | PROBE CLOSING ADAPTOR | 1 | | | | | | | |
| | Q032021000 | TORNILLO ALOMADO M4X10 | CURVED SCREW M.4x10 | 4 | | | | | | | |
| | Q232020000 | ARANDELA A-4 | FLAT WASHER A.4 | 4 | | | | | | | |
| 16 | R662662000 | JUNTA CIERRE BULBO LIMITADOR | LIMITING BULB CLOSING JOINT | 1 | | | | | | | |
| 17 | R662629000 | RACORD CIERRE SONDA | PROBE CLOSING ADAPTOR | 1 | | | | | | | |
| | Q412002000 | REMACHE AVINOX Ø4x10MM | TUBULAR RIVET 4x7,5 | 4 | | | | | | | |
| 18 | R662683000 | SOPORTE BULBO | LIMITING BULB HOLDER | 1 | | | | | | | |
| | Q412002000 | REMACHE AVINOX Ø4x10MM | TUBULAR RIVET 4x7,5 | 2 | | | | | | | |
| | | | | | | | | | | | |
| | | | | | | | | | | | |

| MOD. | HORNOS | ZONA | CUADRO ELECTRICO | PLANO | C-1957 |
|---|---|---|---|---|---|

| ITEM | CODIGO | DENOMINACION | TEXTO | HEI 20/11 | | | | | | | NOTAS |
|---|---|---|---|---|---|---|---|---|---|---|---|
| 19 | R263003000 | BORNA PASO 35MM | GREY PHASE 35 TERMINAL | 3 | | | | | | | |
| | R673010000 | BORNA PASO AZUL 35MM | NEUTRAL TERMINAL 35 BLUE | 1 | | | | | | | |
| | Z103035000 | BORNA TIERRA 35MM | EARTH TERMINAL 35mm YELLOV | 1 | | | | | | | |
| | Z683096000 | TOPE FINAL WEW35 10590.0 | END BUFFER 35 | 1 | | | | | | | |
| | Z683068000 | SEÑALIZ.DEK-6WEIDMULLER | R-S-T-N LABEL | 1 | | | | | | | |
| | R663055000 | GUIA CONTACTOR L-120 | CONTACTOR GUIDE L=120 | 1 | | | | | | | |
| 20 | R243016000 | LIMITADOR TEMPERATURA | SAFETY THERMOSTAT | 1 | | | | | | | |
| 21 | Z203050000 | CONTACTOR SIRIUS 3R 230V.50-60 | CONTACTOR 3RT-1016-21P01 | 4 | | | | | | | |
| | R693009000 | GUIA CONTACTOR L-250 | CONTACTOR GUIDE L=250 | 1 | | | | | | | |
| 22 | Z743009000 | CONTAC. SIRIUS 3RT10 16-2AP02 | SIRIUS 3RT10, 16-2APO2 CONTA | 1 | | | | | | | |
| | Z403016000 | GUIA CONTACTOR L-100 | CONTACTOR GUIDE L=100 | 1 | | | | | | | |
| 23 | R343018000 | TERMOSTATO VAPOR | STEAM THERMOSTAT | 1 | | | | | | | |
| 24 | R343039000 | SOPORTE TERMOS VAPOR | THERMOSTAT SUPPORT | 2 | | | | | | | |
| | Q412002000 | REMACHE AVINOX Ø4x10MM | TUBULAR RIVET 4x7,5 | 4 | | | | | | | |

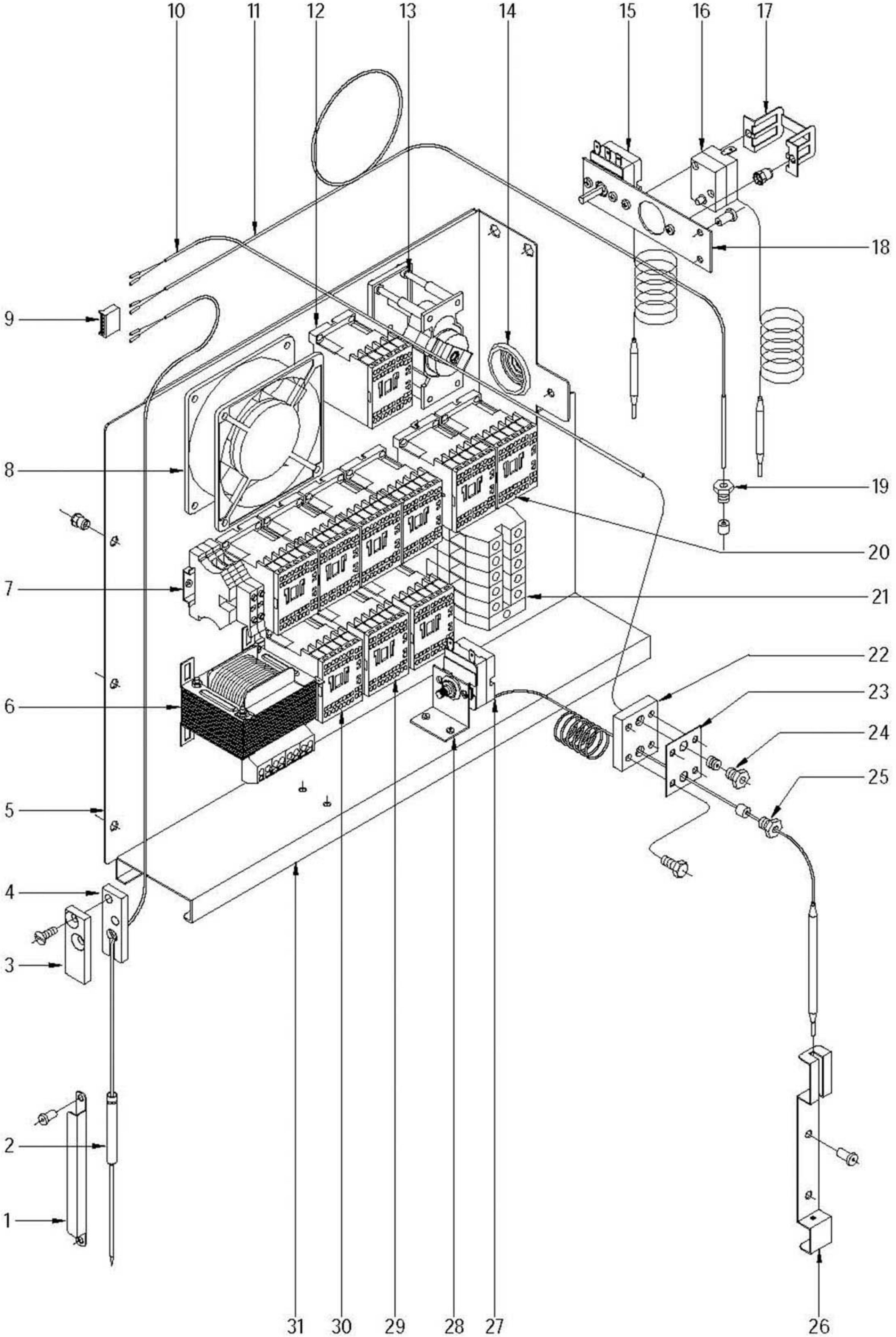


| N plano | Firma | Fecha | Aparato | Lamina | |
|---|---|---|---|---|---|
| C-1958 | Irene Beraza | 2007-12 | CUADRO ELECTRICO<br>HORNOS HEM; HEP-20/11 | 12 | Fagor Industrial S.Coop. FAGOR<br>Oñate |

| MOD. | HORNOS | ZONA | CUADRO ELECTRICO | PLANO | C-1958 |
|---|---|---|---|---|---|

| ITEM | CODIGO | DENOMINACION | TEXTO | HEM 20/11 | HEP 20/11 | | | | | | NOTAS |
|---|---|---|---|---|---|---|---|---|---|---|---|
| 1 | R092633000 | RETENEDOR DE SONDA | CORE PROBE RETAINER | 3 | 3 | | | | | | |
| | Q412002000 | REMACHE AVINOX Ø4x10MM | TUBULAR RIVET 4x7,5 | 3 | 3 | | | | | | |
| 2 | R673076000 | CONJUNTO SONDA NUCLEO J XX/1 | MEAT PROBE SET | 1 | 1 | | | | | | |
| | Q221341000 | REMACHE EXAGONAL M4 | HEXAGONAL RIVET M.4 | 2 | 2 | | | | | | |
| 3 | T133037000 | TAPA SUJECION SONDA | COVER CORE PROBE | 1 | 1 | | | | | | |
| 4 | T133036000 | BASE SUJECION SONDA | FIXING CORE PROBE | 1 | 1 | | | | | | |
| 5 | R663081000 | PANEL CUADRO 6-10-20/11 ELECT | SWITCHBOARD PANEL 6-10-20/1 | 1 | 1 | | | | | | |
| | Q221342000 | REMACHE EXAGONAL M5 | HEXAGONAL RIVET M.5 | 3 | 3 | | | | | | |
| 6 | R503005000 | TRANSFORMADOR | TRANSFORMER | 1 | 1 | | | | | | |
| | Q032021000 | TORNILLO ALOMADO M4x10 | CURVED SCREW M.4x10 | 4 | 4 | | | | | | |
| | Q162020000 | TUERCA EXAGONAL M4 | HEXAGONAL NUT M4 | 4 | 4 | | | | | | |
| 7 | R073005000 | BORNAS PORTA FUSIBLES | FUSE SUPPORT | 2 | 2 | | | | | | |
| | Z263303000 | TOPE FINAL | END BUFFER 10 | 2 | 2 | | | | | | |
| 8 | Z103066000 | VENTILADOR 230V.50-60HZ | FAN 230V 50/60HZ | 1 | 1 | | | | | | |
| 9 | R663093000 | CONECTOR 6 VIAS | 6-WAY CONNECTOR | 1 | 1 | | | | | | |
| 10 | R663090000 | CONJUNTO TERMOPAR | THERMOCOUPLE SET | 1 | 1 | | | | | | |
| 11 | R663089000 | CONJ, TERMOPAR VAPOR HME/P | STEAM THERMOCOUPLE ASSEM | 1 | 1 | | | | | | |
| 12 | Z743009000 | CONT.SIRIUS 3RT10 16-2AP02 | SIRIUS 3RT10, 16-2APO2 CONTA | 1 | 1 | | | | | | |
| 13 | R763006000 | PROGRAMADOR INVERSION GIRO | PROGRAMMER | 1 | 1 | | | | | | |
| | Z123018000 | GUIA CONTACTOR L-55 | CONTACTOR GUIDE L=55 | 1 | 1 | | | | | | |
| 14 | N103013000 | PASA CABLES | BUSHING | 1 | 1 | | | | | | |
| 15 | R343100000 | TERMOSTATO CONDUC. VAPOR | STEAM CONDUCTION THERMOS | 1 | 1 | | | | | | |
| 16 | Z213014000 | LIMITADOR TECASA P. | TECASA LIMITER THERMOSTAT | 1 | 1 | | | | | | |
| 17 | Z203060000 | AMARRE LIMITADOR TECASA | TECASA LIMITER ANCHORING | 1 | 1 | | | | | | |
| | Q221341000 | REMACHE EXAGONAL M4 | HEXAGONAL RIVET M.4 | 2 | 2 | | | | | | |
| 18 | R673077000 | SOPORTE AMARRE TERMOSTATOS | THERMOSTAT ATTACHMENT SUI | 1 | 1 | | | | | | |
| | Q412002000 | REMACHE AVINOX Ø4x10MM | TUBULAR RIVET 4x7,5 | 2 | 2 | | | | | | |
| 19 | R662629000 | RACORD CIERRE SONDA | PROBE CLOSING ADAPTOR | 1 | 1 | | | | | | |
| | 3712400000 | TUBO SILICONA NEGRO D 8*3 | BLACK SILICONE PIPE D 8*3 | 1 | 1 | | | | | | |
| 20 | Z203050000 | CONTACTOR SIRIUS 3R 230V.50-60 | CONTACTOR 3RT-1016-21P01 | 6 | 6 | | | | | | |
| | R693009000 | GUIA CONTACTOR L-250 | CONTACTOR GUIDE L=250 | 1 | 1 | | | | | | |

| MOD. | HORNOS | ZONA | CUADRO ELECTRICO | PLANO | C-1958 |
|---|---|---|---|---|---|

| ITEM | CODIGO | DENOMINACION | TEXTO | HEM 20/11 | HEP 20/11 | | | | | | NOTAS |
|---|---|---|---|---|---|---|---|---|---|---|---|
| 21 | R263003000 | BORNA PASO 35MM | GREY PHASE 35 TERMINAL | 3 | 3 | | | | | | |
| | R673010000 | BORNA PASO AZUL 35MM | NEUTRAL TERMINAL 35 BLUE | 1 | 1 | | | | | | |
| | Z103035000 | BORNA TIERRA 35MM | EARTH TERMINAL 35mm YELLOV | 1 | 1 | | | | | | |
| | Z683096000 | TOPE FINAL WEW35 10590.0 | END BUFFER 35 | 1 | 1 | | | | | | |
| | Z683068000 | SEÑALIZ.DEK-6WEIDMULLER | R-S-T-N LABEL | 1 | 1 | | | | | | |
| | R663055000 | GUIA CONTACTOR L-120 | CONTACTOR GUIDE L=120 | 1 | 1 | | | | | | |
| 22 | R662659000 | APOYO RACORD SONDA | PROBE RACORD SUPPORT | 1 | 1 | | | | | | |
| 23 | R692811000 | JUNTA PASAMUROS DOBLE | DOUBLE FEEDTHROUGH GASKE | 1 | 1 | | | | | | |
| 24 | R662629000 | RACORD CIERRE SONDA | PROBE CLOSING ADAPTOR | 1 | 1 | | | | | | |
| | R662652000 | BICONO CIERRE SONDA | PROBE CLOSING BICONE | 1 | 1 | | | | | | |
| 25 | R662629000 | RACORD CIERRE SONDA | PROBE CLOSING ADAPTOR | 1 | 1 | | | | | | |
| | R662662000 | JUNTA CIERRE BULBO LIMITADOR | LIMITING BULB CLOSING JOINT | 1 | 1 | | | | | | |
| | Q012021000 | TORNILLO EXAGONAL M4x10 A304 | HEXAGONAL BOLT M4x10 A304 | 4 | 4 | | | | | | |
| 26 | R662683000 | SOPORTE BULBO | BULB SUPPORT | 1 | 1 | | | | | | |
| | Q412002000 | REMACHE AVINOX Ø4x10MM | TUBULAR RIVET 4x7,5 | 4 | 4 | | | | | | |
| 27 | R243016000 | LIMITADOR TEMPERATURA | TEMPERATURE LIMITER | 1 | 1 | | | | | | |
| 28 | R343039000 | SOPORTE TERMOS VAPOR | THERMOSTAT SUPPORT | 1 | 1 | | | | | | |
| | Q412002000 | REMACHE AVINOX Ø4x10MM | TUBULAR RIVET 4x7,5 | 2 | 2 | | | | | | |
| 29 | Z203050000 | CONTACTOR SIRIUS 3R 230V.50-60 | SIRIUS CONTACTOR 3R 230V.50- | 2 | 2 | | | | | | |
| | Z103084000 | GUIA CONTACTOR L-138 " | CONTACOR GUIDE L-138 " | 1 | 1 | | | | | | |
| 30 | Z743009000 | CONT.SIRIUS 3RT10 16-2AP02 | SIRIUS 3RT10, 16-2APO2 CONTA | 1 | 1 | | | | | | |
| 31 | R723101000 | CONTRAGUIA CUADRO HCG | SWITCHBOARD COUNTERGUIDE | 1 | 1 | | | | | | |
| | Q412002000 | REMACHE AVINOX Ø4x10MM | TUBULAR RIVET 4x7,5 | 7 | 7 | | | | | | |
| | | | | | | | | | | | |
| | | | | | | | | | | | |
| | | | | | | | | | | | |
| | | | | | | | | | | | |
| | | | | | | | | | | | |
| | | | | | | | | | | | |
| | | | | | | | | | | | |
| | | | | | | | | | | | |

| MOD. | HORNOS | ZONA | VARIOS | PLANO | |
|---|---|---|---|---|---|

| ITEM | CODIGO | DENOMINACION | TEXTO | HEI 20/11 | HEM 20/11 | HEP 20/11 | | | | | |
|---|---|---|---|---|---|---|---|---|---|---|---|
| | R696501000 | FOLLETO INSTRUCCIONES HMI | INSTRUCTIONS BROCHURE | 1 | _ | _ | | | | | |
| | R666501000 | FOLLETO DE INSTRUC. HME/HMP | INSTRUCTIONS BROCHURE | _ | 1 | 1 | | | | | |
| | R703041000 | ESQUEMA TEORICO HEI 10/11 | THEORETICAL DIAGRAM HEI 10/ | 1 | _ | _ | | | | | PLANO HC-76614 |
| | R143032000 | ESQUEMA TEORICO HME20 | THEORETICAL DIAGRAM HME20 | _ | 1 | 1 | | | | | PLANO HC-77660 |
| | R703016000 | ESQUEMA DE MONTAJE HMI | ASSEMBLY DIAGRAM HMI | 1 | _ | _ | | | | | PLANO HC-73224 |
| | R143018000 | ESQUEMA DE MONTAJE HME/HMP | ASSEMBLY DIAGRAM HME/HMP | _ | 1 | 1 | | | | | PLANO HD-12681 |
| | | | | | | | | | | | |
| | | | | | | | | | | | |
| | R693089000 | INSTALACION ELECTRICA HMI | ELECTRICAL INSTALLATION HMI | 1 | _ | _ | | | | | |
| | R143017000 | INSTALACION ELECTR. HME/HMP | ELEC. INSTALLATION HME/HMP | _ | 1 | 1 | | | | | |
| | R703013000 | CABLEADO FUERZA HMI 10/11 | WIRING HMI 10/11 | 1 | _ | _ | | | | | |
| | R143005000 | CABLEADO FUERZA CONVECCION | WIRING TO CONVECTION | 1 | 1 | 1 | | | | | |
| | R673013000 | CABLEADO FUERZA CUADRO ELE. | WIRING TO SWITCHBOARD | _ | 1 | 1 | | | | | |
| | R143004000 | CABLEADO FUERZA VAPOR | WIRING TO STEAM | | 1 | 1 | | | | | |
| | R093023000 | CABLEADO LUZ INTERIOR | INTERIOR LIGHT WIRING | 1 | 1 | 1 | | | | | |
| | R093004000 | CABLEADO AUXILIAR | AUXILIAR WIRING | 2 | 2 | 2 | | | | | |
| | R763007000 | CABLEADO INVERSION GIRO E | WIRING INVERT ROTATION E | 1 | 1 | 1 | | | | | |
| | R763011000 | MONTAJE INVERSION GIRO HMM | ASSEMBLY INVERT ROTATION H | 1 | 1 | 1 | | | | | |
| | R143009000 | INSTALACION DOBLE POTENCIA | DOUBLE POWER INSTALLATION | _ | 1 | 1 | | | | | |
| | T133001000 | CABLEAD. CONEXION 2 MOTORES | WIRING CONNECTION 2 MOTOR | 1 | 1 | 1 | | | | | |
| | R663041000 | CONEXION CONTROL PROGRAMA | CONNECTION PROGRAMME CO | _ | _ | 1 | | | | | |
| | | | | | | | | | | | |
| | | | | | | | | | | | |
| | | | | | | | | | | | |
| | | | | | | | | | | | |
| | | | | | | | | | | | |
| | | | | | | | | | | | |
| | | | | | | | | | | | |
| | | | | | | | | | | | |
| | | | | | | | | | | | |
| | | | | | | | | | | | |

| MOD. | HORNOS | ZONA | CAMBIOS PARA PASAR DE (380-415V. 50Hz) A (220V. 50Hz) | PLANO | C-1952 |
|---|---|---|---|---|---|

| ITEM | CODIGO | DENOMINACION | TEXTO | HEI 20/11 | HEM 20/11 | HEP 20/11 | | | | | |
|---|---|---|---|---|---|---|---|---|---|---|---|
| | | **PIEZAS A ELIMINAR** | **PARTS TO BE REMOVED** | | | | | | | | |
| 2 | T493003000 | MOTOR 20/21 2V 400V | MOTOR 20/21 2V 400V. | _ | 2 | 2 | | | | | |
| | | | | | | | | | | | |
| | | | | | | | | | | | |
| | | | | | | | | | | | |
| | | | | | | | | | | | |
| | | | | | | | | | | | |
| | | | | | | | | | | | |
| | | | | | | | | | | | |
| | | | | | | | | | | | |
| | | | | | | | | | | | |
| | | | | | | | | | | | |
| | | **PIEZAS A INTRODUCIR** | **PARTS TO BE INCLUDED** | | | | | | | | |
| 2 | T493004000 | MOTOR 20/21 2V 230V. | MOTOR 20/21 2V 230V. | _ | 2 | 2 | | | | | |
| | | | | | | | | | | | |
| | | | | | | | | | | | |
| | | | | | | | | | | | |
| | | | | | | | | | | | |
| | | | | | | | | | | | |
| | | | | | | | | | | | |
| | | | | | | | | | | | |
| | | | | | | | | | | | |
| | | | | | | | | | | | |
| | | | | | | | | | | | |
| | | | | | | | | | | | |
| | | | | | | | | | | | |
| | | | | | | | | | | | |
| | | | | | | | | | | | |
| | | | | | | | | | | | |
| | | | | | | | | | | | |

| MOD. | HORNOS | ZONA | CAMBIOS PARA PASAR DE (380-415V. 50Hz) A (380-415V. 60Hz) | PLANO | C-1949 |
|---|---|---|---|---|---|

| ITEM | CODIGO | DENOMINACION | TEXTO | HEI 20/11 | HEM 20/11 | HEP 20/11 | | | | | |
|---|---|---|---|---|---|---|---|---|---|---|---|
| | | **PIEZAS A INTRODUCIR** | **PARTS TO BE INCLUDED** | | | | | | | | |
| 13 | T322606000 | REDUCC. CUBREVENT. 60HzD160 | FANCOVER REDUC. 60HzD160 | | 2 | 2 | | | | | |

| MOD. | HORNOS | ZONA | CAMBIOS PARA PASAR DE (380-415V. 50Hz) A (220V. 60Hz) | PLANO | |
|---|---|---|---|---|---|

| ITEM | CODIGO | DENOMINACION | TEXTO | HEI 20/11 | HEM 20/11 | HEP 20/11 | | | | | |
|---|---|---|---|---|---|---|---|---|---|---|---|
| | | **PIEZAS A ELIMINAR** | **PARTS TO BE REMOVED** | | | | | | | | |
| 2 | T493003000 | MOTOR 20/21 2V 400V | MOTOR 20/21 2V 400V. | _ | 2 | 2 | | | | | PLANO HC-1952 |
| | | | | | | | | | | | |
| | | | | | | | | | | | |
| | | | | | | | | | | | |
| | | | | | | | | | | | |
| | | | | | | | | | | | |
| | | | | | | | | | | | |
| | | | | | | | | | | | |
| | | | | | | | | | | | |
| | | | | | | | | | | | |
| | | | | | | | | | | | |
| | | | | | | | | | | | |
| | | **PIEZAS A INTRODUCIR** | **PARTS TO BE INCLUDED** | | | | | | | | |
| 13 | T322606000 | REDUCC. CUBREVENT. 60HzD160 | FANCOVER REDUC. 60HzD160 | _ | 2 | 2 | | | | | PLANO HC-1949 |
| 2 | T493004000 | MOTOR 20/21 2V 230V. | MOTOR 20/21 2V 230V. | _ | 2 | 2 | | | | | PLANO HC-1952 |
| | | | | | | | | | | | |
| | | | | | | | | | | | |
| | | | | | | | | | | | |
| | | | | | | | | | | | |
| | | | | | | | | | | | |
| | | | | | | | | | | | |
| | | | | | | | | | | | |
| | | | | | | | | | | | |
| | | | | | | | | | | | |
| | | | | | | | | | | | |
| | | | | | | | | | | | |
| | | | | | | | | | | | |
| | | | | | | | | | | | |
| | | | | | | | | | | | |

| MOD. | HORNOS | ZONA | PIEZAS ESPECIFICAS PARA VAUBAN | PLANO | C-1947 |
|---|---|---|---|---|---|

| ITEM | CODIGO | DENOMINACION | TEXTO | VEI-20/11 | VECE-20/11 | VECP-20/11 | | | | | |
|---|---|---|---|---|---|---|---|---|---|---|---|
| | | **PIEZAS A ELIMINAR** | **PARTS TO BE REMOVED** | | | | | | | | |
| 5 | R703042000 | SERIGRAFIA HEI-10/11 | SERIGRAPHY HEI-10 / 11 | 1 | _ | _ | | | | | |
| 5 | R673067000 | SERIGRAFIA HEM-10/11 20/11 | SERIGRAPHY HEM-10/11 20/11 | _ | 1 | _ | | | | | |
| 5 | R673068000 | SERIGRAFIA HEP-10/11 20/11 | SERIGRAPHY HEP-10/11 20/11 | _ | _ | 1 | | | | | |
| | | | | | | | | | | | |
| | | | | | | | | | | | |
| | | | | | | | | | | | |
| | | | | | | | | | | | |
| | | | | | | | | | | | |
| | | | | | | | | | | | |
| | | | | | | | | | | | |
| | | | | | | | | | | | |
| | | | | | | | | | | | |
| | | | | | | | | | | | |
| | | **PIEZAS A INTRODUCIR** | **PARTS TO BE INCLUDED** | | | | | | | | |
| 5 | R703043000 | SERIGRAFIA VAUBAN VEI-10/11 | SERIGRAPHY VAUBAN VEI-10/11 | 1 | _ | _ | | | | | |
| 5 | R673069000 | SERIGRAFIA VAUBAN VECE-10/11 | SERIGRAPHY VAUBAN VECE-10/ | _ | 1 | _ | | | | | |
| 5 | R673070000 | SERIGRAFIA VAUBAN VECP-10/11 | SERIGRAPHY VAUBAN VECP-10/ | _ | _ | 1 | | | | | |
| | | | | | | | | | | | |
| | | | | | | | | | | | |
| | | | | | | | | | | | |
| | | | | | | | | | | | |
| | | | | | | | | | | | |
| | | | | | | | | | | | |
| | | | | | | | | | | | |
| | | | | | | | | | | | |
| | | | | | | | | | | | |
| | | | | | | | | | | | |
| | | | | | | | | | | | |
| | | | | | | | | | | | |
| | | | | | | | | | | | |

# HEI - 10 / 11, HEI - 20 - 11

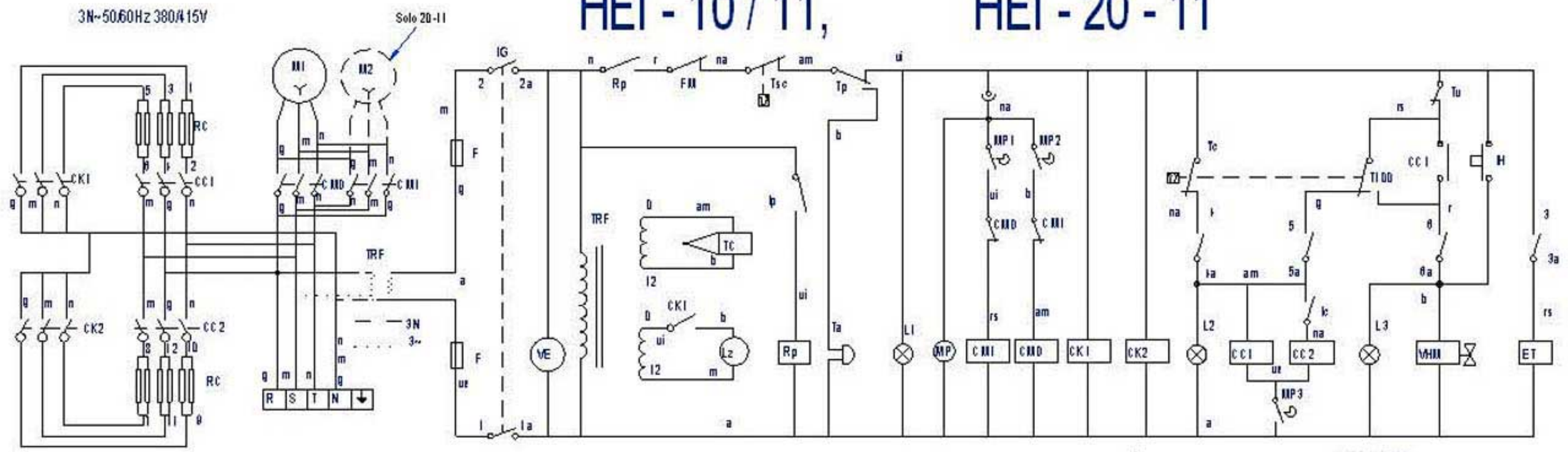


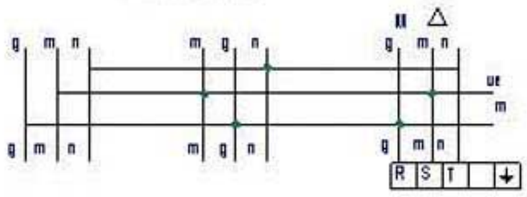


P = Door's switch
IG = General switch
F = Fuse
CMD = Right Motor's relay
CMI = Left Motor's relay
VDV = Steamer's solenoid
DN = Water level control
TM = Motor's thermal protection
TSV = Steamer's security thermostat
TSC = Connection's security thermostat
LZ = Indoor light
VHM = Humidify water solenoid
CE = Electronic main control
RV = Steamer elements
VE = Control panel's fan
Tr = Chimney selector

TRF, TRFI = Transformer
ET = Chimney solenoid
Ic = Power reduction switch
VCN = Steamer condenser solenoid
TV = Steam probe
TC = Connection probe
TN = Food probe
M = Motor
CC1 ,CC2 = Heating air relays
CV1 ,CV2 = Heating water relays
CK1 ,CK2 ,K1 ,K2 = Elements relays
TCN = Steam condenser thermostat
H = Humidify switch
T = Timer or Food probe selector
RC = Heating element
MP = Timer Motor's inversion

am = amarillo-yellow-jaune
a = azul-blue-bleu
b = blanco-white-blanc
g = gris-grey-gris
ue = verde-green-vert
na = naranja-orange-orange
r = rojo-red-rouge
m = marron-brown-marron
n = negro-black-noir
rs = rosa-pink-rose
ui = violeta-violet-violette
amAze = amarilloAzuerde-yellowAgreen-jauneAvert

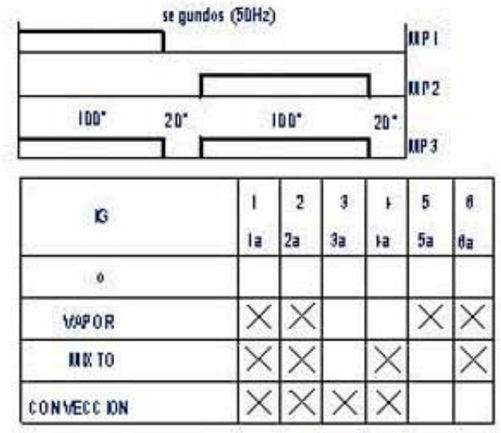


| IG | 1 1a | 2 2a | 3 3a | 4 4a | 5 5a | 6 6a |
|---|---|---|---|---|---|---|
| 0 | | | | | | |
| VAPOR | X | X | | | X | X |
| MIXTO | X | X | | X | | X |
| CONVECCION | X | X | X | X | | |

R1030-1000

T100: Termostato de 100ºC
Rc: Resistencia de calentamiento
IG: Interruptor general
Lz: Luz interior
F: Fusible
CMD, CMI: Contactor motor
VHM: Electrovalvula humidificador
IP: Interruptor puerta
FM: Térmico motor
TP: Temporizador manual
TSC: Termostato seguridad conexión
TV: Termostato vapor
TRF: Transformador

M: Motor
Tc: Termostato conexión
CK1, CC1 : Contactor calentamiento
ET: Electroimán de apertura de tiro
C: Condensador
L1: Lámpara marcha
L2: Lámpara calentamiento
L3: Lámpara humidificador
Ta: Timbre avisador
FI: Filtro de interferencias
IH: Pulsador de humidificador
VE: Ventilador cuadro eléctrico
Rp: Relé puerta
MP = Programador inversion motor

| | | | | | |
|---|---|---|---|---|---|
| | | | 3 ~ 50/60Hz 230 V | | |
| | Esquema teorico HEI 10-11, HEI 20-11 | | 3 ~ 50/60Hz 400 V | R-703041 | |
| Nº | Pieza | | Material | Nº Clasificación | Acabado |
| Nº | Modificación | | Propuesta de | Fecha | Tolerancias generales |
| 1 | Introducir HEI - 20-11 | | M.Martillo | 31-05-2001 | <25 ± 50-400 ± |
| | | | | | 5 -25 ± >400 ± |
| | | | | | 25 -50 ± ○ ± |

| | Firma | Fecha |
|---|---|---|
| Dibujado | Iratxe | 13/11/98 |
| Proyectado | | |
| Comprobado | | |

FAGOR
Fagor Industrial,Koop.Elk., Mugarra

Mecanizado superficial

Escala

HORNOS

Plano número
HC-76614 - 1

Sustituye al Nº

Sustituido por

# MODELO HEM-20/11 HEP-20/11 HEM-20/21 HEP-20/21

3N ~ 50/60Hz 380/415V

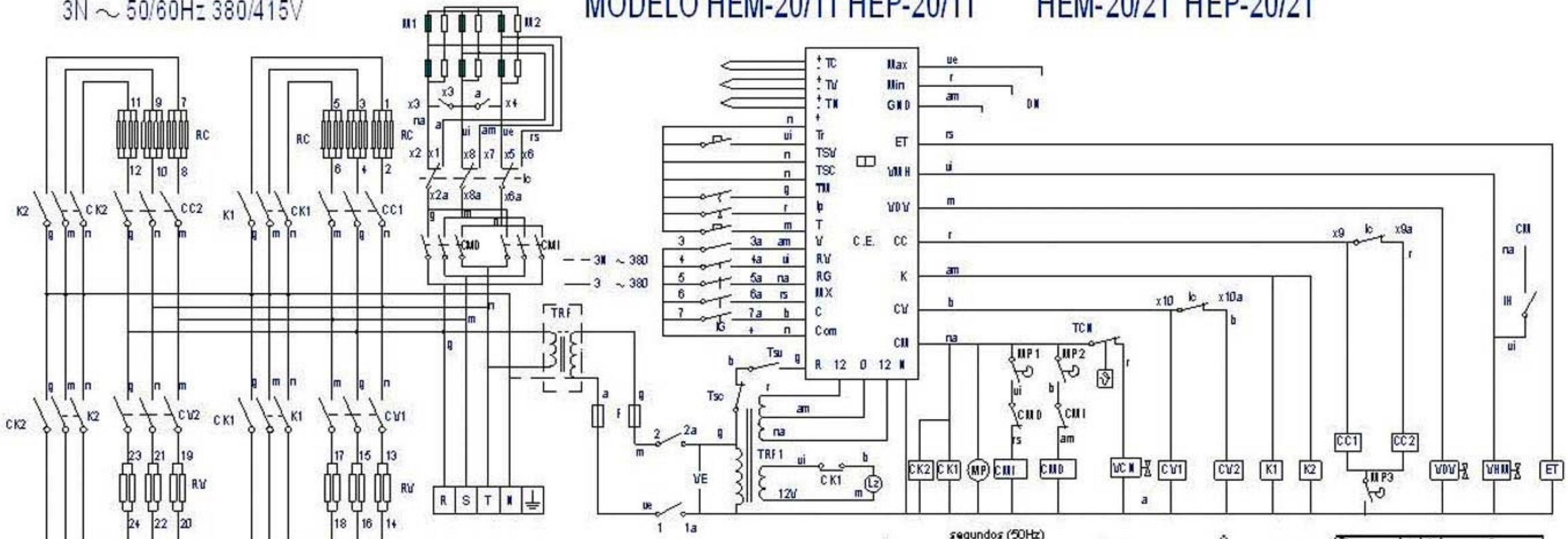


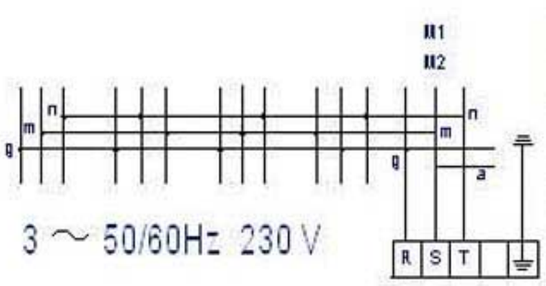


3 ~ 50/60Hz 230 V

IP = Door's switch
IG = General switch
F = Fuse
CMD = Right Motor's relay
CMI = Left Motor's relay
VDV = Steamer's solenoid
DN = Water level control
TM = Motor's thermal protection
TSV = Steamer's security thermostat
TSC = Convection's security thermostat
LZ = Indoor light
VHM = Humidity water solenoid
CE = Electronic main control
RV = Steamer elements
VE = Control panel's fan
Tr = Chimney selector

TRF, TRF1 = Transformer
ET = Chimney solenoid
Ic = Power reduction switch
VCN = Steamer condenser solenoid
TV = Steam probe
TC = Convection probe
TN = Food probe
M1, M2 = Motor
CC1,CC2 = Heating air relays
CV1,CV2 = Heating water relays
CK1,CK2,K1,K2 = Elements relays
TCN = Steam condenser thermostat
IH = Humidity switch
T = Timer or Food probe selector
RC = Heating element
MP = Timer Motor's inversion

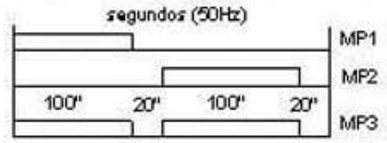


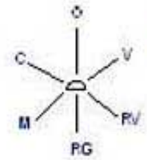


IG

am = amarillo-yellow-jaune
a = azul-blue-bleu
b = blanco-white-blanc
g = gris-grey-gris
ve = verde-green-vert
na = naranja-orange-orange
r = rojo-red-rouge
m = marron-brown-marron
n = negro-black-noir
rs = rosa-pink-rose
vi = violeta-violet-violette

| Mode | 1 1a | 2 2a | 3a | 4a | 5 5a | 6a | 7a |
|---|---|---|---|---|---|---|---|
| OFF | | | | | | | |
| VAPOR | X | X | X | | | | |
| REG VAPOR | X | X | | X | | | |
| REGENERAC | X | X | | | X | | |
| MIXTO | X | X | | | | X | |
| CONVECCION | X | X | | | | | X |

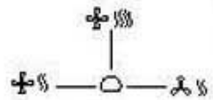

| Ic | x1 x1a | x2 x2a | x3 x3a | x4 x4a | x5 x5a | x6 x6a | x7 x7a | x8 x8a | x9 x9a | x10 x10A |
|---|---|---|---|---|---|---|---|---|---|---|
| | X | | X | X | | X | X | | | |
| | X | | X | X | | X | X | | X | X |
| | | X | | | X | | | X | | |

R143032000

am/ve = amarillo/verde-yellow/green-jaune/vert

| | | | | | | |
|---|---|---|---|---|---|---|
| | ESQUEMA TEORICO HME/P 20/11-20/21 | | | R143032000 | | |
| N° | Pieza | Cant. | Material | N° Clasificacion | Acabado | |
| N° | Modificacion | | Propuesta de | Fecha | Tolerancias generales | |
| | | | | | <5± | 50–100± : |
| | | | | | 5–25± : | >100± |
| | | | | | 25–50± : | <X± |

| | Firma | Fecha |
|---|---|---|
| Dibujado | M. Mallo | 17-10-2004 |
| Proyectado | M. Mallo | 17-10-2004 |
| Comprobado | | 17-10-2004 |
| Escala | | |

FAGOR

Fagor Industrial, Koop. Elk., Mugatua

Mecanizado superficial

HORNO MIXTO HME HMP

Plano numero HC-77660

Sustituye al N° hc72270

Sustituido por

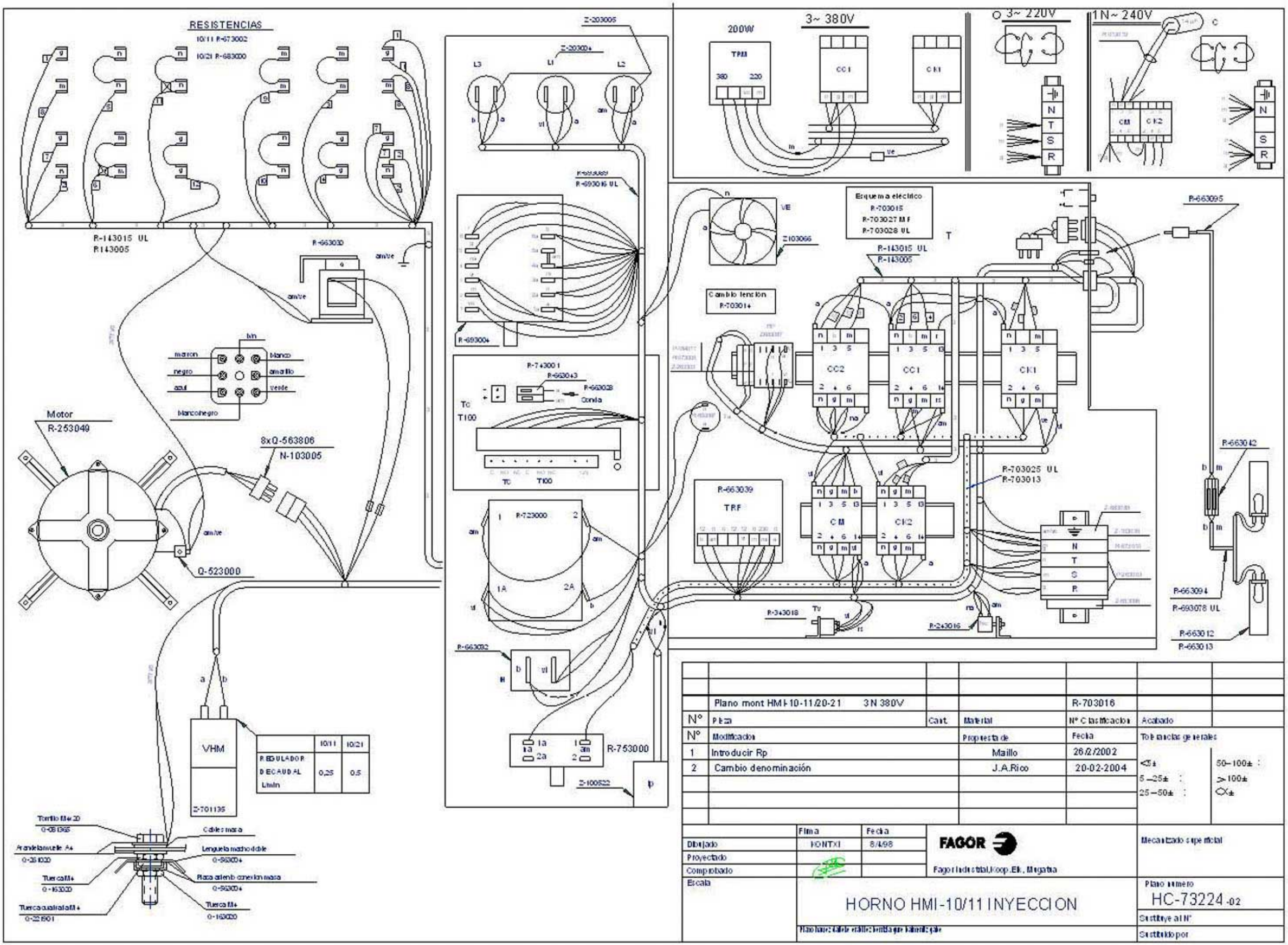
RESISTENCIAS
10/11 R-673002
10/21 R-683000
R-143015 UL
R143005
R-663030
am/ve
Motor
R-253049
8xQ-563806
N-103005
Q-523000
VHM
Z-701135
REGULADOR DE CAUDAL L/min
10/11
10/21
0,25
0,5
Tornillo M4x20
Arandela muelle A4
Tuerca M4
Tuerca cuadrada M4
Cables masa
Lengüeta macho doble
Plaza asiento conexion masa
Z-203005
Z-203004
L3
L1
L2
R-693016 UL
R-693004
R-743001
R-663043
R-663028
Conda
Tc
T100
R-723000
1A
2A
R-663032
R-753000
Z-100522
200W
TPM
380
220
3~ 380V
CC1
CK1
3~ 220V
1N~ 240V
CM
CK2
N
T
S
R
Esquema eléctrico
R-703015
R-703027 MF
R-703028 UL
Z103066
Cambio tensión
R-703014
CC2
CC1
CK1
R-663039
TRF
CM
CK2
R-703025 UL
R-703013
R-343018
R-243016
R-663095
R-663042
R-663094
R-693078 UL
R-663012
R-663013
Plano mont HMI-10-11/20-21 3N 380V
R-703016
N° Pieza
Cant.
Material
N° Clasificacion
Acabado
N° Modificacion
Propuesta de
Fecha
1 Introducir Rp
Maillo
26/2/2002
2 Cambio denominación
J.A.Rico
20-02-2004
Tolerancias generales
<5±
5 –25± :
25 –50± :
50–100± :
>100±
<X±
Firma
Fecha
Dibujado
KONTXI
8/4/98
Proyectado
Comprobado
Escala
FAGOR
Fagor Industrial, Koop. Elk., Mugatua
Mecanizado superficial
HORNO HMI-10/11 INYECCION
Plano numero
HC-73224-02
Sustituye al N°
Sustituido por

Resistencias

10/11 ——— R-673002
10/21 20/21 ——— R-663000 —20/11 TANICO
20/11 ——— R-093002

20/21 20/11 TANICO
LA CONEXION ES IGUAL
PARA LAS RESISTENCIAS
INFERIORES

ELECTROIMAN
Apertura
tiro
R-663030

ET

am/ve

b/n
marron
negro
azul
blanco/negro
blanco
amarillo
verde

Q-523000

solo 20/11 20/21
R-093004

SOLO 20/11 20/21
T-133001

MOTOR
380V R-663033
220V R-663034

N-103005
8xQ-563806

Solo 20/11 20/21

R-665016
R-345060
R-345063
R-345064

Termostato Limitador Calderín
R-343124

Termostato Condensación
R-343100

TSV
TCN

RESISTENCIAS DE GENERADOR
R-143000

SOLO VERSION 20/21

Calderín
Humidificador
Condensación

VDV
VHM
R-255001
VCN
Z-701135

Arandela A4
Q-233120
Tuerca M4
Q-163020
Terminal

DETALLE DEL MONTAJE "A"

Tornillo M4x20
Q-081365
Arandela muelle A4
Q-261020
Tuerca M4
Q-163020
Tuerca moletada M4
Q-221901
Cables masa
Lengueta macho doble
Q-563004
Placa asiento conexion masa
Q-563004
Tuerca M4
Q-163020

PRENSAESTOPAS

IG
R-663025
Tr
R-143017
Control R-663085
Mando R-663050
R-663032
T
R-143009
IH
R-663026
R-663041
HMP
R-663004
Z-100522
R-093012 UL
R-093004
Solo 20/11 20/21

3~50Hz 220V
1N~50Hz 240V
N T S R
R-663073
12µF
2µF
R-663072
CM CK
Motor: R-663034

| CONTACTORES | 20/21 | 10/11-10/21-20/11 | 20/11 TANICO |
|---|---|---|---|
| CC1, CC2, CK1, CK2, K1, K2 | X-183011 | ① R-663031 | X-183011 |
| * CV1, CV2 | X-183011 | R-663031 | R-663031 |

Esquema Eléctrico
20/21-20/11 R-143019
10/11-10/21 R-673058

VE
Z-103066
R-663055
R-143004
R-143005
R-143006
P-184011
R-073005
Z-263303
CV2 CC2 CV1 CC1
CK1 K1
R-663042
R-663031
R-503005
TRF
CM CK2 K2
20/21 10/11 20/11 10/21
Z-103035 Z-103035
R-143012 R-673010
R-143011 R-263003
R-143013 ——
Z-663096 Z-663096
N T S R
20/11 TANICO R-093010
10/11 10/21 R-673013
20/11 R-503000
Limitador
R-243016
R-663058
R-663013
10/11 10/21
R-663094
20/11 20/21
R-093021

| | | | | | |
|---|---|---|---|---|---|
| | Esq mon E/P-101/102/201/202 3N~380V | | | R-143018 | |
| N° | Pieza | Cant. | Material | Nº Clasificacion | Acabado |
| N° | Modificacion | | Propuesta de | Fecha | Tolerancias generales |
| ① | Sustituir R-143002 por X-183011 en hornos 2G/21 | | Egidon | 00-07-25 | <3± 50-100± |
| ② | Introducir Rp | | Mailo | 02-02-28 | 5-25± >100± |
| ③ | Cambio denominación | | J.A.Rico | 26-02-2004 | 25-50± ○± |

| | Firma | Fecha | | |
|---|---|---|---|---|
| Dibujado | JON | 16/3/99 | FAGOR | Mecanizado superficial |
| Proyectado | | | Fagor Industrial,Koop Elk, Mugaitua | |
| Comprobado | | | | |
| Escala | | | HORNO MIXTO HME/P 10-11 / 10-21 HME/P 20-11 / 20-21 | Plano numero HD-12681 -3 |
| | | | Plano hau ez dakike erabiltzeko baliozko gisa bainoiz gibe | Sustituye al Nº HD-12491 |
| | | | | Sustituido por |